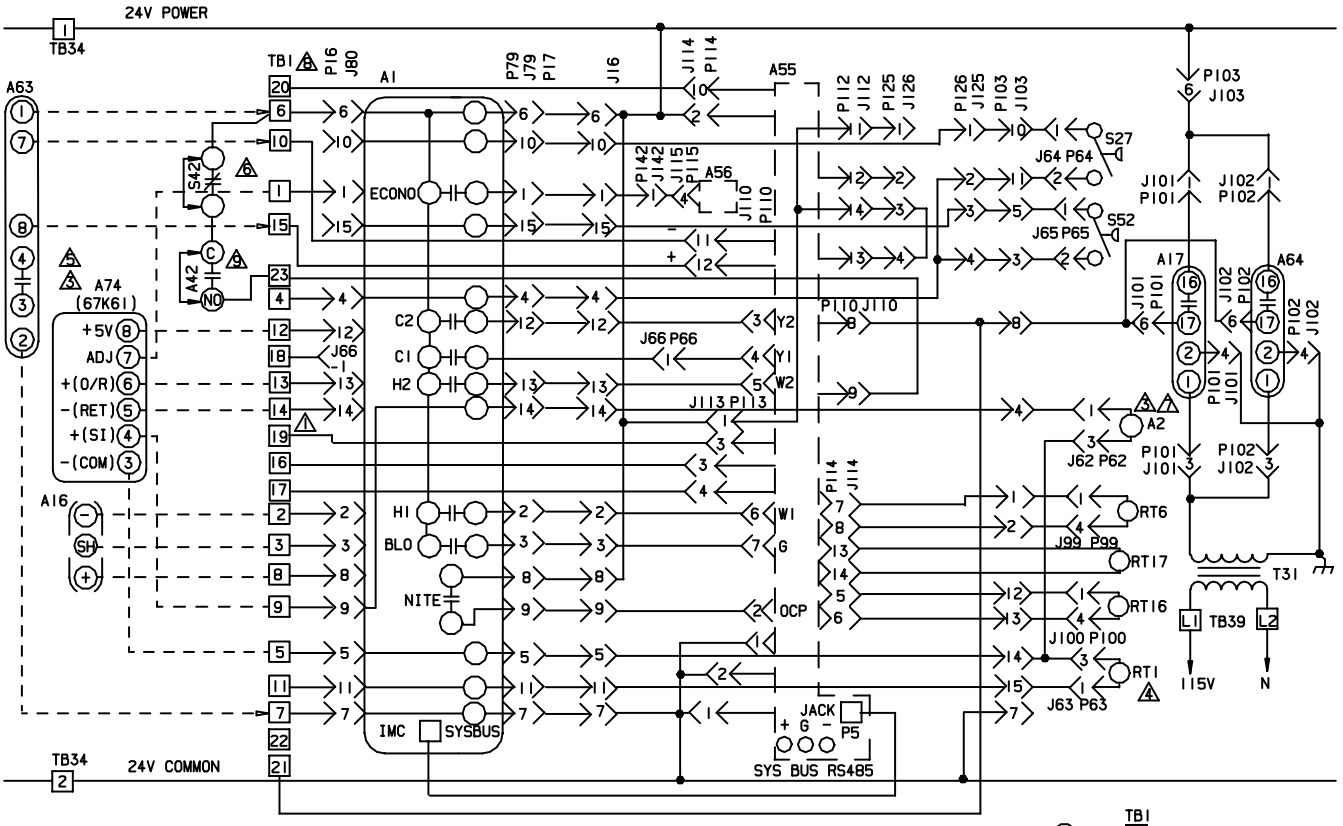

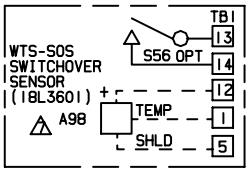

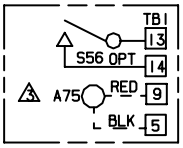

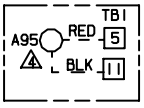

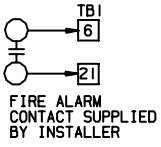

DESCRIPTION	
KEY	COMPONENT
A1	PANEL-LOGIC
A2	SENSOR-RETURN AIR (NOVAR)
A16	CONTROL-MICROPROCESSOR, EP
A17	DETECTOR-SMOKE
A42	MONITOR-PHASE PROTECTION
A55	PANEL-MAIN
A56	PANEL-ECONOMIZER
A63	SENSOR-CO2(IAQ) OPTIONAL
A64	DETECTOR-SMOKE,SUPPLY AIR
A74	SENSOR-ROOM (64K61)
A75	SENSOR-ROOM (95H5301)
A95	SENSOR-AVERAGING
A98	SENSOR-TEMP SWITCHOVER
J16	JACK-UNIT
J62	JACK-A2 RETURN AIR SENSOR
J63	JACK-RT1 DISCH. AIR SENSOR
J64	JACK-S27 FILTER SWITCH
J65	JACK-S52 FAN SWITCH
J66	JACK-COOL 1 INTERFACE
J79	JACK-PIGTAIL TO P17
J80	JACK-HEADER
J99	JACK-DISCHARGE TEMP SENSOR
J100	JACK-RETURN TEMP SENSOR
J101	JACK-SMOKE DETECTOR,RETURN AIR
J102	JACK-SMOKE DETECTOR,SUPPLY AIR
J103	JACK-SENSORS,CONTROL
J110	JACK-THERMOSTAT INPUT
J112	JACK-COOLING SENSOR INPUT
J113	JACK-BLOWER & COOL 1 CONTROL
J114	JACK-SENSOR INPUT
J115	JACK-ECONOMIZER OUTPUT
J125	JACK-BLOWER PROVING
J126	JACK-JUMPER,BLOWER PROVING
J142	JACK-ECONOMIZER HARNESS
P16	PLUG-UNIT
P17	PLUG-LOGIC PANEL
P62	PLUG-A2 RA SENSOR
P63	PLUG-RT1 DA SENSOR
P64	PLUG-S27 FILTER SWITCH

DESCRIPTION	
KEY	COMPONENT
P65	PLUG-S50 FAN SWITCH
P66	PLUG-COOL ONE
P79	PLUG-HEADER,NOVAR
P99	PLUG-DISCHARGE TEMP SENSOR
P100	PLUG-RETURN TEMP SENSOR
P101	PLUG-SMOKE DETECTOR,RETURN AIR
P102	PLUG-SMOKE DETECTOR,SUPPLY AIR
P103	PLUG-SENSORS,CONTROL
P110	PLUG-THERMOSTAT INPUT
P112	PLUG-COOLING SENSOR INPUT
P113	PLUG-BLOWER & COOL 1 CONTROL
P114	PLUG-SENSOR INPUT
P115	PLUG-ECONOMIZER OUTPUT
P125	PLUG-BLOWER PROVING
P126	PLUG-JUMPER,BLOWER PROVING
P142	PLUG-ECONOMIZER HARNESS
RT1	SENSOR-DISCHARGE
RT6	SENSOR-A55 DISCHARGE (IMC)
RT16	SENSOR-RETURN AIR TEMP
RT17	SENSOR-OUTSIDE AIR TEMP
S27	SWITCH-FILTER
S42	OVERLOAD-RELAY,BLOWER MOTOR
S52	SWITCH-AIR FLOW
S56	SWITCH-MOMENTARY OVERIDE
T31	TRANSFORMER-SMOKE DETECTOR
TB1	TERMINAL STRIP-24V CLASS II
TB34	TERMINAL STRIP-TRANSFORMER TI
TB39	TERMINAL STRIP-120V CONNECTION

A42 CONTACTS CLOSE ON POWER UP, UNLESS THERE IS A FAILURE MODE.

TB1-20 FOR DEHUMIDIFICATION CONTROL

A2 RETURN AIR SENSOR REMAINS IN PLACE WHEN A98 SWITCHOVER SENSOR WTS-SOS(18L3601) IS USED

A42 AND S42 HOOKUP FOR UNITS LESS INVERTER,SEE INVERTER WITH BYPASS DIAGRAMS FOR S42 HOOKUP

ALTERNATE A74 ROOM SENSOR, USED IN PLACE OF A75

A95 AVERAGING SENSOR MAY BE USED WITH A74 OR A75 ROOM SENSORS. DISCONNECT RT1 DISCHARGE AIR SENSOR (NOVAR) WHEN A95 IS USED

DISCONNECT A2, RETURN AIR SENSOR PLUG,P62, FROM UNIT JACK,J62, WHEN A74 OR A75 ROOM SENSOR IS USED

FOR MOTORS WITH S42 EXTERNAL OVERLOAD AND WITH A55(IMC) SOFTWARE VERSION 1.07 & NEWER

TB1-19 IS SERVICE RELAY OUTPUT(24VAC). IF USED CONNECT TO A INDICATOR LIGHT OR RELAY COIL (MAX 4VA)

DESIGNATES OPTIONAL WIRING

CLASS II FIELD WIRING

WIRING DIAGRAM	7/05
ACCESSORIES	
NOVAR ETM-2051 "S" SERIES UNITS FOR WALMART	
TEMPERATURE CONTROL SECTION C15	
Supersedes Form No.	New Form No. 535,050W

© 2005

Litho U.S.A.