GAS FURNACES

EL280DFE

ELITE® SERIES

Downflow - Two-Stage Heat - Constant Torque Blower - 60 Hz

RESIDENTIAL PRODUCT SPECIFICATIONS

Bulletin No. 210872
December 2024
Supersedes all previous versions

ELITE® SERIES

AFUE - 80%
Input - 66,000 to 88,000 Btuh
Nominal Add-on Cooling - 1.5 to 4 Tons

MODEL NUMBER IDENTIFICATION

EL 2 80 DF 070 E 36 A

- **Unit Type** — EL = Elite® Series
- **Stages** — 2 = Two-Stage
- **AFUE** — 80 = 80%
- **Configuration** — DF = Downflow
- **Nominal Gas Heat Input** — 070 = 66,000 Btuh; 090 = 88,000 Btuh
- **Blower** — E = High Efficiency Constant Torque Blower Motor
- **Nominal Add-On Cooling Capacity** — 36 = 1.5-3.5 tons; 48 = 3-4 tons
- [1] **Cabinet Width** — A = 14-1/2 in.; B = 17-1/2 in.

[1] Downflow indoor coils with the same letter designation will physically match the furnace **supply air opening**.

FEATURE HIGHLIGHTS

1. Lennox Duralok™ Heat Exchanger
2. Inshot Burners
3. SureLight® Hot Surface Ignitor
4. Two-Stage Gas Control Valve
5. Two-Speed Combustion Air Inducer
6. Flame Rollout Switches
7. SureLight® Integrated Furnace Control
8. Power Saver™ Constant Torque Blower
9. Insulated Cabinet
10. Safety Interlock Switch
11. Gas Piping And Electrical Inlets

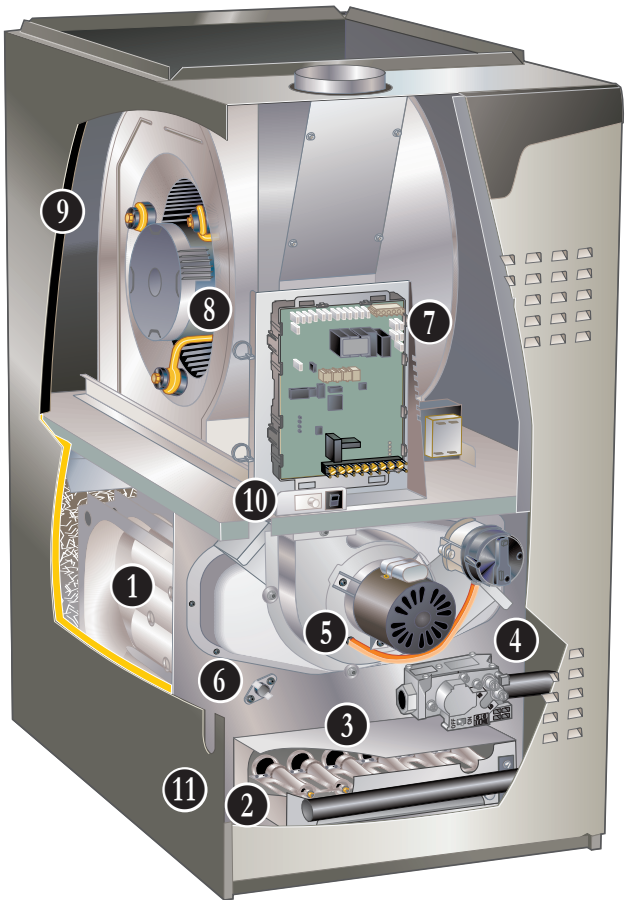

NOTE - EL280DFE FURNACES ARE NOT AVAILABLE IN CANADA!

CONTENTS

Blower Data 12
Approvals And Warranty 3
Dimensions 9
- Furnace/Coil Combined Dimensions 11
- Optional Accessories 10
- Unit 9
Features 3
Gas Heat Accessories 8
High Altitude Derate 8
Installation Clearances 8
Model Number Identification. 1
Optional Accessories - Order Separately 7
Specifications 7

APPROVALS AND WARRANTY

APPROVALS

- AHRI Certified
- CSA International Certified
- Tested and rated according to US DOE test procedures and FTC labeling regulations
- ISO 9001 Registered Manufacturing Quality System
- Blower data from unit tests conducted in Lennox Laboratory air test chamber

NOTE - This furnace has not been CSA International design certified for installation in mobile homes, recreational vehicles, or outdoors.

California Only

- These furnaces **do not meet** the South Coast Air Quality Management District (SCAQMD) Rule 1111 and San Joaquin Valley Air Pollution Control District (SJVAPCD) Rule 4905 NOx emission limit (14 ng/J) and cannot be installed within the SCAQMD and SJVAPCD areas

WARRANTY

- Duralok™ Aluminized Steel Heat Exchanger:
  - Limited twenty years in residential applications
  - Limited ten years in non-residential applications
- All other covered components:
  - Limited five years in residential installations
  - Limited one year in non-residential installations

NOTE - Refer to Lennox® Basic Limited Warrenty at www.Lennox.com for additional details.

FEATURES

APPLICATIONS

- Input capacities of 66,000 and 88,000 Btuh
- Energy efficiency (AFUE) -80%
- Lennox add-on indoor coils, high-efficiency air cleaners and humidifiers can easily be added to furnace
- Shipped factory assembled with all controls installed and wired
- Each unit factory test operated to ensure proper operation

HEATING SYSTEM

1 Lennox Duralok™ Heat Exchanger Assembly

- Heavy gauge aluminized steel heat exchanger
- Crimped seam clamshell type design
- Designed for normal expansion and contraction
- Minimum resistance to air flow
- Heat exchanger has been laboratory life cycle tested in excess of industry standards
- Compact size of heat exchanger permits low overall design of furnace cabinet

2 Inshot Burners

- Aluminized steel inshot burners provide efficient, trouble-free operation
- Burner venturi mixes air and gas in correct proportion for proper combustion
- Burner assembly is removable from the unit as a single component for ease of service

3 SureLight® Hot Surface Ignitor

- Tough, reliable, long-life, trouble-free performance
- Silicon nitride ignitor
- Cemented to steatite block for protection against current leakage
- Ignition leads are constructed of nickel plated copper and are enclosed in high temperature Teflon® insulation for dependable operation

4 Two-Stage Gas Control Valve

- 24 volt redundant combination two-stage gas control valve combines manual shut off switch (On-Off), automatic electric valve (dual) and gas pressure regulation into a compact combination control

5 Two-Speed Combustion Air Inducer

- Heavy duty, permanent split capacitor (PSC) two-speed blower prepurges heat exchanger and safely vents flue products
- Dual pressure switches (low fire/high fire) prove blower operation before allowing gas valve to open
- Operates only during heating cycle

6 Flame Rollout Switch

- Factory installed on burner box
- Switch provides protection from abnormal operating conditions
- Manual reset

HEATING SYSTEM (continued)

Limit Controls

- Primary limit factory installed on vestibule panel
- Secondary limit factory installed on blower housing
- Automatic reset

Optional Accessories

High Altitude Pressure Switch Kit

- Required on most units for proper unit operation at altitudes from 4501 to 10,000 ft.

Natural Gas to LPG/Propane Conversion Kit

- Required for field changeover from natural gas to LPG/Propane

LPG/Propane to Natural Gas Conversion Kit

- Required for field changeover from LPG/Propane to natural gas

CONTROLS

7 SureLight® Integrated Two-Stage Furnace Control

- Contains all necessary controls and relays to operate furnace
- Combustion air inducer is operated by the integrated furnace control
- Prior to ignition, a pre-purge cycle for 15 seconds is initiated
- After the main burners are turned off, a post-purge cycle for 5 seconds is run
- Flame sensor assures safe and reliable operation
- Should loss of flame occur the integrated furnace control will initiate 4 re-attempts at ignition before locking out unit operation for 60 minutes
- Watchguard type circuit automatically resets ignition controls after one hour of continuous thermostat demand after unit lockout, eliminating nuisance calls for service
- Jumper settings for single or two stage thermostat operation
- Two selectable 2nd stage recognition times (10 and 15 minutes) are available when the furnace is used with a single stage thermostat
- When used with a two stage thermostat, furnace will only initiate second stage operation with a second stage thermostat demand
- Fan control consists of adjustable blower timed-off delay (60, 90, 120, 180 seconds - factory setting 90 seconds) and fixed blower timed-on delay (30 seconds heating, 2 seconds cooling)
- For air-conditioning applications, blower is automatically energized on thermostat demand for cooling
- Two accessory terminals furnished for additional power supply requirements for 120 volt (less than 1 amp) power humidifiers and powered air cleaners
- A separate 24V accessory terminal is also provided for low voltage accessories
- Display LED - Seven segment LED displays alphanumeric information to diagnostics as well as system operation and status
  - Diagnostic codes are held in non-volatile memory, immune from power interruptions
  - Holds up to ten diagnostic codes in order of occurence for recall on demand

24 Volt Transformer (40VA)

- Furnished and factory installed on outside of control box
- Circuit breaker (furnished) is wired in series

Field Wiring Make-Up Box

- Furnished for line voltage wiring
- Factory installed internally on left side of furnace
- Box may be installed internally on right side of furnace

FEATURES

Optional Accessories

E30 Smart Wi-Fi Thermostat

- Wi-Fi enabled, electronic 7-day, universal, multi-stage, programmable, touchscreen thermostat
- 3 Heat/2 Cool
- Auto-changeover
- Controls dehumidification during cooling mode and humidification during heating mode

- Offers enhanced capabilities including humidification / dehumidification / dewpoint measurement and control, Humiditrol® control, and equipment maintenance reminders
- Easy to read 7 in. color touchscreen (measured diagonally)
- LCD display with backlight shows the current and set temperature, time, inside relative humidity, system status (operating mode and schedules) and outside temperature (optional outdoor sensor required)
- Smooth Setback Recovery starts system early to achieve setpoint at start of program period
- Compressor short-cycle protection (5 minutes)
- Up to four separate schedules are available plus Schedule IQ™
- One-Touch Away Mode - A quick and easy way to set the cooling and heating setpoints while away
- Smart Away™ - Uses geo-fencing technology to determine when the homeowner is within a predetermined distance from the home to operate the system when leaving, away and arriving
- Wi-Fi remote monitoring and adjustment through a home wireless network for desktop PCs, laptops and apps for smartphones or tablets
- Smart home automation compatible with Apple HomeKit™, Amazon Alexa®, Google Assistant and IFTTT
- Service Dashboard features online real-time monitoring of installed Lennox® thermostats
- High Definition Color Display with Subbase, Smart Hub Controller, wallplate (for retrofit installations) furnished for easy installation
- See the Lennox® E30 Smart Wi-Fi Thermostat Product Specifications bulletin for more information

CONTROLS (continued)

Optional Accessories (continued)

Remote Outdoor Temperature Sensor

- Used with Lennox® E30 Smart Thermostat
- When installed outdoors, sensor allows thermostat to display outdoor temperature

NOTE - Sensor is required for Enhanced Dehumidification Control (EDA) applications.

NOTE - The outdoor sensor is furnished as standard with Lennox® Communicating outdoor units, optional for conventional units.

Thermostat

- Thermostat is not furnished with unit
- See Lennox Price Book for selection

Furnace Twinning Panel

- Required to operate two identical furnaces simultaneously from a single thermostat
- For single stage conventional (1 heat/1 cool), multi-stage conventional (2 heat/2 cool) and heat pump (3 heat/2 cool) equipment
- Can be used with common or separate ducted systems
- Contains PC Control Board with terminal strip connections for thermostat and HVAC equipment
- LEDs indicate system operating status
- Uses standard 18-gauge thermostat wire
- Power Supply: 24 VAC, 40VA (transformer not furnished)
- Mounting base with hardware furnished
- Dimensions (H x W x D): 10 x 5 x 2 in.

NOTE - Only identical furnaces should be twinned in order to ensure that both furnace blowers start at the same time. If furnaces are not identical, back draft dampers can be installed in either the supply or return duct.

Up to four identical furnaces can be twinned. Requires two panels that are wired together.

Furnace Twinning Kit

- Required to operate two furnaces simultaneously.
- Kit consists of twinning relays, quick connect terminals and mounting hardware
- Used for two-stage heating/single-stage cooling with either a single-stage or two-stage thermostat

Transformer (75VA)

- Recommended when furnace is used with zoning or defrost thermostats and other 24V accessories requiring a higher VA rating
- Circuit breaker (furnished) is wired in series
- Replaces the standard 40VA transformer

FEATURES

BLOWER

- Direct drive blower
- Statically and dynamically balanced
- Resiliently mounted
- Blower assembly easily removed for servicing

8 Power Saver™ Constant Torque Blower Motor

- DC Brushless Motor
- High Efficiency Constant Torque
- ECM (Electronically Commutated Motor)
- Motor is programmed to provide constant torque at each of the selectable speeds
- Motor is controlled by the Integrated Furnace Control
- Blower speeds are easily changed on the integrated furnace control
- See Blower Data tables

CABINET

- Low-profile, narrow width cabinet allows easy installation in downflow applications
- Heavy-gauge, cold rolled steel construction
- Pre-painted cabinet finish
- Flanges provided on return air opening for ease of plenum connection
- 9 Insulated with foil faced insulation on sides and back of heating compartment and mat faced insulation in blower compartment
- Sealed blower compartment
- Inner blower compartment access panel seals blower compartment from air leakage
- Cabinet door can be removed without any tools
- Complete service access
- 10 Safety interlock switch automatically shuts off power to unit when inner blower compartment access panel is removed
- 11 Gas piping and electrical inlets are provided in both sides of cabinet

Coil Match-Up

- All Lennox downflow indoor coils will physically match the furnace **supply air opening** with the same letter designation (A, B, C, D) as in the furnace model number

Low Leakage Cabinet

- All models have less than 2% air leakage and meet ANSI/ASHRAE Standard 193-2010 "Method of Test for Determining the Air Tightness of HVAC Equipment"

Optional Accessories

Downflow Combustible Flooring Base

- Required for heating only units installed on combustible flooring
- Not required in add-on cooling applications
- See Dimension drawing

FILTER (not furnished)

- Filter and provisions for external mounting must be field provided

Optional Accessories

Downflow Filter Kit

- Filter cabinet mounts directly on top of furnace
- "A" width cabinet includes one filter
- "B" width cabinets include two filters
- Filter rails are furnished
- Front access for servicing
- Cleanable filter(s) are furnished

REFRIGERATION DETECTION SYSTEM (RDS)

Optional Accessories

Refrigerant Detection System (RDS) Coil Sensor Kit

- Complies with UL 60335-2-40 approved standard
- Required for field installation for all systems using R-454B refrigerant if sensor is not furnished with coil
- Consists of Refrigerant Detection System (RDS) sensor, lineset sleeves, mounting brackets and A2L labeling
- Sensor ensures safe operation for systems equipped with R-454B refrigerant
- Sensor will detect anu R-454B refrigerant

Refrigerant Detection System (RDS) Blower Control Board

Communicating Blower Control Board (Universal)

- Communicating Blower Control Board and Sensor can be used universally with any Lennox® communicating furnace or any non-communicating 24 volt furnace

Non-Communicating Blower Control Board

- Non-Communicating Blower Control Board and Sensor can be used with any non-communicating 24 volt furnace

Standard Features

- Complies with UL 60335-2-40 approved standard
- Required for all systems using R-454B refrigerant
- Connects to the RDS sensor furnished with the RDS Coil Sensor Kit
- Supports up to two RDS Sensors (factory setting)
- Used as an interface between indoor unit and thermostat to control system
- Ensures safe operation for systems equipped with R-454B refrigerant
- If R-454B refrigerant is detected, the refrigerant detection system will stop compressor and/or heating operating and operate the blower to reduce concentrations in the conditioned space
- Once safe levels are reached the HVAC system will resume normal operation
- Multi-color LED for system status and as an aid in troubleshooting
  - Flashing LED codes for system status (Green/Blue) and diagnosing Sensor errors (Red)
- Alarm relay can trigger an external alarm if R-454B refrigerant is detected
- Zone relay opens all zone dampers (if part of a zoning system) if R-454B refrigerant is detected
- Power is disabled to non-communicating thermostats to prevent demand if R-454B refrigerant is detected
- On system start-up blower will run for five minutes and any thermostat demands are disabled
- Dimensions (H x W x D): 7-7/16 x 7-7/16 x 2-1/2 (189 x 189 x 127 mm)

NOTE - See Refrigerant Detection System (RDS) Components Table on page 9.

See the CK40 Indoor Coil Product Specifications bulletins for more information.

Refer to the Installation Instructions for additional information.

SPECIFICATIONS

Gas Heating Performance		**Model No.**	**EL280DF070E36A**	**EL280DF090E48B**
		[1] AFUE	80%	80%
	High Fire	Input - Btuh	66,000	88,000
		Output - Btuh	52,000	69,000
		Temperature rise range - °F	30 - 60	35 - 65
		Gas Manifold Pressure (in. w.g.) Nat. Gas / LPG/Propane	3.5 / 10.0	3.5 / 10.0
	Low Fire	Input - Btuh	43,000	57,000
		Output - Btuh	35,000	46,000
		Temperature rise range - °F	20 - 50	20 - 50
		Gas Manifold Pressure (in. w.g.) Nat. Gas / LPG/Propane	1.7 / 4.5	1.7 / 4.5
High static - in. w.g.		Heating	0.5	0.5
		Cooling	0.5	0.5
Connections in.		Flue connection - in. round	4	4
		Gas pipe size IPS	1/2	1/2
Indoor Blower		Wheel nominal diameter x width - in.	10 x 8	10 x 10
		Motor output - hp	1/2	3/4
		Tons of add-on cooling	1.5 - 3.5	3 - 4
		Air Volume Range - cfm	400 - 1475	780 - 1700
Electrical Data		Voltage	120 volts - 60 hertz - 1 phase	
		Blower motor full load amps	6.1	8.2
		Maximum overcurrent protection	15	15
Shipping Data		lbs. - 1 package	123	142

NOTE - Filters and provisions for mounting are not furnished and must be field provided.

[1] Annual Fuel Utilization Efficiency based on DOE test procedures and according to FTC labeling regulations. Isolated combustion system rating for non-weatherized furnaces.

OPTIONAL ACCESSORIES - ORDER SEPARATELY

	"A" Width Models	**"B" Width Models**
CABINET		
Downflow Combustible Flooring Base	**11M59**	**11M60**
CONTROLS		
E30 Smart Wi-Fi Thermostat	**20A65**	**20A65**
Remote Outdoor Temperature Sensor	**X2658**	**X2658**
Furnace Twinning Panel	**Y3653**	**Y3653**
Furnace Twinning Kit	**16W72**	**16W72**
Transformer (75VA)	**27J32**	**27J32**
DOWNFLOW FILTER KITS		
Downflow Filter Kit	**51W06**	**51W07**
No. and Size of filter - in.	(1) 20 x 20 x 1	(2) 20 x 16 x 1

GAS HEAT ACCESSORIES

Input	High Altitude Pressure Switch Kit			Natural Gas to LPG/Propane Kit	LPG/Propane to Natural Gas Kit	Natural Gas High Altitude Orifice Kit	LPG/Propane High Altitude Orifice Kit
	0 - 4500 ft.	4501 - 7500 ft.	7501 - 10,000 ft.	0 - 7500 ft.	0 - 7500 ft.	7501 - 10,000 ft.	7501 - 10,000 ft.
070	No Change	No Change	73W36	11K51	77W09	73W37	11K46
090	No Change	No Change	73W36	11K51	77W09	73W37	11K46

REFRIGERANT DETECTION SYSTEM (RDS) COMPONENTS

Description		Order No.
Refrigerant Detection System (RDS) Coil Sensor Kit		26Z69
Refrigerant Detection System (RDS) Blower Control Board	Any Lennox® Communicating Furnace or any Non-Communicating 24V Furnace (Universal)	27A03
	Any Non-Communicating 24V Furnace	27A02

NOTE - Communicating Blower Control Board and Sensor can be used universally with Lennox® communicating furnace or any non-communicating 24 volt furnace. Non-Communicating Blower Control Board and Sensor can be used with any non-communicating 24 volt furnace.

HIGH ALTITUDE DERATE

NOTE - Units may be installed at altitudes up to 4500 ft. above sea level without any modifications. At altitudes above 4500 ft. units must be derated to match information in the shaded area shown below.

NOTE - This is the only permissible derate for these units.

Input	Gas Manifold Pressure (Outlet) in. w.g.											
	0 - 4500 Feet				4501 -7500 Feet				7501 - 10,000 ft.			
	Natural Gas		LPG/Propane		Natural Gas		LPG/Propane		[1] Natural Gas		LPG/Propane	
	High Fire	Low Fire	High Fire	Low Fire	High Fire	Low Fire	High Fire	Low Fire	High Fire	Low Fire	High Fire	Low Fire
070	3.5	1.7	10	4.5	3.2	1.5	10	4.5	3.5	1.7	10	4.5
090	3.5	1.7	10	4.5	3.0	1.5	10	4.5	3.5	1.7	10	4.5

[1] Natural Gas High Alitude Orifice Kit required.

INSTALLATION CLEARANCES

Vent Type	Type B1	Type C
Sides	0 inches (0 mm)	[1] 0 inches (0 mm)
Rear	0 inches (0 mm)	0 inches (0 mm)
Top	1 inch (25 mm)	1 inch (25 mm)
Front	2-1/4 inches (57 mm)	2-1/4 inches (57 mm)
Front (alcove)	24 inches (610 mm)	24 inches (610 mm)
Front (service)	24 inches (610 mm)	24 inches (610 mm)
Floor	[2] Combustible	[2] Combustible
Flue	1 inch (25 mm)	6 inches (152 mm)

NOTE - Air for combustion must conform to the methods outlined in the National Fuel Gas Code (NFPA 54/ANSI-Z223.1).

NOTE - In the U.S. flue sizing must conform to the methods outlined in the current National Fuel Gas Code (NFPA 54/ANSI-Z223.1) or applicable provisions of local building codes.

[1] Left side requires 4 in. clearance if single wall vent is used on 14-1/2 in. “A” width cabinets, and 2 in. clearance on 17-1/2 in. “B” width cabinets.

[2] Clearance for installation on combustible floor if optional Downflow Combustible Flooring Base is installed between furnace and combustible floor. Not required in add-on cooling applications if installed in accordance with local codes or National Fuel Gas Code ANSI-Z223.1.

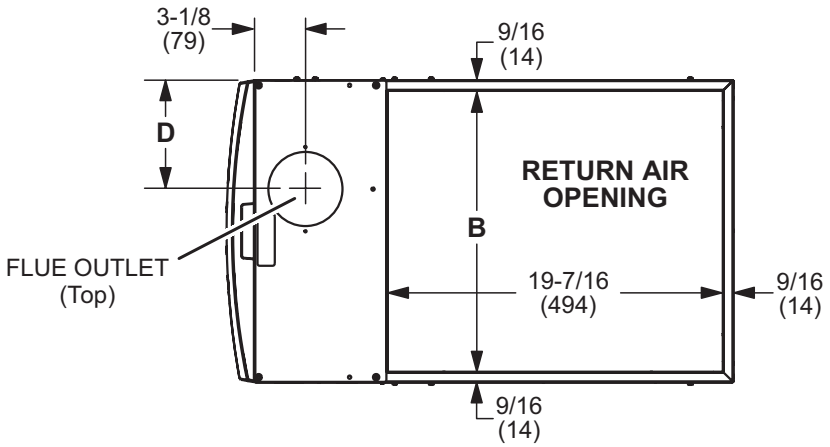

TOP VIEW

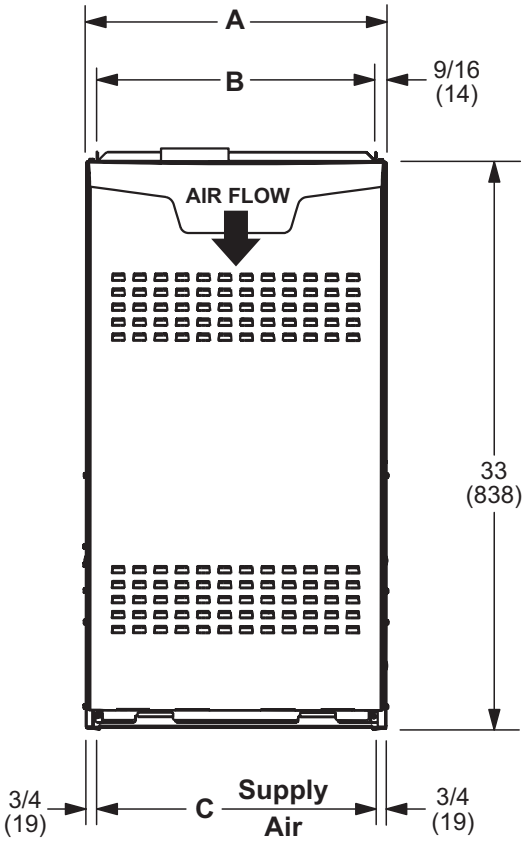

FRONT VIEW

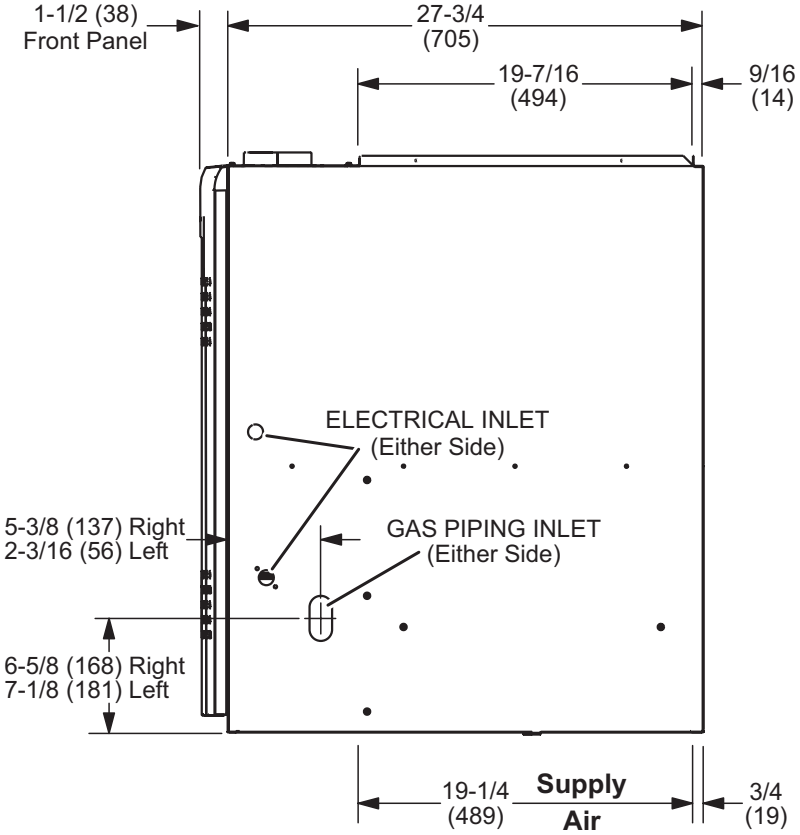

SIDE VIEW

Model No.	A		B		C		D	
	in.	mm	in.	mm	in.	mm	in.	mm
EL280DF070E36A	14-1/2	368	13-3/8	340	13	330	4-3/4	121
EL280DF090E48B	17-1/2	446	16-3/8	416	16	406	6-1/4	159

DOWNFLOW COMBUSTIBLE FLOORING BASE

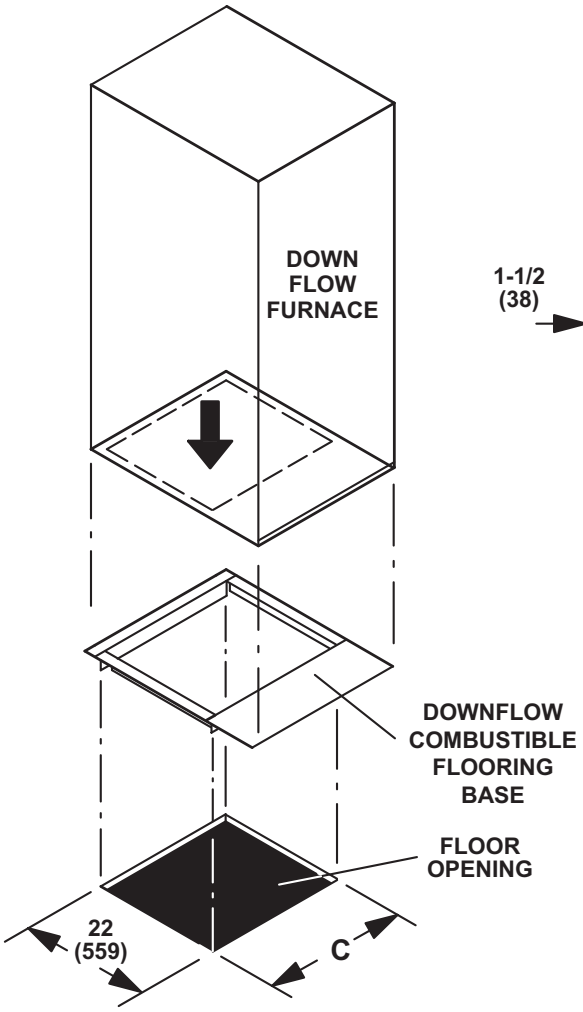

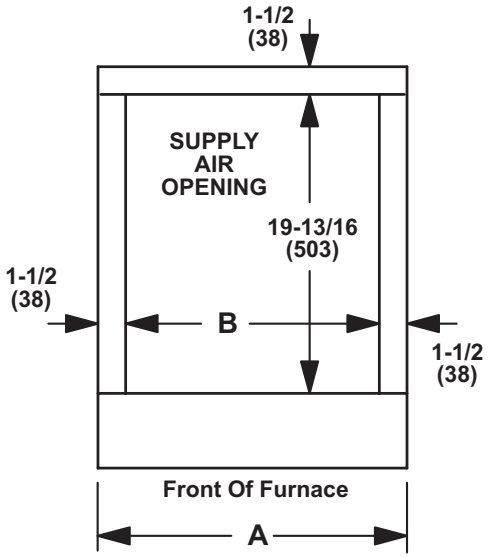

TOP VIEW

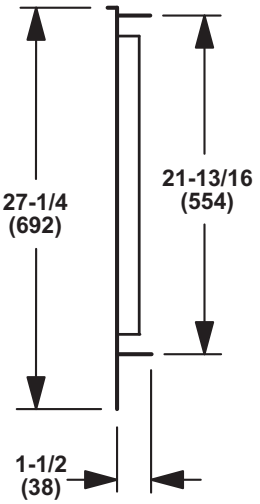

SIDE VIEW

Cabinet Width	Catalog Number	A		B		C	
		in.	mm	in.	mm	in.	mm
A	**11M59**	16-9/16	421	13-9/16	344	15-3/4	400
B	**11M60**	19-9/16	497	16-9/16	421	18-3/4	476

DOWNFLOW FILTER CABINET

"A" WIDTH FURNACES (Single Filter)

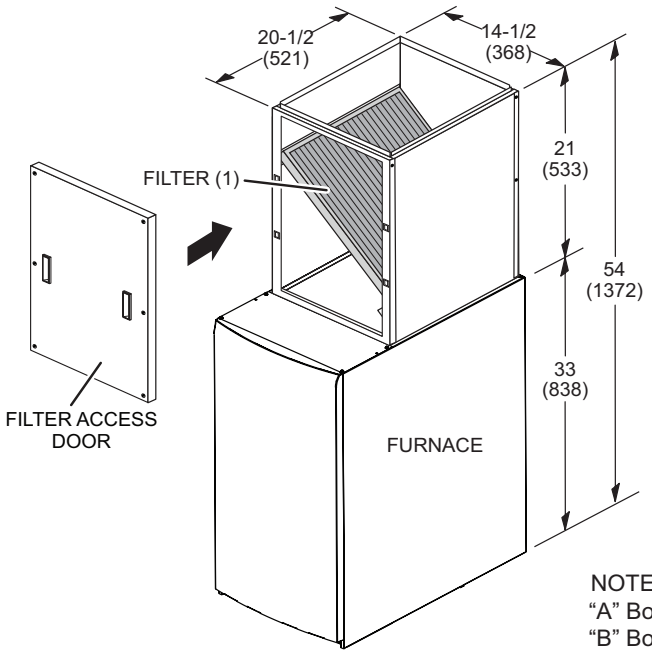

"B" WIDTH FURNACES (Two Filters)

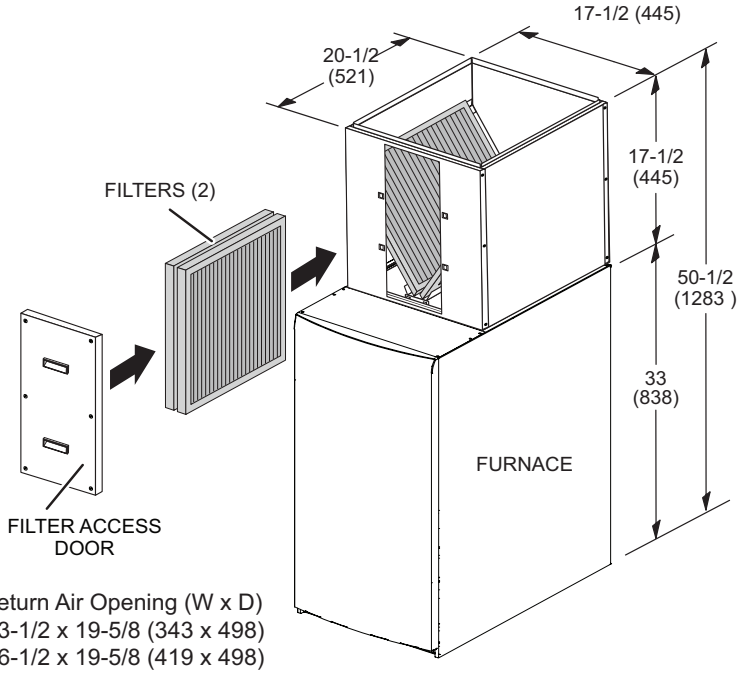

NOTE: Return Air Opening (W x D)
"A" Box 13-1/2 x 19-5/8 (343 x 498)
"B" Box 16-1/2 x 19-5/8 (419 x 498)

DIMENSIONS FURNACE/COIL COMBINED DIMENSIONS

Model		Coil/Furnace Width		Coil Height		Overall Height	
CK40DT	**CRX35**	**in.**	**mm**	**in.**	**mm**	**in.**	**mm**
CK40DT-24A	CRX35-24A	14-1/2	368	18	457	51	1295
CK40DT-24B	CRX35-24B	17-1/2	445	18	457	51	1295
CK40DT-30/36B	CRX35-30/36B	17-1/2	445	23-1/2	597	56-1/2	1435
CK40DT-42B	CRX35-42B	17-1/2	445	23-1/2	597	56-1/2	1435

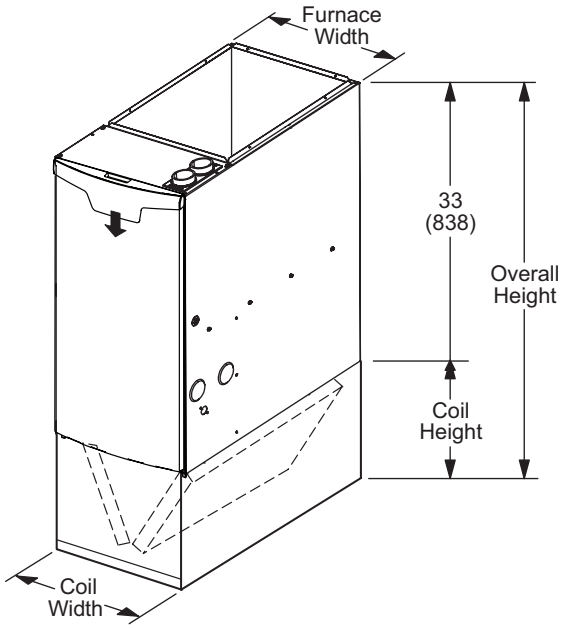

BLOWER DATA

EL280DF070E36A PERFORMANCE (Less Filter)

External Static Pressure in. w.g.	Air Volume / Watts at Various Blower Speeds									
	High (Black)		Medium-High (Brown)		Medium (Blue)		Medium-Low (Yellow)		Low (Red)	
	cfm	Watts	cfm	Watts	cfm	Watts	cfm	Watts	cfm	Watts
0.00	1484	336	1347	262	1211	194	995	111	803	74
0.10	1439	351	1322	273	1178	201	950	113	768	75
0.20	1393	367	1296	285	1145	209	905	116	734	76
0.30	1380	371	1256	291	1113	215	860	123	680	83
0.40	1353	382	1231	301	1081	222	823	131	634	87
0.50	1320	388	1197	309	1046	230	781	135	576	93
0.60	1298	398	1174	315	1011	237	731	143	525	99
0.70	1255	405	1138	324	977	246	694	145	470	101
0.80	1191	368	1105	331	939	252	647	152	404	106
0.90	1060	351	1079	341	900	259	591	159	355	114
1.00	908	326	999	317	880	263	545	163	308	114

EL280DF090E48B PERFORMANCE (Less Filter)

External Static Pressure in. w.g.	Air Volume / Watts at Various Blower Speeds									
	High (Black)		Medium-High (Brown)		Medium (Blue)		Medium-Low (Yellow)		Low (Red)	
	cfm	Watts	cfm	Watts	cfm	Watts	cfm	Watts	cfm	Watts
0.10	1763	393	1575	277	1450	220	1367	186	1260	143
0.20	1735	410	1537	288	1407	231	1322	196	1207	153
0.30	1707	427	1498	299	1365	241	1277	206	1154	162
0.40	1656	439	1446	309	1316	251	1225	215	1091	171
0.50	1617	449	1400	323	1273	260	1185	225	1044	180
0.60	1586	460	1352	332	1221	271	1133	232	989	186
0.70	1542	473	1315	345	1181	280	1078	243	928	196
0.80	1461	448	1273	354	1134	287	1037	253	886	202
0.90	1320	347	1228	364	1092	298	981	261	824	213
1.00	1083	309	1165	363	1034	309	926	269	746	220

REVISIONS

Sections	Description of Change
Gas Heat Accessories	Updated High Altitude Pressure Switch Kit usage.

Visit us at www.lennox.com
For the latest technical information, www.LennoxPros.com
Contact us at 1-800-4-LENNOX

NOTE - Due to Lennox' ongoing commitment to quality, Specifications, Ratings and Dimensions subject to change without notice and without incurring liability.
Improper installation, adjustment, alteration, service or maintenance can cause property damage or personal injury.
Installation and service must be performed by a qualified installer and servicing agency.

©2024 Lennox Industries, Inc.