538100-02

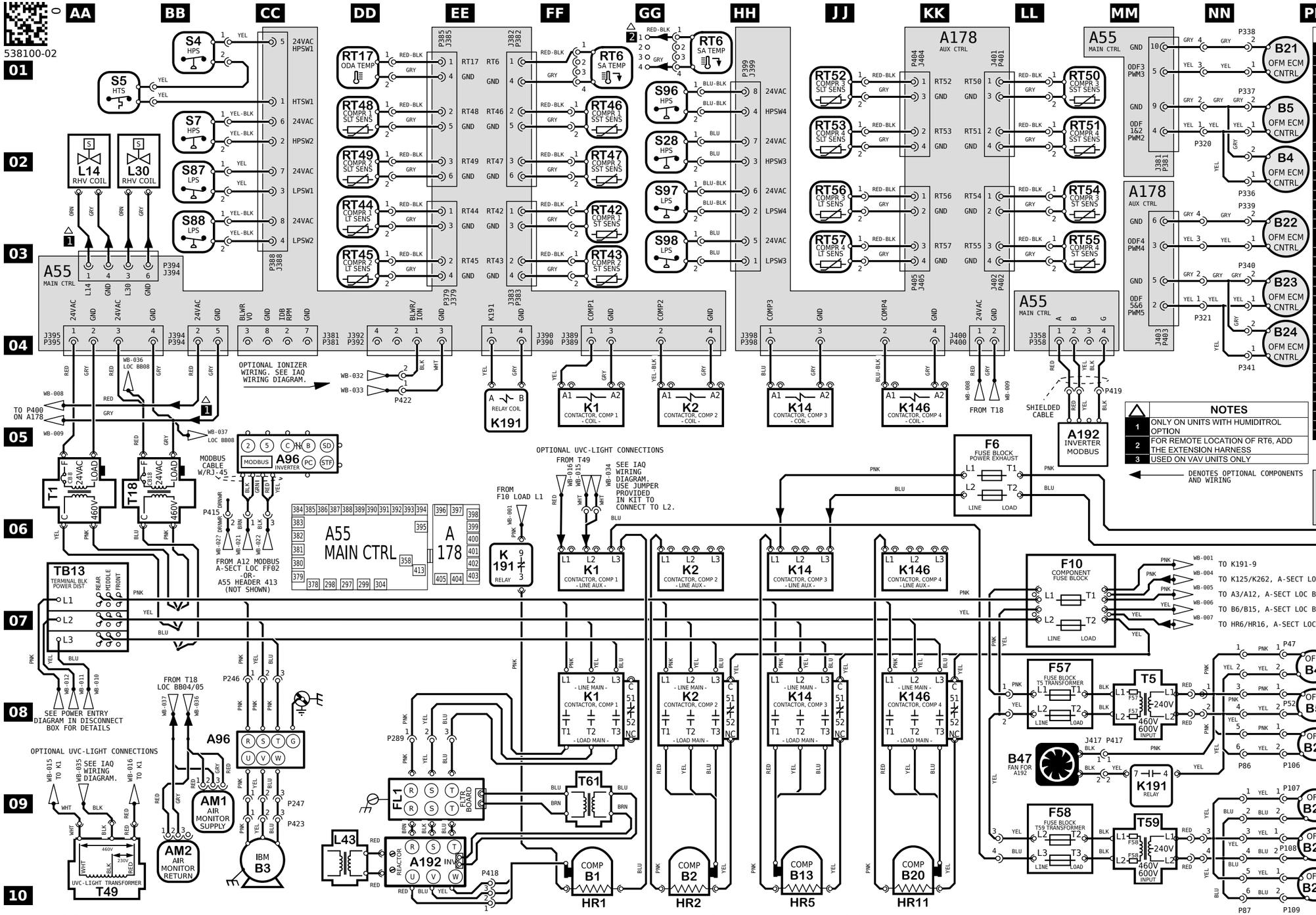

KEY LIST

LOCATION	COMPONENT DESCRIPTION	
SS06	A30	TRANSDUCER, SA DUCT PRESSURE
CC05/08	A96	CONTROL INVERTER, BLOWER
MM05,EE10	A192	INVERTER, COMPRESSOR 1
BB09	AM1, AM2	AIR MONITOR, SUPPLY/RETURN, IAQ-TVOC
FF/GG/JJ/KK10	B1, B2, B13, B20	COMPRESSOR 1, 2, 3, 4
CC10	B3	MOTOR, BLOWER
PP02/08 PP01/03/03/09 PP03/09/04/10	B4, B5, B21, B22, B23, B24	MOTOR, OUTDOOR FAN 1, 2, 3, 4, 5, 6
QQ09	B10, B11	MOTOR, EXHAUST FAN 1, 2
LL09	B47	MOTOR, COOLING FAN FOR A192
QQ09	C6, C8	CAPACITOR, EXHAUST FAN 1, 2
LL05	F6	FUSE, EXHAUST FAN
LL07	F10	FUSE, COMPONENT
LL08	F57	FUSE, T5 TRANSFORMER PRIMARY
LL09	F58	FUSE, T59 TRANSFORMER PRIMARY
EE09	FL1	FILTER BOARD
FF/GG/JJ/KK10	HR1, HR2, HR5, HR11	HEATER, COMPRESSOR 1, 2, 3, 4
FF/GG05,06,08 JJ/KK05,06,08	K1, K2, K14, K146	CONTACTOR, COMPRESSOR 1, 2, 3, 4
QQ07	K65, K231	RELAY, EXHAUST FAN 1, 2
EE05/06,MM09	K191	RELAY, CRANKCASE HEATER 1
EE05	K203	RELAY, INVERTER CONTROL
AA02	L14, L30	VALVE, SOLENOID, REHEAT COIL 1, 2
DD09	L43	REACTOR INVERTER
GG01	RT6	SENSOR, A55 DISCHARGE (IMC)
DD01	RT17	SENSOR, OUTSIDE AIR TEMP
GG03,MM02/03	RT42, RT43, RT54, RT55	SENSOR, SUCTION TEMP., COMP 1, 2, 3, 4
DD03,JJ02/03	RT44, RT45, RT56, RT57	SENSOR, LIQUID TEMP., COMP 1, 2, 3, 4
GG02,MM01/02	RT46, RT47, RT50, RT51	SENSOR, SAT. SUCT TEMP., COMP 1, 2, 3, 4
DD01/02,JJ01/02	RT48, RT49, RT52, RT53	SENSOR, SAT. LIQUID TEMP., COMP 1, 2, 3, 4
BB01/02,GG02/01	S4, S7, S28, S96	LIMIT, HI PRESS. SWITCH, COMP 1, 2, 3, 4
AA01	S5	LIMIT, HI TEMP. SWITCH, COMP 1
BB02/03,GG03/02	S87, S88, S98, S97	SWITCH, LOW PRESS., COMP. 1, 2, 3, 4
AA06	T1	TRANSFORMER, CONTROL
MM08/09	T5, T59	TRANSFORMER, OUTDOOR FAN MOTOR
BB06	T18	TRANSFORMER, CONTACTOR
AA10	T49	TRANSFORMER, UVC-LIGHT POWER
FF09	T61	TRANSFORMER, INV INTERNAL POWER
AA07	TB13	TERMINAL STRIP, POWER DISTRIBUTION

NOTES

1	ONLY ON UNITS WITH HUMIDITROL OPTION
2	FOR REMOTE LOCATION OF RT6, ADD THE EXTENSION HARNESS
3	USED ON VAV UNITS ONLY

DENOTES OPTIONAL COMPONENTS AND WIRING

WARNING

DISCONNECT ALL POWER BEFORE SERVICING.

ELECTRIC SHOCK HAZARD, CAN CAUSE INJURY OR DEATH. UNIT MUST BE GROUNDED IN ACCORDANCE WITH NATIONAL AND LOCAL CODES.

FOR USE WITH COPPER CONDUCTORS ONLY. REFER TO UNIT RATING PLATE FOR MINIMUM CIRCUIT AMPACITY AND MAXIMUM OVERCURRENT PROTECTION SIZE.

IF ANY WIRE IN THIS APPLIANCE IS REPLACED, IT MUST BE REPLACED WITH WIRE OF LIKE SIZE, RATING AND INSULATION THICKNESS.

© 2019

Model: LCM, LGM 210U, 240U, 300U - G-VOLT
COOLING - MSAV NO BYPASS -OR- VAV - 4 COMPRESSORS, 6 CONDENSER FANS

Voltage: 460/3/60 (G)
Supersedes: 538100-01 Form No: 538100-02 Rev: 0

WIRING DIAGRAM FLOW

HEATING	COOLING	COOLING	ACCS	ACCS
SECTION A	SECTION B	SECTION B3	SECTION C	SECTION D

10x17 CUT SIZE

REV	EC NO.	DATE	BY	APVD	REVISION NOTE
---	CN-010356E	08-02-2022	MXR6	JAL21	ORIGINATED AT PD&R CARROLLTON, TX

538100-02

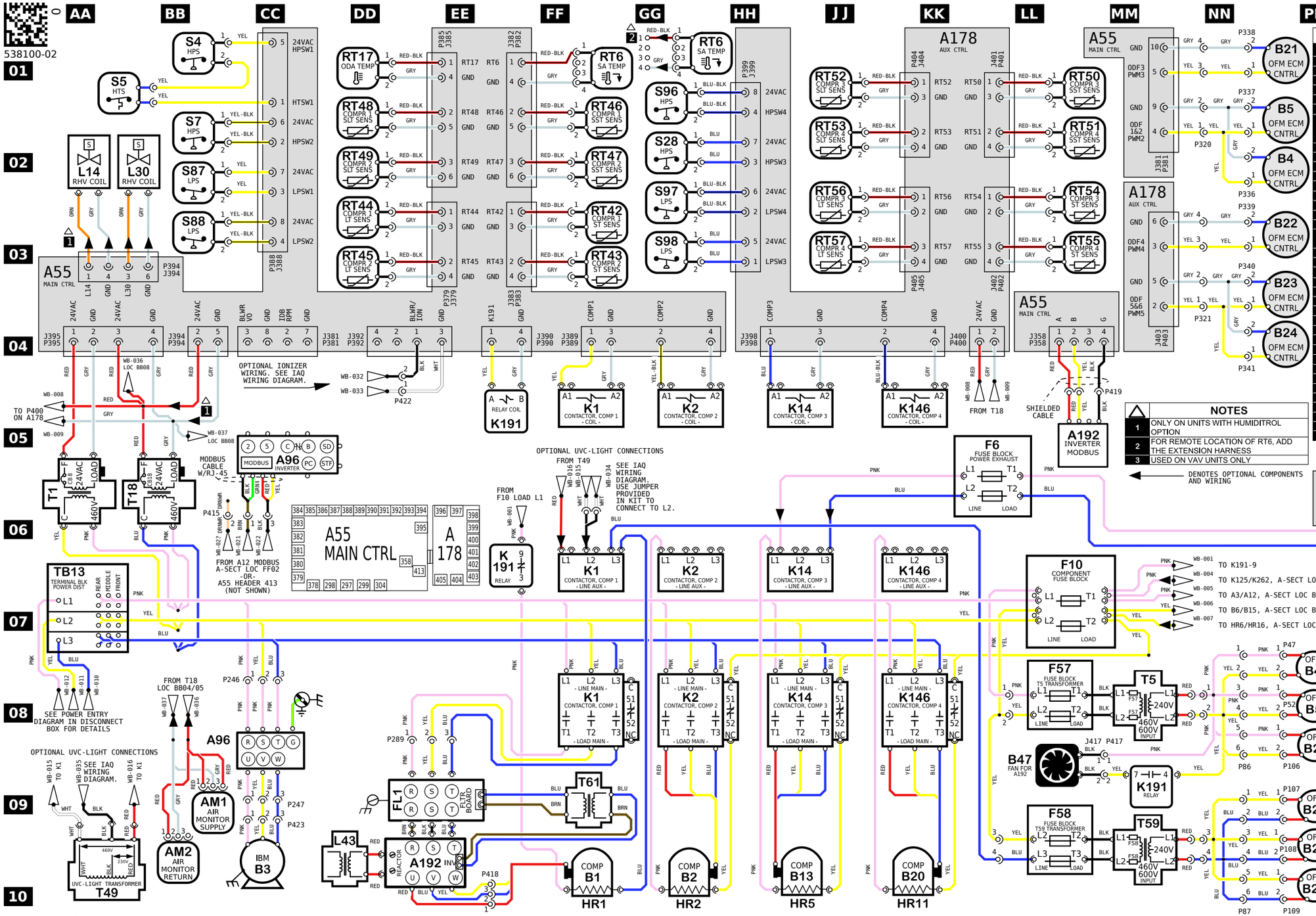

KEY LIST

LOCATION	COMPONENT DESCRIPTION	
SS06	A30	TRANSDUCER, SA DUCT PRESSURE
CC05/08	A96	CONTROL INVERTER, BLOWER
MM05,EE10	A192	INVERTER, COMPRESSOR 1
BB09	AM1, AM2	AIR MONITOR, SUPPLY/RETURN, IAQ-TVOC
FF/GG/JJ/KK10	B1, B2, B13, B20	COMPRESSOR 1, 2, 3, 4
CC10	B3	MOTOR, BLOWER
PP02/08 PP01/08/03/09 PP03/09/04/10	B4, B5, B21, B22, B23, B24	MOTOR, OUTDOOR FAN 1, 2, 3, 4, 5, 6
QQ09	B10, B11	MOTOR, EXHAUST FAN 1, 2
LL09	B47	MOTOR, COOLING FAN FOR A192
QQ09	C6, C8	CAPACITOR, EXHAUST FAN 1, 2
LL05	F6	FUSE, EXHAUST FAN
LL07	F10	FUSE, COMPONENT
LL08	F57	FUSE, T5 TRANSFORMER PRIMARY
LL09	F58	FUSE, T59 TRANSFORMER PRIMARY
EE09	FL1	FILTER BOARD
FF/GG/JJ/KK10	HR1, HR2, HR5, HR11	HEATER, COMPRESSOR 1, 2, 3, 4
FF/GG05,06,08 JJ/KK05,06,08	K1, K2, K14, K146	CONTACTOR, COMPRESSOR 1, 2, 3, 4
QQ07	K65, K231	RELAY, EXHAUST FAN 1, 2
EE05/06,MM09	K191	RELAY, CRANKCASE HEATER 1
EE05	K203	RELAY, INVERTER CONTROL
AA02	L14, L30	VALVE, SOLENOID, REHEAT COIL 1, 2
DD09	L43	REACTOR INVERTER
GG01	RT6	SENSOR, A55 DISCHARGE (IMC)
DD01	RT17	SENSOR, OUTSIDE AIR TEMP
GG03,MM02/03	RT42, RT43, RT54, RT55	SENSOR, SUCTION TEMP., COMP 1, 2, 3, 4
DD03,JJ02/03	RT44, RT45, RT56, RT57	SENSOR, LIQUID TEMP., COMP 1, 2, 3, 4
GG02,MM01/02	RT46, RT47, RT50, RT51	SENSOR, SAT. SUCT TEMP., COMP 1, 2, 3, 4
DD01/02,JJ01/02	RT48, RT49, RT52, RT53	SENSOR, SAT. LIQUID TEMP., COMP 1, 2, 3, 4
BB01/02,GG02/01	S4, S7, S28, S96	LIMIT, HI PRESS. SWITCH, COMP 1, 2, 3, 4
AA01	S5	LIMIT, HI TEMP. SWITCH, COMP 1
BB02/03,GG03/02	S87, S88, S98, S97	SWITCH, LOW PRESS., COMP. 1, 2, 3, 4
AA06	T1	TRANSFORMER, CONTROL
MM08/09	T5, T59	TRANSFORMER, OUTDOOR FAN MOTOR
BB06	T18	TRANSFORMER, CONTACTOR
AA10	T49	TRANSFORMER, UVC-LIGHT POWER
FF09	T61	TRANSFORMER, INV INTERNAL POWER
AA07	TB13	TERMINAL STRIP, POWER DISTRIBUTION

NOTES

1	ONLY ON UNITS WITH HUMIDITROL OPTION
2	FOR REMOTE LOCATION OF RT6, ADD THE EXTENSION HARNESS
3	USED ON VAV UNITS ONLY

DENOTES OPTIONAL COMPONENTS AND WIRING

WARNING

DISCONNECT ALL POWER BEFORE SERVICING.

ELECTRIC SHOCK HAZARD. CAN CAUSE INJURY OR DEATH. UNIT MUST BE GROUNDED IN ACCORDANCE WITH NATIONAL AND LOCAL CODES.

FOR USE WITH COPPER CONDUCTORS ONLY. REFER TO UNIT RATING PLATE FOR MINIMUM CIRCUIT AMPACITY AND MAXIMUM OVERCURRENT PROTECTION SIZE.

IF ANY WIRE IN THIS APPLIANCE IS REPLACED, IT MUST BE REPLACED WITH WIRE OF LIKE SIZE, RATING AND INSULATION THICKNESS.

© 2019

Model: LCM, LGM 210U, 240U, 300U - G-VOLT
COOLING - MSAV NO BYPASS -OR- VAV - 4 COMPRESSORS, 6 CONDENSER FANS

Voltage: 460/3/60 (G)
Supersedes: 538100-01 Form No: 538100-02 Rev: 0

WIRING DIAGRAM FLOW

HEATING	COOLING	COOLING	ACCS	ACCS
SECTION A	SECTION B	SECTION B3	SECTION C	SECTION D

10x17 CUT SIZE

REV	EC NO.	DATE	BY	APVD	REVISION NOTE
---	CN-010356E	08-02-2022	MXR6	JAL21	ORIGINATED AT PD&R CARROLLTON, TX