GAS FURNACES

ML180DFE

MERIT® SERIES

Downflow - Constant Torque Blower Motor - 60 Hz

RESIDENTIAL PRODUCT SPECIFICATIONS

Bulletin No. 210826
July 2024
Supersedes all previous versions

MERIT® SERIES

AFUE - 80%
Input - 44,000 to 110,000 Btuh
Nominal Add-on Cooling - 1.5 to 5 Tons

MODEL NUMBER IDENTIFICATION

ML 1 80 DF 070 E 36 B

Unit Type
ML = Merit® Series

Stages
1 = Single-Stage

AFUE
80 = 80%

Configuration
DF = Downflow

Nominal Gas Heat Input
045 = 44,000 Btuh
070 = 66,000 Btuh
090 = 88,000 Btuh
110 = 110,000 Btuh

Blower
E = High Efficiency Constant Torque Blower Motor

Nominal Add-On Cooling Capacity
36 = 1.5-3 tons
48 = 2.5-4 tons
60 = 3-5 tons

[1] **Cabinet Width**
A = 14-1/2 in.
B = 17-1/2 in.
C = 21 in.

[1] Downflow indoor coils with the same letter designation physically match the furnace **supply air opening**.

FEATURE HIGHLIGHTS

1. Lennox Duralok™ Heat Exchanger Assembly
2. Inshot Burners
3. SureLight® Hot Surface Ignitor
4. Gas Control Valve
5. Combustion Air Inducer
6. Flame Rollout Switches
7. Power Saver™ Constant Torque Blower
8. SureLight® Integrated Furnace Control
9. Insulated Cabinet
10. Safety Interlock Switch
11. Gas Piping And Electrical Inlets

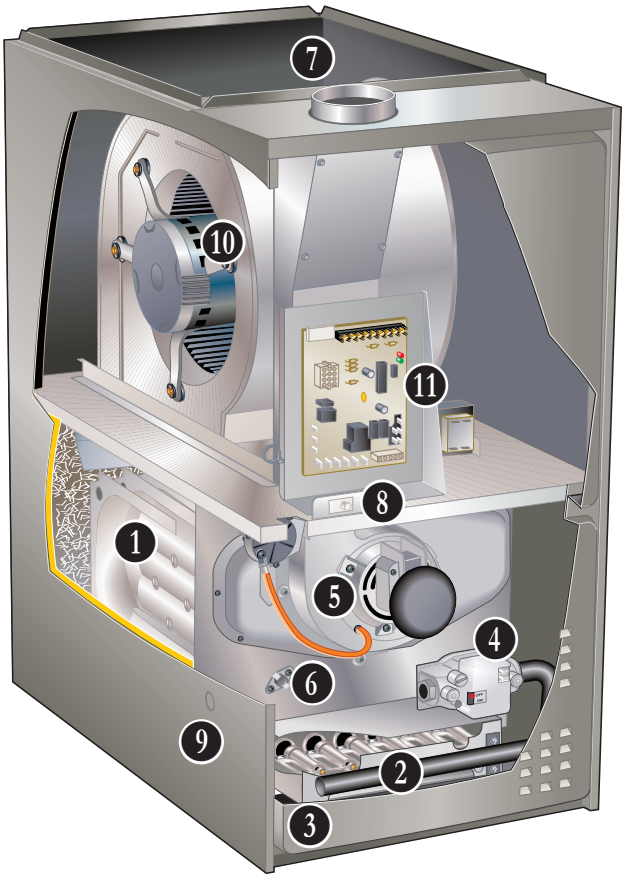

NOTE - ML180E FURNACES ARE NOT AVAILABLE IN CANADA!

CONTENTS

Approvals And Warranty 3
Blower Data 11
Dimensions - Furnace/Coil Combined Dimensions 10
Dimensions - Optional Accessories 9
Dimensions - Unit 8
Features 3
Gas Heat Accessories 7
High Altitude Derate 7
Installation Clearances 9
Optional Accessories - Order Separately 7
Specifications 6

APPROVALS AND WARRANTY

APPROVALS

- AHRI Certified
- Tested and rated according to US DOE test procedures and FTC labeling regulations
- "X" models approved by the California Energy Commission and meets California Nitrogen Oxides Standard (NOx) limits of 40 ng/J
- ISO 9001 Registered Manufacturing Quality System
- Blower data from unit tests conducted in Lennox Laboratory air test chamber

NOTE - This furnace has not been CSA International design certified for installation in mobile homes, recreational vehicles, or outdoors.

California Only

- These furnaces **do not meet** the South Coast Air Quality Management District (SCAQMD) Rule 1111 and San Joaquin Valley Air Pollution Control District (SJVAPCD) Rule 4905 NOx emission limit (14 ng/J) and cannot be installed within the SCAQMD, SJVAPCD and Bay Area

WARRANTY

- Heat Exchanger:
  - Limited twenty years in residential applications
  - Limited ten years in non-residential applications
- All other covered components:
  - Limited five years in residential installations
  - Limited one year in non-residential installations

NOTE - Refer to Lennox® Basic Limited Warranty at www.Lennox.com for additional details.

FEATURES

APPLICATIONS

- Input capacities of 44,000, 66,000, 88,000 and 110,000 Btuh
- Energy efficiency (AFUE) - 80%
- Compact cabinet for downflow applications without any internal modifications to the unit
- Lennox add-on indoor coils, high-efficiency air cleaners and humidifiers can easily be added to furnace
- Shipped factory assembled with all controls installed and wired
- Each unit factory test operated to ensure proper operation

HEATING SYSTEM

1 Lennox Duralok™ Heat Exchanger Assembly
- Heavy gauge aluminized steel heat exchanger
- Crimped seam clamshell type design
- Designed for normal expansion and contraction
- Minimum resistance to air flow
- Laboratory life cycle tested in excess of industry standards
- Compact size permits low overall design of furnace cabinet

2 Inshot Burners
- Aluminized steel inshot burners provide efficient, trouble-free operation
- Burner venturi mixes air and gas in correct proportion for proper combustion
- Burner assembly is removable from the unit as a single component for ease of service

3 SureLight® Hot Surface Ignitor
- Tough, reliable, long-life, trouble-free performance
- Silicon nitride ignitor
- Cemented to steatite block for protection against current leakage
- Ignition leads are constructed of nickel plated copper and are enclosed in high temperature Teflon® insulation for dependable operation

4 Gas Control Valve
- 24 volt redundant combination gas control valve combines manual shut off switch (On-Off), automatic electric valve (dual) and gas pressure regulation into a compact combination control

5 Combustion Air Inducer
- Shaded pole heavy duty blower prepurges heat exchanger and safely vents flue products
- Pressure switch proves blower operation before allowing gas valve to open
- Operates only during heating cycle

6 Flame Rollout Switch
- Factory installed inside burner box
- Switches provides protection from abnormal operating conditions
- Manual reset

Limit Controls
- Primary limit factory installed on vestibule panel
- Secondary limit factory installed on blower housing
- Automatic reset

HEATING SYSTEM (continued)

Optional Accessories

High Altitude Pressure Switch Kit
- Required on most units for proper unit operation at altitudes from 4,501 to 7500 ft.

Natural Gas to LPG/Propane Conversion Kit
- Required for field changeover from natural gas to LPG/Propane

LPG/Propane to Natural Gas Conversion Kit
- Required for field changeover from LPG/Propane to natural gas

CABINET

- Low-profile, narrow width cabinet allows easy installation in downflow applications
- Heavy-gauge, cold rolled steel construction
- Pre-painted cabinet finish
- Flanges provided on supply air opening for ease of plenum connection or alignment with indoor coil
- 7 Insulated with foil faced insulation on sides and back of heating compartment
- Complete service access
- 8 Safety interlock switch automatically shuts off power to unit when blower compartment access panel is removed
- 9 Gas piping and electrical inlets are provided in both sides of cabinet

Low Leakage Cabinet
- All models have less than 2% air leakage
- Meets ANSI/ASHRAE Standard 193-2010 "Method of Test for Determining the Air Tightness of HVAC Equipment"

Coil Match-up
- All Lennox downflow indoor coils will physically match the furnace supply air opening with the same letter designation (A, B, C, D) as in the furnace model number

Optional Accessories

Downflow Combustible Flooring Base
- Required for heating only units installed on combustible floors
- Not required in add-on cooling applications
- See Dimension Drawing

FILTER

- Filter and provisions for external mounting must be field provided

Optional Accessories

Downflow Filter Cabinet
- Filter cabinet mounts directly on top of furnace
- "A" width cabinet includes one filter
- "B and "C" width cabinets have two filters
- Filter rails are furnished
- Front access for servicing
- Cleanable filter(s) are furnished

BLOWER

10 Power Saver™ Constant Torque Blower Motor
- Programmable high efficiency multi-speed blower motor. By maintaining constant torque output, blower motor can deliver more uniform (but not constant) airflow over the static pressure range
- Programmable multi-speed operation is achieved by the use of an ECM (Electronically Commutated Motor) motor
- Leadless blower motor features simple plug-in connections
- Controlled by the Integrated Furnace Control
- Blower speeds are easily changed on the integrated furnace control. See Blower Data tables

Blower Assembly
- Lennox designed and built, direct drive blower
- Each blower is statically and dynamically balanced as an assembly before installation in the unit
- Blower motor is resiliently mounted to blower assembly
- Blower is easily removed for servicing

CONTROLS

11 SureLight® Integrated Furnace Control
- Contains all necessary controls and relays to operate furnace
- Combustion air inducer is operated by the integrated furnace control
- Prior to ignition, a pre-purge cycle for 15 seconds is initiated
- After the main burners are turned off, a post-purge cycle for 5 seconds is run
- Flame sensor assures safe and reliable operation
- Should loss of flame occur the integrated furnace control will initiate 4 re-attempts at ignition before locking out unit operation for 60 minutes
- Watchguard type circuit automatically resets ignition controls after one hour of continuous thermostat demand after unit lockout, eliminating nuisance calls for service
- Fan control consists of adjustable blower timed-off delay (60, 90, 120, 180 seconds - factory setting 90 seconds) and fixed blower timed-on delay (30 seconds - heating, 2 seconds - cooling)
- For air-conditioning applications, blower is automatically energized on thermostat demand for cooling
- Control has low speed continuous blower speed setting for humidifier or air cleaner operation
- Two accessory terminals furnished for additional power supply requirements for 120 volt (less than 1 amp) power humidifiers and powered air cleaners
- One additional terminal is furnished for power supply requirements for 24V (less than 0.5 amp) low voltage accessories
- Ignition control has single red LED to indicate status and as an aid in troubleshooting
- The last 10 codes are stored in non-volatile memory (accessible by recall button on control) for servicing

CONTROLS (continued)

24 Volt Transformer (40VA)
- Furnished and factory installed on outside of control box
- Circuit breaker (furnished) is wired in series

Field Wiring Make-up Box
- Furnished for line voltage wiring
- Factory installed internally on left side of furnace
- Box may be installed internally on right side of furnace

Optional Accessories

M30 Smart Wi-Fi Thermostat
- Wi-Fi-enabled, electronic 7-day, universal, multi-stage, programmable, touchscreen thermostat
- 4 Heat/2 Cool
- Auto-changeover
- Dual-fuel control with optional outdoor sensor
- Controls dehumidification during cooling mode and humidification during heating mode

- Offers enhanced capabilities including humidification / dehumidification / dewpoint measurement and control, Humiditrol® control, and equipment maintenance reminders
- Easy to read 4.3 in. color touchscreen (measured diagonally)
- LCD display with backlight shows the current and set temperature, time, inside relative humidity, system status (operating mode and schedules) and outside temperature (optional outdoor sensor required)
- Smooth Setback Recovery starts system early to achieve setpoint at start of program period
- Compressor short-cycle protection (5 minutes)
- Up to four separate schedules are available plus Schedule IQ™
- One-Touch Away Mode - A quick and easy way to set the cooling and heating setpoints while away
- Smart Away™ - Uses geo-fencing technology to determine when the homeowner is within a predetermined distance from the home to operate the system when leaving, away and arriving
- Wi-Fi remote monitoring and adjustment through a home wireless network for desktop PCs, laptops and apps for smartphones or tablets
- Smart home automation compatible with Amazon Alexa®, Google Assistant and IFTTT
- Service Dashboard features online real-time monitoring of installed Lennox® thermostats

NOTE - See the M30 Smart Wi-Fi Thermostat Product Specifications bulletin in the Controls section for more information.

Remote Outdoor Temperature Sensor
- Used with the M30 Smart Thermostat
- Outdoor sensor allows thermostat to display outdoor temperature

NOTE - Sensor is required for the Enhanced Dehumidification Accessory (EDA).

Thermostat
- Thermostat is not furnished with unit
- Lennox Price Book for selection

Blower Relay Kit (For Use With Two-Stage Outdoor Units)
- Allows furnace blower speed changes when matched with two-stage air conditioners or heat pumps

Furnace Twinning Panel
- Required to operate two identical furnaces simultaneously from a single thermostat
- For single stage conventional (1 heat/1 cool), multi-stage conventional (2 heat/2 cool) and heat pump (3 heat/2 cool) equipment
- Can be used with common or separate ducted systems
- Contains PC Control Board with terminal strip connections for thermostat and HVAC equipment
- LEDs indicate system operating status
- Uses standard 18-gauge thermostat wire
- Power Supply: 24 VAC, 40VA (transformer not furnished)
- Mounting base with hardware furnished
- Dimensions (H x W x D): 10 x 5 x 2 in.

NOTE - Only identical furnaces should be twinned in order to ensure that both furnace blowers start at the same time. If furnaces are not identical, back draft dampers can be installed in either the supply or return duct.

Up to four identical furnaces can be twinned. Requires two panels that are wired together.

Furnace Twinning Kit
- Required to operate two furnaces simultaneously
- Kit consists of twinning relays, quick connect terminals and mounting hardware
- Used for single-stage heating/single-stage cooling with a single-stage thermostat

Transformer (75VA)
- Recommended when furnace is used with zoning or defrost thermostats and other 24V accessories requiring a higher VA rating
- Circuit breaker (furnished) is wired in series
- Replaces the standard 40VA transformer

REFRIGERATION DETECTION SYSTEM (RDS)

Optional Accessories

Refrigerant Detection System (RDS) Coil Sensor Kit

- Complies with UL 60335-2-40 approved standard
- Required for field installation for all systems using R-454B refrigerant if sensor is not furnished with coil
- Consists of Refrigerant Detection System (RDS) sensor, lineset sleeves, mounting brackets and A2L labeling
- Sensor ensures safe operation for systems equipped with R-454B refrigerant
- Sensor will detect anu R-454B refrigerant

Refrigerant Detection System (RDS) Blower Control Board

Communicating Blower Control Board (Universal)

- Communicating Blower Control Board and Sensor can be used universally with any Lennox® communicating furnace or any non-communicating 24 volt furnace

Non-Communicating Blower Control Board

- Non-Communicating Blower Control Board and Sensor can be used with any non-communicating 24 volt furnace

Standard Features

- Complies with UL 60335-2-40 approved standard
- Required for all systems using R-454B refrigerant
- Connects to the RDS sensor furnished with the RDS Coil Sensor Kit
- Supports up to two RDS Sensors (factory setting)
- Used as an interface between indoor unit and thermostat to control system
- Ensures safe operation for systems equipped with R-454B refrigerant
- If R-454B refrigerant is detected, the refrigerant detection system will stop compressor and/or heating operating and operate the blower to reduce concentrations in the conditioned space
- Once safe levels are reached the HVAC system will resume normal operation
- Multi-color LED for system status and as an aid in troubleshooting
  - Flashing LED codes for system status (Green/Blue) and diagnosing Sensor errors (Red)
- Alarm relay can trigger an external alarm if R-454B refrigerant is detected
- Zone relay opens all zone dampers (if part of a zoning system) if R-454B refrigerant is detected
- Power is disabled to non-communicating thermostats to prevent demand if R-454B refrigerant is detected
- On system start-up blower will run for five minutes and any thermostat demands are disabled
- Dimensions (H x W x D): 7-7/16 x 7-7/16 x 2-1/2 (189 x 189 x 127 mm)

NOTE - See Refrigerant Detection System (RDS) Components Table on page 8.

See the CK40 Indoor Coil Product Specifications bulletins for more information.

Refer to the Installation Instructions for additional information.

SPECIFICATIONS

Gas Heating Performance	**Model No.**	**ML180DF045E36A**	**ML180DF070E36A**	**ML180DF070E36B**
	[1] AFUE	80%	80%	80%
	Input - Btuh	44,000	66,000	66,000
	Output - Btuh	36,000	53,000	54,000
	Temperature rise range - °F	15 - 45	30 - 60	30 - 60
	Gas Manifold Pressure (in. w.g.) Nat. Gas / LPG/Propane	3.5 / 10.0	3.5 / 10.0	3.5 / 10.0
High Static - in. w.g.		0.50	0.50	0.50
Connections in.	Flue connection - in. round	4	4	4
	Gas pipe size IPS	1/2	1/2	1/2
Indoor Blower	Wheel nom. dia. x width - in.	10 x 8	10 x 10	10 x 10
	Motor Type	DC Brushless	DC Brushless	DC Brushless
	Motor output - hp	1/2	1/2	1/2
	Tons of add-on cooling	1.5 - 3	1.5 - 3	1.5 - 3
	Air Volume Range - cfm	355 - 1430	675 - 1460	430 - 1475
Electrical Data	Voltage	120 volts - 60 hertz - 1 phase		
	Blower motor full load amps	6.8	6.8	6.8
	Maximum overcurrent protection	15	15	15
Shipping Data	lbs. - 1 package	113	119	128

NOTE - Filters and provisions for mounting are not furnished and must be field provided.

[1] Annual Fuel Utilization Efficiency based on DOE test procedures and according to FTC labeling regulations. Isolated combustion system rating for non-weatherized furnaces.

SPECIFICATIONS

Gas Heating Performance	**Model No.**	**ML180DF090E48B**	**ML180DF110E60C**
	[1] AFUE	80%	80%
	Input - Btuh	88,000	110,000
	Output - Btuh	72,000	90,000
	Temperature rise range - °F	30 - 60	30 - 60
	Gas Manifold Pressure (in. w.g.) Nat. Gas / LPG/Propane	3.5 / 10.0	3.5 / 10.0
High Static - in. w.g.		0.50	0.50
Connections in.	Flue connection - in. round	4	4
	Gas pipe size IPS	1/2	1/2
Indoor Blower	Wheel nom. dia. x width - in.	10 x 10	11-1/2 x 10
	Motor Type	DC Brushless	DC Brushless
	Motor output - hp	3/4	1
	Tons of add-on cooling	2.5 - 4	3 - 5
	Air Volume Range - cfm	680 - 1750	990 - 2410
Electrical Data	Voltage	120 volts - 60 hertz - 1 phase	
	Blower motor full load amps	8.4	10.9
	Maximum overcurrent protection	15	15
Shipping Data	lbs. - 1 package	140	160

NOTE - Filters and provisions for mounting are not furnished and must be field provided.

[1] Annual Fuel Utilization Efficiency based on DOE test procedures and according to FTC labeling regulations. Isolated combustion system rating for non-weatherized furnaces.

OPTIONAL ACCESSORIES - ORDER SEPARATELY

	"A" Width Models	"B" Width Models	"C" Width Models
CABINET ACCESSORIES			
Downflow Combustible Flooring Base	**11M59**	**11M60**	**11M61**
CONTROLS			
M30 Smart Wi-Fi Thermostat	**15Z69**	**15Z69**	**15Z69**
Remote Outdoor Air Temperature Sensor	**X2658**	**X2658**	**X2658**
Blower Relay Kit (for two-stage outdoor units)	**85W66**	**85W66**	**85W66**
Furnace Twinning Panel	**Y3653**	**Y3653**	**Y3653**
Furnace Twinning Kit	**16W72**	**16W72**	**16W72**
Transformer (75VA)	**27J32**	**27J32**	**27J32**
FILTERS			
[1] **Downflow Filter Cabinet**	**51W06**	**51W07**	**51W08**
No. and Size of filter - in.	(1) 20 x 20 x 1	(2) 20 x 16 x 1	(2) 20 x 16 x 1

[1] Cleanable polyurethane, frame-type filter.

GAS HEAT ACCESSORIES

Input	High Altitude Pressure Switch Kit			Natural Gas to LPG/Propane Kit		LPG/Propane to Natural Gas Kit	Natural Gas High Altitude Orifice Kit
	0 - 4500 ft.	4501 - 7500 ft.	7501 - 10,000 ft.	0 - 7500 ft.	7501 - 10,000 ft.	0 - 7500 ft.	7501 - 10,000 ft.
045	**No Change**	**No Change**	**80W51**	**11K49**	**11K44**	**73W81**	**73W37**
070	**No Change**	**80W52**	**80W51**	**11K49**	**11K44**	**73W81**	**73W37**
090	**No Change**	**No Change**	**80W51**	**11K49**	**11K44**	**73W81**	**73W37**
110	**No Change**	**80W52**	**80W51**	**11K49**	**11K44**	**73W81**	**73W37**

REFRIGERANT DETECTION SYSTEM (RDS) COMPONENTS

Description		Order No.
Refrigerant Detection System (RDS) Coil Sensor Kit		**26Z69**
Refrigerant Detection System (RDS) Blower Control Board	Any Lennox® Communicating Furnace or any Non-Communicating 24V Furnace (Universal)	**27A03**
	Any Non-Communicating 24V Furnace	**27A02**

NOTE - Communicating Blower Control Board and Sensor can be used universally with Lennox® communicating furnace or any non-communicating 24 volt furnace.
Non-Communicating Blower Control Board and Sensor can be used with any non-communicating 24 volt furnace.

HIGH ALTITUDE DERATE

NOTE - Units may be installed at altitudes up to 4500 ft. above sea level without any modifications.
At altitudes above 4500 ft. units must be derated to match information in the shaded areas shown below.

NOTE - This is the only permissible derate for these units.

Input	Gas Manifold Pressure (Outlet) in. w.g.						Line Pressure - in. w.g.		
	0 - 4500 Feet		4501 - 7500 Feet		7501 - 10,000 ft.		Minimum		Maximum
	Natural Gas	LPG/ Propane	Natural Gas	LPG/ Propane	[1] Natural Gas	LPG/ Propane	Natural Gas	LPG/ Propane	
045	3.5	10	3.5	10	3.5	10	4.5	11	13
070	3.5	10	3.3	10	3.5	10	4.5	11	13
090	3.5	10	3.3	10	3.5	10	4.5	11	13
110	3.5	10	3.3	10	3.5	10	4.5	11	13

[1] Natural Gas High Altitude Orifice Kit required.

DIMENSIONS - UNIT

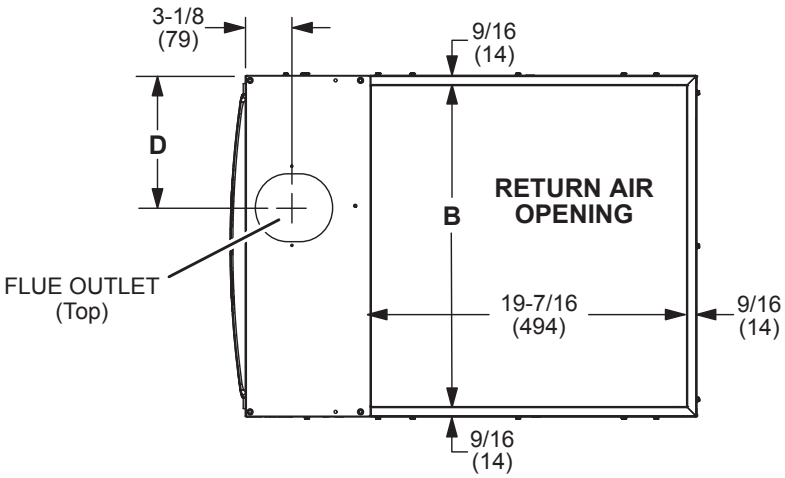

TOP VIEW

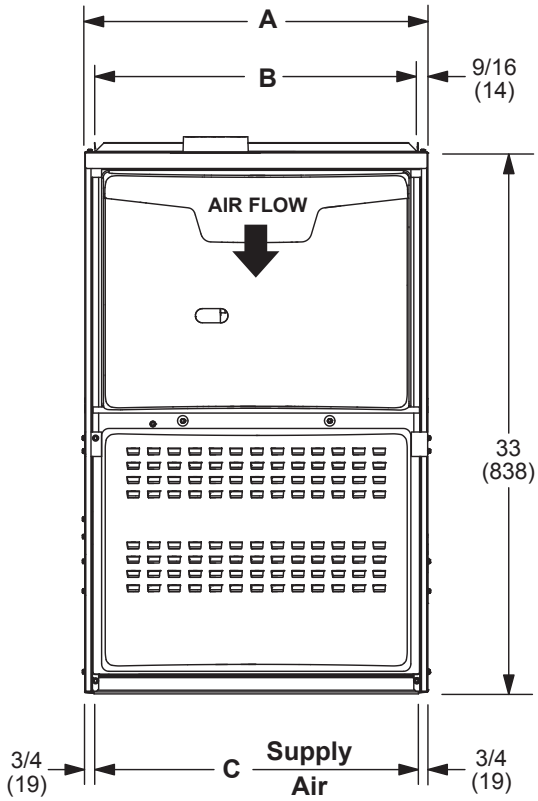

FRONT VIEW

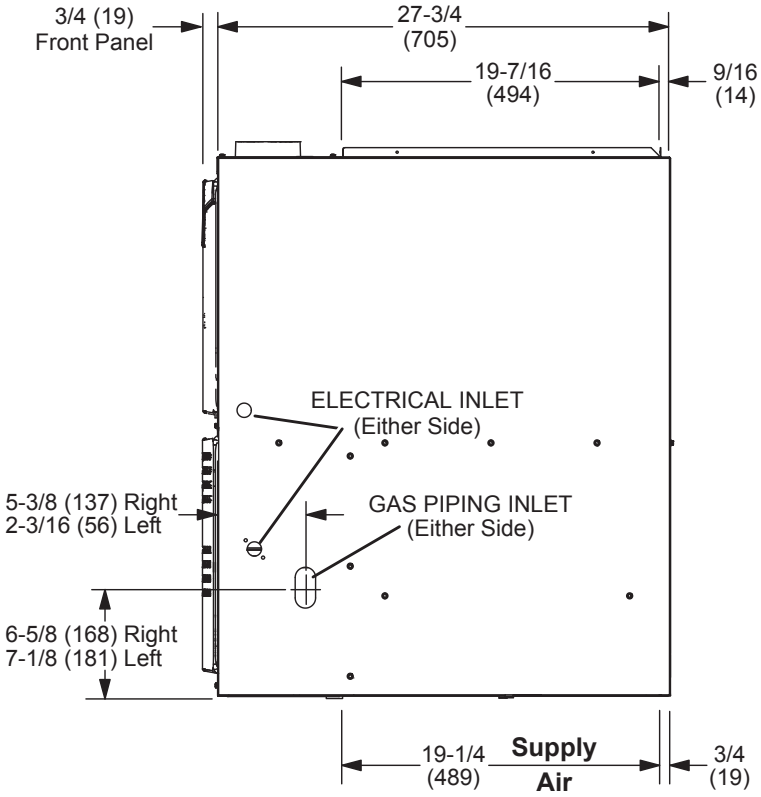

SIDE VIEW

Model No.	A		B		C		D	
	in.	mm	in.	mm	in.	mm	in.	mm
ML180DF045E36A ML180UH070E36A	14-1/2	368	13-3/8	340	13	330	4-3/4	121
ML180DF070E36B ML180DF090E48B	17-1/2	446	16-3/8	416	16	406	6-1/4	159
ML180DF110E60C	21	533	19-7/8	505	19-1/2	495	8	203

DIMENSIONS - OPTIONAL ACCESSORIES

DOWNFLOW FILTER CABINET

"A" WIDTH FURNACES (Single Filter)

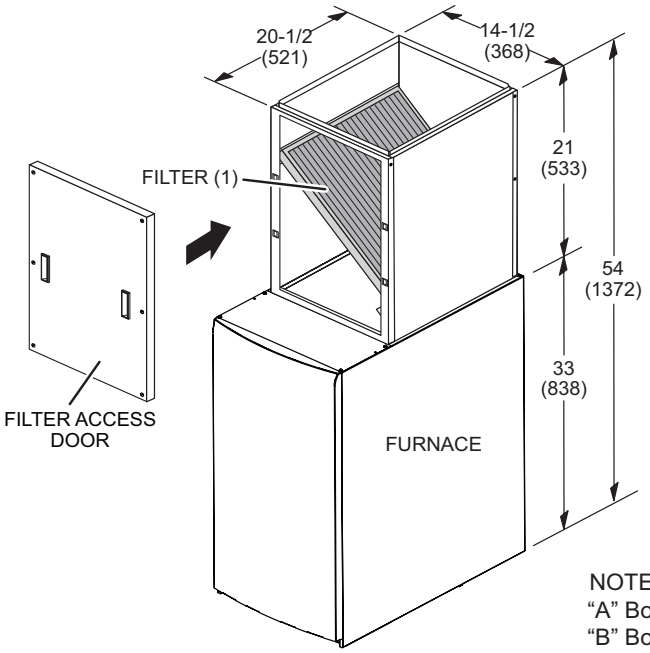

"B AND "C" WIDTH FURNACES (Two Filters)

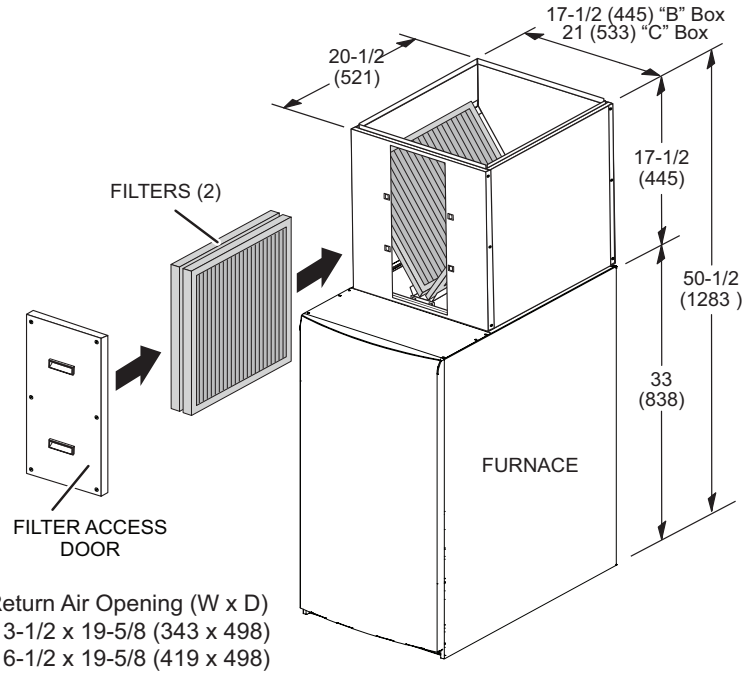

NOTE: Return Air Opening (W x D)
"A" Box 13-1/2 x 19-5/8 (343 x 498)
"B" Box 16-1/2 x 19-5/8 (419 x 498)
"C" Box 20 x 19-5/8 (508 x 498)

INSTALLATION CLEARANCES

Vent Type	Type B1	Type C
Sides	0 in. (0 mm)	[1] 0 (0)
Rear	0 in. (0 mm)	0 (0)
Top	1 in. (25 mm)	1 (25)
Front	2-1/4 in. (57 mm)	2-1/4 (57)
Front (service/alcove)	24 in. (610 mm)	24 (610)
Floor	[2] Combustible	[2] Combustible
Flue	1 in. (25 mm)	6 (152)

NOTE − Air for combustion must conform to the methods outlined in the National Fuel Gas Code (NFPA 54/ANSI-Z223.1).

NOTE − In the U.S. flue sizing must conform to the methods outlined in the current National Fuel Gas Code (NFPA 54/ANSI-Z223.1) or applicable provisions of local building codes.

[1] Left side requires 4 in. if single wall vent is used on 14-1/2 in. "A" width cabinets, 2 in. on 17-1/2 in. "B" width cabinets.

[2] Clearance for installation on combustible floor if Optional Downflow Combustible Flooring Base is installed between furnace and combustible floor. Not required in add-on cooling applications if installed in accordance with local codes, National Fuel Gas Code ANSI-Z223.1 or National Standard of Canada CAN/CSA-B149.1 and CAN/CSA-B149.2 Installation Code for Gas Burning Appliances". Do not install the furnace directly on carpeting, tile, or other combustible materials other than wood flooring.

DIMENSIONS - OPTIONAL ACCESSORIES

DOWNFLOW COMBUSTIBLE FLOORING BASE

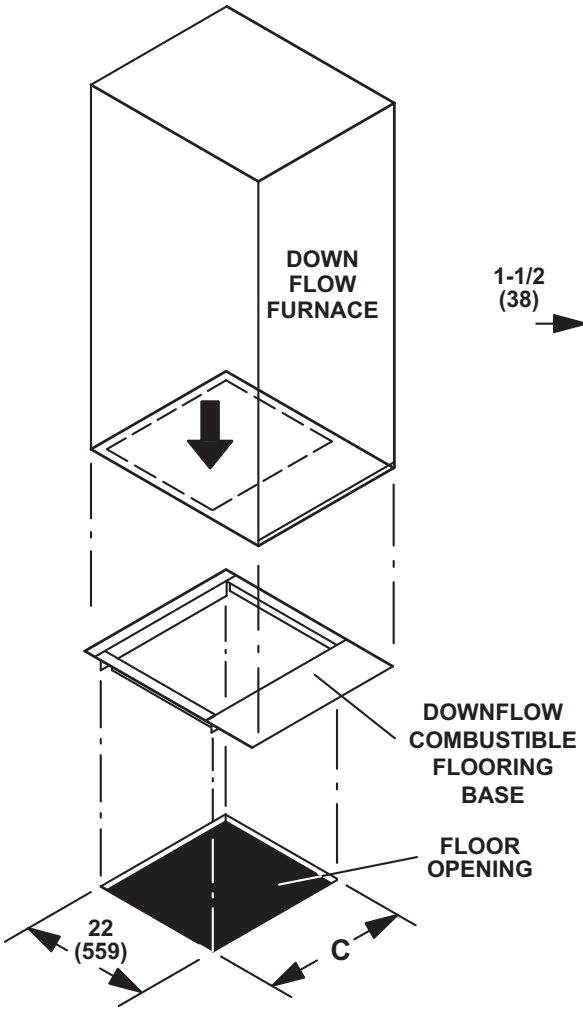

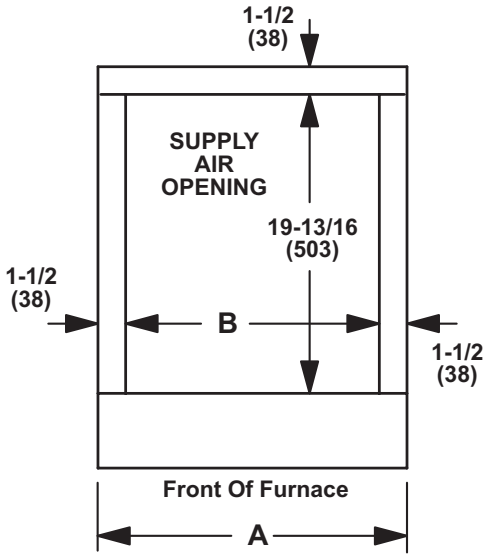

TOP VIEW

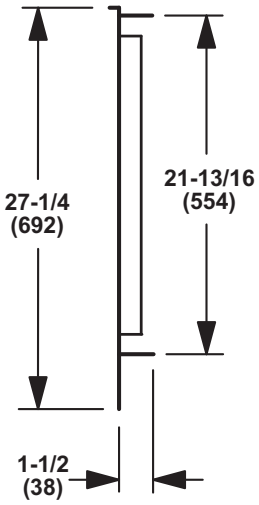

SIDE VIEW

Cabinet Width	Catalog Number	A		B		C	
		in.	mm	in.	mm	in.	mm
A	**11M59**	16-9/16	421	13-9/16	344	15-3/4	400
B	**11M60**	19-9/16	497	16-9/16	421	18-3/4	476
C	**11M61**	23-1/16	586	20-1/16	510	22-1/4	565

DIMENSIONS - FURNACE/COIL COMBINED DIMENSIONS

Model		Coil/Furnace Width		Coil Height		Overall Height	
CK40DT	**CRX35**	in.	mm	in.	mm	in.	mm
CK40DT-24A	CRX35-24A	14-1/2	368	18	457	51	1295
CK40DT-24B	CRX35-24B	17-1/2	445	18	457	51	1295
CK40DT-30/36B	CRX35-30/36B	17-1/2	445	23-1/2	597	56-1/2	1435
CK40DT-30/36C	CRX35-30/36C	21	533	23-1/2	597	56-1/2	1435
CK40DT-42B	CRX35-42B	17-1/2	445	23-1/2	597	56-1/2	1435
CK40DT-48C	CRX35-48C	21	533	27-1/2	699	60-1/2	1537
CK40CT-50/60C	CRX35-50/60C	21	533	27-1/2	699	60-1/2	1537

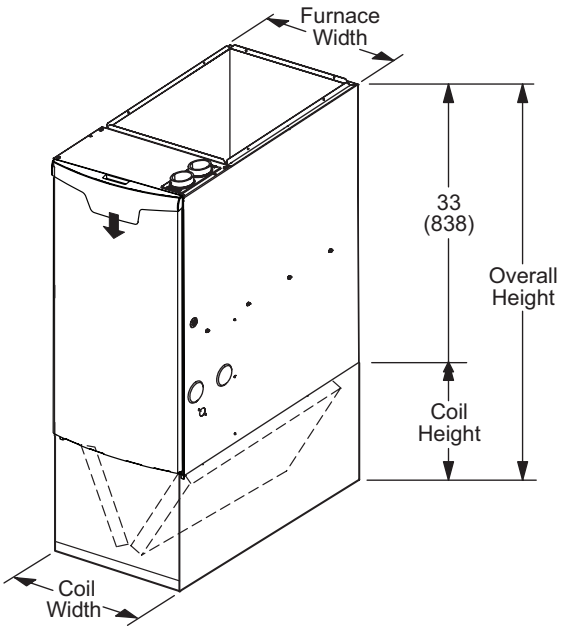

BLOWER DATA

ML180DF045E36A PERFORMANCE (Less Filter)

External Static Pressure in. w.g.	Air Volume / Watts at Various Blower Speeds									
	High (Black)		Medium-High (Brown)		Medium (Blue)		Medium-Low (Yellow)		Low (Red)	
	cfm	Watts	cfm	Watts	cfm	Watts	cfm	Watts	cfm	Watts
0.00	1384	268	1164	170	970	111	942	86	867	75
0.10	1347	278	1137	179	947	120	880	94	787	76
0.20	1310	288	1110	188	924	129	818	102	707	77
0.30	1278	301	1066	198	878	135	771	109	645	84
0.40	1259	312	1027	204	831	143	713	115	587	89
0.50	1210	323	995	214	785	149	669	121	530	95
0.60	1183	330	941	220	742	156	615	127	478	100
0.70	1155	338	902	228	702	164	570	134	430	105
0.80	1085	333	873	236	654	170	522	139	384	110
0.90	992	313	831	244	615	176	478	145	-	-
1.00	879	286	796	250	574	182	437	150	-	-

ML180DF070E36A PERFORMANCE (Less Filter)

External Static Pressure in. w.g.	Air Volume / Watts at Various Blower Speeds									
	High (Black)		Medium-High (Brown)		Medium (Blue)		Medium-Low (Yellow)		Low (Red)	
	cfm	Watts	cfm	Watts	cfm	Watts	cfm	Watts	cfm	Watts
0.00	1485	305	1297	210	1203	167	1176	159	1033	111
0.10	1444	316	1262	219	1162	176	1144	169	986	119
0.20	1403	327	1227	228	1121	185	1112	179	939	127
0.30	1373	337	1186	236	1078	194	1064	187	894	132
0.40	1350	348	1151	244	1045	202	1034	196	861	143
0.50	1321	361	1117	255	1012	212	992	205	816	150
0.60	1279	371	1082	263	969	219	948	212	773	157
0.70	1250	382	1049	272	937	230	914	222	730	165
0.80	1214	384	1018	283	898	238	872	229	682	172
0.90	1131	370	966	291	862	247	840	238	639	179
1.00	1029	343	930	300	825	255	798	247	595	186

ML180DF070E36B PERFORMANCE (Less Filter)

External Static Pressure in. w.g.	Air Volume / Watts at Various Blower Speeds									
	High (Black)		Medium-High (Brown)		Medium (Blue)		Medium-Low (Yellow)		Low (Red)	
	cfm	Watts	cfm	Watts	cfm	Watts	cfm	Watts	cfm	Watts
0.00	1572	290	1340	182	1248	149	1215	138	1078	84
0.10	1526	302	1291	192	1202	158	1166	146	1003	97
0.20	1480	314	1241	202	1156	166	1117	154	928	109
0.30	1434	327	1194	212	1089	178	1059	164	860	116
0.40	1388	338	1163	219	1040	187	1003	174	804	125
0.50	1353	350	1095	231	986	195	951	183	736	133
0.60	1309	360	1046	244	928	205	900	189	642	137
0.70	1237	355	1000	251	878	213	842	202	567	149
0.80	1123	330	947	262	816	223	750	209	488	154
0.90	969	298	888	268	723	231	673	219	444	161
1.00	753	264	700	251	635	236	609	226	-	-

BLOWER DATA

ML180DF090E48B PERFORMANCE (Less Filter)

External Static Pressure in. w.g.	Air Volume / Watts at Various Blower Speeds									
	High (Black)		Medium-High (Brown)		Medium (Blue)		Medium-Low (Yellow)		Low (Red)	
	cfm	Watts	cfm	Watts	cfm	Watts	cfm	Watts	cfm	Watts
0.00	1754	319	1547	227	1408	180	1375	164	1234	120
0.10	1711	333	1499	237	1372	192	1328	175	1183	131
0.20	1668	347	1451	247	1336	204	1281	186	1132	142
0.30	1643	362	1421	262	1307	214	1240	196	1077	148
0.40	1601	371	1389	273	1261	227	1198	206	1036	160
0.50	1559	390	1352	287	1215	235	1152	219	984	170
0.60	1527	401	1312	297	1181	249	1113	228	934	181
0.70	1486	414	1265	309	1139	262	1062	239	887	191
0.80	1456	428	1236	321	1096	273	1024	251	843	201
0.90	1407	432	1195	335	1055	284	982	264	778	212
1.00	1277	403	1152	348	1005	294	940	273	716	222

ML180DF110E60C PERFORMANCE (Less Filter)

External Static Pressure in. w.g.	Air Volume / Watts at Various Blower Speeds									
	High (Black)		Medium-High (Brown)		Medium (Blue)		Medium-Low (Yellow)		Low (Red)	
	cfm	Watts	cfm	Watts	cfm	Watts	cfm	Watts	cfm	Watts
0.00	2394	560	2091	384	1829	270	1725	215	1542	162
0.10	2335	581	2049	400	1798	283	1664	228	1476	169
0.20	2276	602	2007	416	1767	296	1603	241	1410	176
0.30	2243	613	1971	428	1709	308	1563	253	1347	188
0.40	2183	632	1917	441	1654	322	1500	263	1280	198
0.50	2164	645	1864	458	1598	331	1439	275	1222	207
0.60	2120	670	1818	474	1561	347	1391	286	1153	217
0.70	2083	682	1777	485	1496	355	1333	296	1100	228
0.80	2032	693	1728	499	1450	369	1272	305	1022	239
0.90	2008	712	1690	513	1395	380	1211	320	928	250
1.00	1962	730	1634	520	1345	393	1150	330	863	260

REVISIONS

Sections	Description of Change
Dimensions	Updated Furnace/Coil Combined Dimension data for new CK40 coils.
Override Accessories	Added Refrigerant Detection System (RDS) Components.

Visit us at www.lennox.com
For the latest technical information, www.LennoxPros.com
Contact us at 1-800-4-LENNOX

NOTE - Due to Lennox' ongoing commitment to quality, Specifications, Ratings and Dimensions subject to change without notice and without incurring liability.
Improper installation, adjustment, alteration, service or maintenance can cause property damage or personal injury.
Installation and service must be performed by a qualified installer and servicing agency.

©2024 Lennox Industries, Inc.