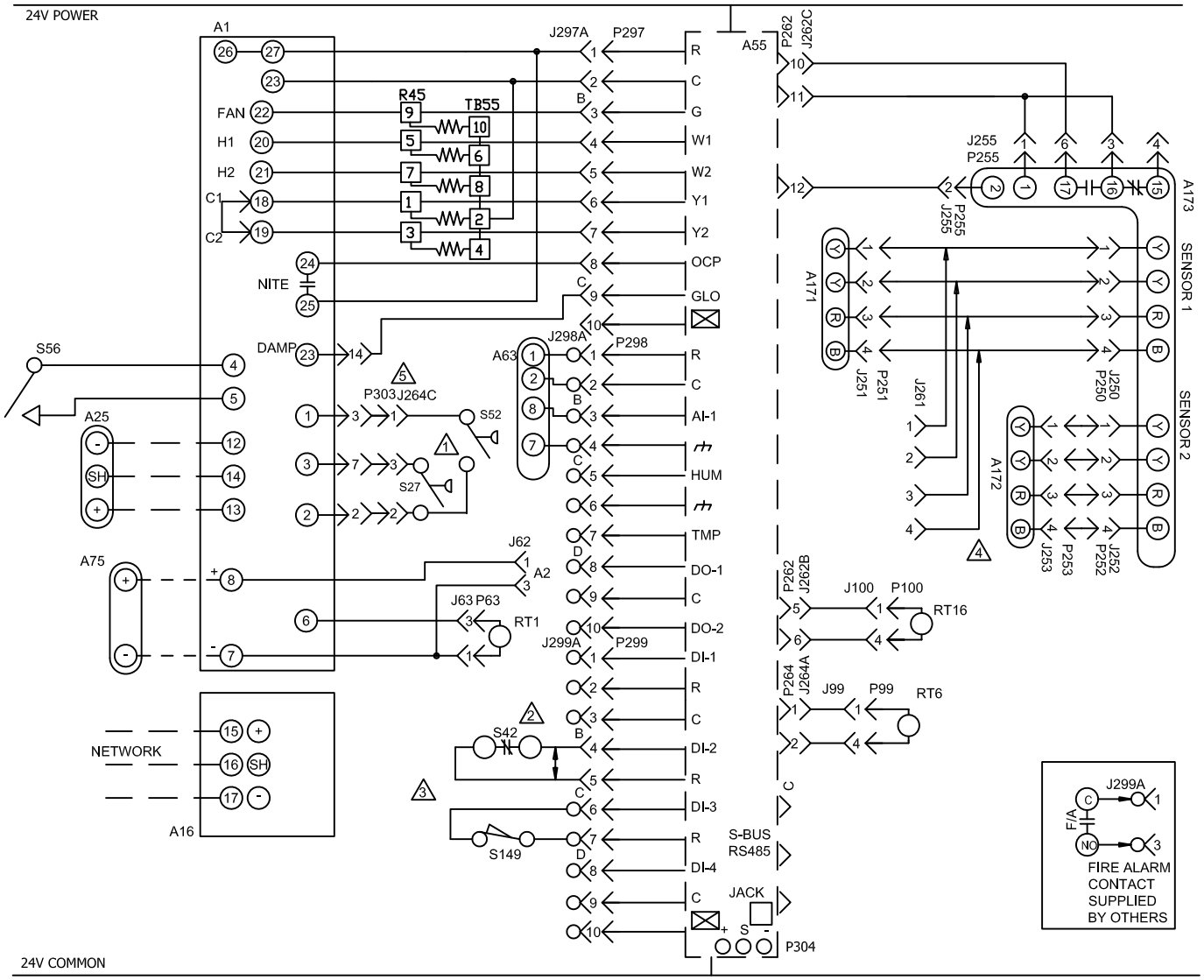

KEY	COMPONENT
A1	PANEL LOGIC
A2	SENSOR, RETURN AIR - DUCT
A16	CONTROL MICROPROCESSOR
A25	SENSOR, ZONE CONTROL
A55	PANEL, MAIN
A63	SENSOR, CO2 (IAQ) OPTIONAL
A75	SENSOR, ROOM
A171	SENSOR ONE, SMOKE, RETURN AIR
A172	SENSOR TWO, SMOKE, SUPPLY AIR
A173	MODULE, CONTROL SMOKE DETECTION
R45	STRIP, RESISTOR 1K OHM, 5WATT, TRIAC
RT1	SENSOR, DISCHARGE AIR
RT6	SENSOR, A55 DISCHARGE AIR (IMC))
RT16	SENSOR, RETURN AIR TEMP
S27	SWITCH, FILTER
S42	SWITCH, OVERLOAD RELAY BLOWER MOTOR LO
S52	SWITCH, AIRFLOW
S56	SWITCH, MOMENTARY OVERRIDE
S149	SWITCH, OVERFLOW
TB55	TERMINAL STRIP FOR 1K RESISTOR

J/P	JACK/PLUG DESCRIPTION
62	RETURN SENSOR A2
63	DISCHARGE AIR SENSOR RT1
79	NOVAR HEADER
80	NOVAR PIGTAIL
99	RT6 RETURN AIR SENSOR
100	RT16 SUPPLY AIR SENSOR
250	SMOKE DETECTOR ONE
251	SMOKE DETECTOR ONE
252	SMOKE DETECTOR TWO
253	SMOKE DETECTOR TWO
255	MODULE, CONTROL SMOKE DETECTION
261	SUPPLY SMOKE DETECTOR JUMPER
262	ECONOMIZER
264	BLOWER DECK
297	THERMOSTAT - DDC INTERFACE
298	IAQ INTERFACE
299	SAFETY INTERFACE
303	BLOWER PROVING SWITCH
304	SYS BUS

1. S27 AND S52 USED WITH ETM 2024, M2 SETTINGS NEED TO BE MODIFIED WHEN TRANSFERRING TO ETM2024
2. S42 HOOKUP FOR UNITS LESS INVERTER, SEE INVERTER WITH BYPASSING FOR S42 OR INVERTER ALARM INPUT HOOKUP
3. M2 SETTINGS NEED TO BE MODIFIED WHEN S42 OR S149 ARE INSTALLED
4. CONNECT A172 SENSOR TO J261 ON SUPPLY AIR SMOKE DETECTOR ONLY
5. WHEN FIELD INSTALLING NOVAR 2024, UNPLUG J264C FROM M2 AND CONNECT TO P303 AS SHOWN

DENOTES OPTIONAL COMPONENTS

CLASS II FIELD WIRING

2019/10	STRATEGOS WIRING DIAGRAM 538070-01	10/19
ACCESSORIES		
CONTROL FOR SG/SC UNITS NOVAR ETM 3051		
SECTION C		REV 0
Supersedes	New Form No. 538070-01	

© 2011 Lennox Commercial