PACKAGED HEAT PUMP

LRP15HPK

ELITE® SERIES

Two-Stage Compressor | Variable-Speed Blower | Single-Phase | R-454B | 60Hz

RESIDENTIAL
PRODUCT SPECIFICATIONS (EHB)

SEER2 - Up to 16.0
HSPF2 - 7.2
2 to 5 Tons
Cooling Capacity - 23,000 to 57,000 Btuh
Heating Capacity - 21,400 to 58,000 Btuh
Optional Electric Heat - 5 to 20 kW

ELITE® SERIES

ENERGY STAR

MODEL NUMBER IDENTIFICATION

L RP 15 HP K 36 V P -1 -A

- **Brand** — L = Lennox
- **Product Type** — RP = Residential Packaged Unit
- **Nominal SEER2**
- **Unit Type** — HP = Packaged Heat Pump
- **Refrigerant Type** — K = R-454B
- **Nominal Cooling Capacity** — 24 = 2 tons; 36 = 3 tons; 48 = 4 tons; 60 = 5 tons
- **Blower** — V = Variable Speed Blower Motor
- **Voltage** — P = 208/230V-1phase-60Hz
- **Major Revision Sequence** — 1 = 1st Generation
- **Minor Revision Sequence** — A = 1st Generation

Form Number 211096 | April 2026
Supersedes all previous versions

CONTENTS

Approvals And Warranty 2
Blower Data 15
Control Options 7
Cooling Ratings 10
Dimensions 17
- Accessories 18
- Unit 17
Electrical Data 8
Electric Heat Capacities 14
Electric Heat Data 14
Features 3
Field Wiring 16
Heating Ratings 13
Installation Clearances 16
Model Number Identification. 1
Optional Accessories - Order Separately 9
Specifications 8

APPROVALS AND WARRANTY

APPROVALS

- AHRI Standard 210/240-2023 Certified
- Design Certified by ETL Intertek
- ENERGY STAR® certified units are designed to use less energy, help save money on utility bills, and help protect the environment
- Cooling/Heating system rated according to DOE test procedures
- Heating ratings are according to Department of Energy (DOE) test procedures and Federal Trade Commission (FTC) labeling regulations and are Certified by AHRI
- Units are ETL Certified for the U.S. and Canada
- All models meet UL 60335-2-40 Refrigerant Detector Requirements
- All models with the Optional Seismic Strapping Kit installed have Seismic Certification for 2018 International Building Code (IBC) and 2019 California Building Code (CBC) ASCE 7
- Unit and components are UL bonded for grounding to meet safety standards for servicing
- Optional electric heaters are ETL listed for the US and Canada and are rated and tested according to DOE test procedures and FTC labeling regulations
- Test operated at the factory before shipment ensuring dependable operation at start-up
- Seismic Certification (with Seismic Strapping Kit applied): Latest Edition of International Building Code, California Building Code, and ASCE 7-16

WARRANTY

- Compressor:
  - Limited ten years in residential installations
  - Limited five years in non-residential installations
- All other covered components:
  - Limited five years in residential installations
  - Limited one year in non-residential installations

NOTE - Refer to Lennox® Basic Limited Warranty at www.Lennox.com for additional details.

FEATURES

APPLICATIONS

- Designed for outdoor installations at ground level or rooftop for residential applications.

NOTE - Units are not approved for zoning applications.

COOLING/HEATING SYSTEM

R-454B Refrigerant
- Low GWP (Global Warming Potential)
- Zero ODP (Ozone Depletion Potential)
- Low Toxicity/Lower Flammability - A2L
- Unit is factory pre-charged

Indoor and Outdoor Coils
- Copper tube with aluminum fin coils

Anti-Microbial Indoor Coil Drain Pan
- Anti-Microbial additive resists growth of mold and mildew on drain pan which improves indoor air quality and reduces drain line blockage
- Drain pan overflow switch monitors condensate level in drain pan and shuts down unit if drain becomes clogged
- Fully insulated to reduce condensation

Outdoor Coil Fan
- Weather protected heavy duty condenser fan motor
- Coated steel fan blades for long life
- Corrosion-resistant coated steel fan guard
- Internally mounted
- Totally enclosed fan motor

Four-Way Reversing Valve
- Rapid changeover of refrigerant flow direction from cooling to heating and vice versa
- Operates on pressure differential between outdoor unit and indoor coil
- Factory installed

High Pressure Switch
- Protects the system from high pressure conditions
- Automatic reset

Loss of Charge Switch
- Shuts off unit if suction pressure falls below setting
- Loss of charge and freeze-up protection

Service Valves
- Fully serviceable brass valves installed in discharge and liquid lines

LOW GWP REFRIGERANT DETECTION SYSTEM (RDS)

- Complies with UL 60335-2-40 approved standard
- Required for all systems using R-454B refrigerant
- Factory installed on all units
- Consists of a leak detection sensor(s) and a mitigation control
- Ensures safe operation for systems equipped with R-454B refrigerant
- Sensor(s) monitors indoor coil area for any refrigerant leaks if they occur
- If a leak is detected the refrigerant detection system will prevent compressor and heating operation until a leak is no longer detected
- Refrigeration detection system energizes blower while a leak is detected to mitigate any concentrations of refrigerant from the unit and the system

COMPRESSOR

Two-Stage Scroll Compressor
- High volumetric efficiency
- Uniform suction flow
- Constant discharge flow
- Quiet operation
- High volumetric efficiency
- Uniform suction flow
- Constant discharge flow
- Quiet operation
- A 24-volt DC solenoid valve inside the compressor controls staging
- When the solenoid is de-energized the lift ring assembly moves to unblock the compressor ports and the compressor operates at part-load or approximately 67% of its full-load capacity
- The “loading” and “unloading” of the two stage scroll is done “on the fly” without shutting off the single-speed compressor motor between stages
- Compressor motor is internally protected from excessive current and temperature
- Compressor is installed in the unit on specially formulated, resilient rubber mounts for better sound dampening and vibration free operation

COMPRESSOR(Continued)

Optional Accessories

Compressor Crankcase Heater
- Protects against refrigerant migration that can occur during low ambient operation

Compressor Hard Start Kit
- A PSC compressor motor does not normally need a potential relay and start capacitor
- In cases of low voltage, kit may be required to increase the compressor starting torque

Compressor Timed-Off Control
- Prevents compressor short-cycling
- Allows time for suction and discharge pressure to equalize
- Permits compressor start-up in an unloaded condition
- Automatic reset
- Five minute delay between compressor shut-off and start-up

Low Ambient Kit (40°F)
- Cycles the outdoor fan while allowing compressor operation in the cooling cycle
- This intermittent fan operation allows the system to operate without icing the evaporator coil and losing capacity
- Designed for use in ambient temperatures no lower than 40°F

NOTE - A crankcase heater must be installed on the compressor.

SUPPLY AIR BLOWER

Direct Drive Blower
- Blower wheel statically and dynamically balanced
- Multi-speed operation is achieved by the use of an ECM (Electronically Commutated Motor) variable speed motor
- Blower assembly easily removed for servicing

ECM Variable Speed Blower Motor
- Variable speed motor maintains specified air volume from 0 though 0.80 in. w.g. static range
- Motor is controlled by the blower control
- Change in blower speed is easily accomplished by simple jumper pin change on blower control
- Motor is resiliently mounted

INDOOR AIR QUALITY (Option)

Healthy Climate® PCO Accessory
- The Healthy Climate® PCO Accessory uses photocatalytic oxidation (PCO) technology to significantly reduce levels of airborne volatile organic compounds, cooking odors and common household odors
- Lennox' Healthy Climate® PCO Accessory is mounted internally to the unit cabinet for superior indoor air quality
- Kit contains PCO cartridge, UVA lamp, UVA lamp holder assembly, ballast box, wiring harness and all necessary hardware

NOTE - The Healthy Climate® PCO Accessory cannot be used with the Internal Filter Rack Kit. High efficiency filtration external to the return air inlet and the PCO accessory in the unit is required and must be field supplied.

Internal Filter Rack Kits
- Available for 1 in. thick filters. Kit contains filter rails for mounting filters internal to unit
- Filters are not furnished and must be field provided

NOTE - The Internal Filter Rack Kit cannot be used with the Healthy Climate® PCO Accessory.

NOTE - Maximum acceptable filter efficiency is MERV 11.

ELECTRIC HEAT (Option)

- Field install internal to unit cabinet
- 5 - 20 kW sizes
- Helix wound nichrome heating elements exposed directly in air stream resulting in instant heat transfer, low element temperatures and long service life
- Cutoff limit control provides positive protection in case of excessive temperatures.
- Factory assembled with controls installed and wired.

Optional Accessories

Single Point Power Supply Kits
- Control Box used with optional electric heat
- For single power supply connected to multi-circuit electric heat

NOTE - Side power entry only.

FEATURES

CABINET

- Conditioned areas insulated with foil faced insulation
- Minimizes heat loss and reduce operating sound levels
- Powder paint for maximum durability
- Easy service access
- Steel louvered panels provides complete coil protection
- Full perimeter heavy-gauge galvanized steel base rail
- Base rails have rigging holes
- Two sides of the base rail have forklift slots
- Raised edges around duct and power entry openings in the bottom of the unit for water protection

Airflow Choice

- Units are shipped with all air openings sealed
  - For downflow (vertical) applications, remove the downflow duct covers
  - For horizontal applications, remove the horizontal duct covers

Electrical Inlets and Service Valves

- Standard field wiring electrical inlets are located in one central area of the cabinet
- See dimension drawing
- Gauge ports are located inside the cabinet

Optional Accessories

Base Rail Opening Closure Kit

- Kit consists of panels and hardware to cover base rail rigging holes and forklift slot openings

Bottom Gas Entry Kit

- Allows gas piping through the unit base pan

Bottom Power Entry Kit

- Allows field wiring through the unit base pan

Rectangular to Round Duct Adaptor Kits

- Downflow or horizontal kits available
- Converts rectangular supply and return air openings on unit cabinet to round diameter
- Several sizes available

Clip Curb (Full Perimeter)

- Interlocking tabs fasten corners together
- No tools required
- Fully gasketed around curb perimeter and supply and return openings
- Available in 8, 14, 18 and 24 inch heights
- Shipped knocked down

Adjustable Pitch Roof Curb (Full Perimeter)

- Fully adjustable pitch curb provides a level platform for packaged units
- Allows flexible installations on roofs with sloped or uneven angles
- Adjustable from 2/12 to 6/12 pitch
- Fully gasketed around curb perimeter and supply and return openings
- Clip Curb (knock-down) and Welded models available

All Curbs

- IBC 2018 compliant
- CBC 2019 compliant
- Seismic rating - SDS 2.0g, z/h=1, Ip=1.5
- Wind rating - 240 mph (Lateral), 214 mph (Uplift)
- Maximum load rating - 800 lbs.

Adaptor Curbs (not shown)

- Curbs are regionally sourced
- Dimensions vary based upon the source

NOTE - Contact your local sales representative for a detailed cut sheet with applicable dimensions.

Strapping Kit - Seismic

- Heavy-gauge galvanized steel
- Kit contains 4 brackets and mounting hardware

FEATURES

CONTROLS

Refrigerant Detection System (RDS) Control

- Monitors leak detection sensor
- Connections for external RDS alarm system (not furnished)
- LED for power, monitoring and sensor status
- Test/Reset button for troubleshooting

Electronic Blower Control

- Two Stages - HEAT and COOL (with four different air volume selections for each) are made by simple jumper pins
- ADJUST jumper pin allows approximately 10% higher, normal or 10% lower motor speed selection within (COOL) speeds selected for fine tuning air volume
- See Blower Data tables

NOTE - HEAT speeds are not affected by jumper change.

- Cooling Airflow Ramp Up - At the beginning of a call for cooling, the blower will run at 82% of full airflow for 7.5 minutes
- Improves the system's moisture removal and saves blower power during cooling start
- Reduced Airflow Operation - For situations where humidity control is an issue, the variable speed motor can be connected to operate at a 25% reduction of the normal airflow rate
- Variable speed motor interface provides for connection of a thermostat with humidity control or a humidistat on the HUM terminal

NOTE - When connected, the dehumidifier resistor on the interface must be cut.

- The control should be wired to open during high humidity, which will reduce blower airflow

Defrost Control

- Defrost Control
- Furnished as standard
- Provides a demand defrost cycle whenever system heating performance falls below optimum levels
- Sensing element on coil determines when defrost cycle is required and when to terminate cycle
- Anti-short cycle (5 minutes) incorporated into the control
- Diagnostic LEDs furnished as an aid in troubleshooting
- Conveniently located in control box

24 Volt Transformer

- 40VA transformer furnished and factory installed in control area

Optional Accessories

Thermostat

- Thermostat is not furnished with unit
- See Page 7

CONTROL OPTIONS

E40 Smart Wi-Fi Thermostat

- 3 Htg.-2 Clg.
- 7-day, universal, programmable, touchscreen thermostat
- Controls dehumidification during cooling mode and humidification during heating mode
- Smooth Setback Recovery and compressor short-cycle protection
- One-Touch Away Mode, Smart Away™ (geo-fencing), equipment maintenance reminders and scheduling
- Smart home automation compatible with Amazon Alexa®, Google Assistant, Control4®, Building36®, Matter and IFTTT
- Lennox® Home App controls temperature, fan operation, set programs/schedules and set Away mode on a smartphone
- Lennox Smart Tech App allows the installer to commission the system and remotely turn the system on and off during setup or service call on a smartphone

M40 Smart Wi-Fi Thermostat

- 3 Htg.-2 Clg.
- 7-day, universal, programmable, touchscreen thermostat
- Smooth Setback Recovery and compressor short-cycle protection
- One-Touch Away Mode, Smart Away™ (geo-fencing), equipment maintenance reminders and scheduling
- Smart home automation compatible with Amazon Alexa®, Google Assistant, Control4®, Building36®, Matter and IFTTT
- Lennox® Home App controls temperature, fan operation, set programs/schedules and set Away mode on a smartphone
- Lennox Smart Tech App allows the installer to commission the system and remotely turn the system on and off during setup or service call on a smartphone

NOTE - Please refer to the individual Product Specifications for these products for full information.

CONTROLS - ORDERING

E40 Smart Wi-Fi Thermostat	3-3/8 x 5-3/8 x 1	**30L26**
Lennox® Smart Room Sensor	4 x 5-1/2 x 3	**22V25**
Lennox® Smart Air Quality Monitor	3-5/8 x 4-3/8 x 1-3/8	**21P02**
Lennox® Wireless Extender	4 x 5-1/2 x 2-1/2	**22V26**
M40 Smart Wi-Fi Thermostat	3-5/16 x 4-5/16 x 7/8	**30L27**
Thermostat Accessories		
[1] Discharge Air Temperature Sensor (For E40)		**88K38**
[2] Remote Outdoor Air Temperature Sensor (For dual-fuel and Humiditrol®)		**X2658**

[1] Optional for service diagnostics (E40).

[2] Remote Outdoor Air Temperature Sensor is used with conventional (non-Lennox® Communicating) outdoor units (sensor is furnished with Lennox® Communicating outdoor units). Allows the thermostat to display outdoor temperature. Required in dual-fuel and Humiditrol® applications.

SPECIFICATIONS

Size			24	36	48	60
Nominal Tonnage			2	3	4	5
Cooling / Heating Performance	Cooling	Total capacity - Btuh	23,000	34,200	45,000	57,000
		[1] SEER2 (Btuh/Watt)	16.0	15.2	15.2	15.2
		[1] EER2 (Btuh/Watt)	12.0	11.5	11.5	11.5
		Total unit watts	1875	3025	3910	4950
	High Temperature Heat	Total capacity - Btuh	21,400	33,200	45,500	58,000
		[1] HSPF2 (Region IV)	7.2	7.2	7.2	7.2
		[1] COP	3.70	3.50	3.88	3.71
		Total unit watts	1800	2960	3930	5030
	Low Temperature Heat	Total capacity - Btuh	11,900	18,900	24,700	35,700
		[1] COP	2.10	2.20	2.09	2.34
		Total unit watts	1660	2520	3460	4470
[2] Sound Rating Number		dBA	71	71	74	74
Refrigerant		Type	R-454B	R-454B	R-454B	R-454B
		Charge	4 lbs. 8 oz.	6 lbs. 13 oz.	8 lbs. 15 oz.	9 lbs. 4 oz.
Compressor Type (number)			Two-Stage Scroll (1)			
Outdoor Coil		Net face area - ft.^{2}	16.3	15.5	18.6	18.6
		Tube diameter - in.	5/16	5/16	5/16	5/16
		Rows	1	2	2	2
		Fins - in.	22	22	22	22
Outdoor Fan		HP	1/2	1/2	1/2	1/2
		Diameter - in.	22	22	24	24
		Blades	3	3	3	3
Indoor Coil		Net face area - ft.^{2}	4.4	4.4	6.8	6.8
		Tube Diameter - in.	5/16	3/8	3/8	3/8
		Rows	3	3	3	3
		Fins - in.	15	15	15	15
		Condensate drain size (NPT) - in.	3/4	3/4	3/4	3/4
Indoor Blower		HP	1/2	1/2	3/4	1
		Blower wheel size dia. x width - in.	(1) 10 x 6	(1) 10 x 8	(1) 10 x 10	(1) 12 x 10
Net weight of basic unit - lbs.			411	446	526	541
Shipping weight of basic unit - lbs.			421	456	536	551

ELECTRICAL DATA

	Line voltage data (Volts-Phase-Hz)	208/230V-1-60			
	[3] Maximum overcurrent protection (MOCP) amps	25	40	50	60
	[4] Minimum Circuit Ampacity (MCA)	17.1	25.1	31.7	39.7
Compressor	Rated load amps	10.2	15.3	19.5	25.2
Outdoor Coil Fan Motor	Full load amps	2.3	2.3	3.6	3.6
Indoor Blower Motor	Full load amps	2.0	3.7	3.8	4.6

[1] AHRI Certified to AHRI Standard 210/240:
Cooling Ratings - 95°F outdoor air temperature and 80°F db/67°F wb entering indoor coil air.
High Temperature Heating Ratings - 47°F db/43°F wb outdoor air temperature and 70°F entering indoor coil air.
Low Temperature Heating Ratings - 17°F db/15°F wb outdoor air temperature and 70°F entering indoor coil air.

[2] Sound Rating Number rated in accordance with test conditions included in AHRI Standard 270.

[3] HACR type circuit breaker or fuse.

[4] Refer to National or Canadian Electrical Code manual to determine wire, fuse and disconnect size requirements.

OPTIONAL ACCESSORIES - ORDER SEPARATELY

Item		Order Number	Size 24	36	48	60
CONTROLS						
E30 Smart Wi-Fi Thermostat		**20A65**	•	•	•	•
[1] Remote Outdoor Temperature Sensor		**X2658**	•	•	•	•
COOLING SYSTEM						
Compressor Crankcase Heater		**27U17**	•	•		
		27P79			•	•
Compressor Hard Start Kit		**10J42**	•	•		
		12J90			•	•
Compressor Timed-Off Control		**47J28**	•	•	•	•
Low Ambient Kit (40°F)		**21D20**	•	•	•	•
CABINET						
Base Rail Opening Closure Kit		**21J84**	•	•	•	•
Rectangular to Round Duct Adaptor Kits	Downflow - 14 in. dia.	**20X82**	•	•		
	- 14 in. dia.	**21D26**			•	•
	Horizontal - 14 in. dia.	**21J92**	•	•		
	- 14 in. dia.	**21D24**			•	•
	- 16 in. dia.	**22U78**			•	•
	- 18 in. dia.	**22U79**			•	•
ELECTRICAL						
Bottom Power Entry Kit		**21J78**	•	•	•	•
ELECTRIC HEAT						
Electric Heat Size - 208/240V-1ph	5 kW	**10W47**	•	•	•	•
	7.5 kW	**10W48**	•	•	•	•
	10 kW	**10W49**	•	•	•	•
	15 kW	**10W50**		•	•	•
	20 kW	**10W51**			•	•
SINGLE POINT POWER SUPPLY KITS (FOR ELECTRIC HEAT) - SIDE POWER ENTRY ONLY						
Single Point Power Kits	For 5 kW Electric Heat	**13W88**	•	•	•	•
	For 7.5 kW Electric Heat	**13W89**	•	•	•	•
	For 10 kW Electric Heat	**13W90**	•	•	•	•
	For 15-20 kW Electric Heat	**13W91**		•	•	•
INDOOR AIR QUALITY						
[2] Healthy Climate® PCO Accessory		**Y7960**	•	•	•	•
Healthy Climate® PCO Accessory Maintenance Kit (Includes PureAir™ Cartridge and UVA lamp)		**Y7972**	•	•	•	•
[3] Internal Filter Rack Kit (filters not furnished)	(1) 20 x 20 + (1) 14 x 20	**11U73**	•	•		
	(2) 20 x 20	**11U74**			•	•
ROOF CURBS						
Clip Curbs						
	8 in. height	**21J13**	•	•		
		21J17			•	•
	14 in. height	**21J14**	•	•		
		21J19			•	•
	18 in. height	**21J15**	•	•		
		21J20			•	•
	24 in. height	**21J16**	•	•		
		21J25			•	•
Adjustable Pitch Roof Curbs						
Welded Curbs		**22V54**	•	•		
		22V55			•	•
Clip Curbs		**21J26**	•	•		
		21U04			•	•
Strapping Kits for Roof Curbs						
Strapping Kit - Seismic		**21J75**	•	•	•	•

[1] Allows the thermostat to display outdoor temperature.

[2] Filter Rack Kit cannot be used with the Healthy Climate® PCO Accessory. High efficiency filtration between the return air inlet and the PCO accessory is required and must be field supplied.

[3] Filters are not furnished and must be field provided.

COOLING RATINGS

NOTE − For Temperatures and Capacities not shown in tables, see bulletin − Cooling Unit Rating Table Correction Factor Data in Miscellaneous Engineering Data section.

2 TON - LRP15HPK24 — STAGE 1

Entering Wet Bulb Temperature	Total Air Volume	Outdoor Air Temperature Entering Outdoor Coil																			
		85°F					95°F					105°F					115°F				
		Total Cool Cap.	Comp. Motor Input	Sensible To Total Ratio (S/T) Dry Bulb			Total Cool Cap.	Comp. Motor Input	Sensible To Total Ratio (S/T) Dry Bulb			Total Cool Cap.	Comp. Motor Input	Sensible To Total Ratio (S/T) Dry Bulb			Total Cool Cap.	Comp. Motor Input	Sensible To Total Ratio (S/T) Dry Bulb		
	cfm	kBtuh	kW	75°F	80°F	85°F	kBtuh	kW	75°F	80°F	85°F	kBtuh	kW	75°F	80°F	85°F	kBtuh	kW	75°F	80°F	85°F
59°F	520	17.1	.78	.96	1.00	1.00	16.5	.92	.98	1.00	1.00	15.9	1.07	1.00	1.00	1.00	15.2	1.25	1.00	1.00	1.00
	575	17.7	.77	.99	1.00	1.00	17.1	.91	1.00	1.00	1.00	16.4	1.07	1.00	1.00	1.00	15.6	1.24	1.00	1.00	1.00
	630	18.3	.76	1.00	1.00	1.00	17.6	.91	1.00	1.00	1.00	16.9	1.06	1.00	1.00	1.00	16.0	1.24	1.00	1.00	1.00
63°F	520	17.7	.77	.79	.93	1.00	17.0	.91	.80	.95	1.00	16.2	1.07	.82	.98	1.00	15.3	1.24	.85	1.00	1.00
	575	18.1	.77	.82	.96	1.00	17.4	.91	.83	.99	1.00	16.5	1.07	.86	1.00	1.00	15.6	1.24	.89	1.00	1.00
	630	18.5	.76	.84	1.00	1.00	17.7	.91	.86	1.00	1.00	16.9	1.06	.89	1.00	1.00	16.1	1.24	.92	1.00	1.00
67°F	520	18.9	.76	.63	.77	.90	18.1	.90	.64	.78	.92	17.2	1.06	.66	.80	.95	16.2	1.24	.68	.83	.98
	575	19.3	.75	.65	.79	.93	18.5	.90	.66	.81	.96	17.6	1.06	.68	.84	.99	16.5	1.23	.70	.87	1.00
	630	19.6	.75	.67	.82	.97	18.8	.90	.68	.84	.99	17.9	1.05	.70	.87	1.00	16.8	1.23	.72	.90	1.00
71°F	520	19.9	.75	.48	.62	.75	19.1	.89	.49	.63	.76	18.2	1.05	.50	.64	.78	17.2	1.23	.52	.67	.81
	575	20.4	.74	.50	.64	.77	19.5	.89	.50	.65	.79	18.5	1.05	.51	.67	.82	17.5	1.22	.53	.69	.85
	630	20.6	.74	.51	.66	.80	19.8	.89	.51	.67	.82	18.8	1.04	.53	.69	.85	17.9	1.22	.54	.71	.88

2 TON - LRP15HPK24 — STAGE 2

Entering Wet Bulb Temperature	Total Air Volume	Outdoor Air Temperature Entering Outdoor Coil																			
		85°F					95°F					105°F					115°F				
		Total Cool Cap.	Comp. Motor Input	Sensible To Total Ratio (S/T) Dry Bulb			Total Cool Cap.	Comp. Motor Input	Sensible To Total Ratio (S/T) Dry Bulb			Total Cool Cap.	Comp. Motor Input	Sensible To Total Ratio (S/T) Dry Bulb			Total Cool Cap.	Comp. Motor Input	Sensible To Total Ratio (S/T) Dry Bulb		
	cfm	kBtuh	kW	75°F	80°F	85°F	kBtuh	kW	75°F	80°F	85°F	kBtuh	kW	75°F	80°F	85°F	kBtuh	kW	75°F	80°F	85°F
59°F	750	22.8	1.33	.98	1.00	1.00	22.0	1.52	1.00	1.00	1.00	21.0	1.73	1.00	1.00	1.00	20.2	1.98	1.00	1.00	1.00
	850	23.6	1.33	1.00	1.00	1.00	22.8	1.52	1.00	1.00	1.00	21.8	1.74	1.00	1.00	1.00	21.0	1.99	1.00	1.00	1.00
	950	24.4	1.33	1.00	1.00	1.00	23.4	1.53	1.00	1.00	1.00	22.6	1.74	1.00	1.00	1.00	21.6	1.99	1.00	1.00	1.00
63°F	750	23.4	1.33	.80	.95	1.00	22.4	1.52	.82	.97	1.00	21.2	1.73	.84	1.00	1.00	20.2	1.98	.87	1.00	1.00
	850	23.8	1.33	.84	1.00	1.00	22.8	1.52	.86	1.00	1.00	21.8	1.74	.89	1.00	1.00	20.8	1.98	.91	1.00	1.00
	950	24.4	1.33	.87	1.00	1.00	23.4	1.53	.90	1.00	1.00	22.6	1.74	.92	1.00	1.00	21.6	1.99	.96	1.00	1.00
67°F	750	24.6	1.33	.64	.78	.92	23.6	1.53	.65	.80	.95	22.6	1.74	.67	.82	.97	21.4	1.99	.69	.85	1.00
	850	25.2	1.33	.67	.82	.96	24.2	1.53	.68	.84	.99	23.0	1.75	.70	.87	1.00	21.8	1.99	.72	.90	1.00
	950	25.6	1.33	.69	.86	1.00	24.6	1.53	.71	.88	1.00	23.4	1.75	.73	.91	1.00	22.2	1.99	.75	.94	1.00
71°F	750	26.0	1.33	.50	.63	.76	25.0	1.53	.50	.65	.78	23.8	1.75	.51	.66	.80	22.6	2.00	.52	.68	.83
	850	26.4	1.33	.51	.66	.80	25.4	1.53	.52	.68	.82	24.4	1.75	.53	.69	.85	23.2	2.00	.54	.71	.88
	950	27.0	1.34	.52	.69	.84	25.8	1.54	.53	.70	.86	24.8	1.76	.54	.72	.89	23.4	2.00	.55	.74	.92

COOLING RATINGS

NOTE − For Temperatures and Capacities not shown in tables, see bulletin − Cooling Unit Rating Table Correction Factor Data in Miscellaneous Engineering Data section.

3 TON - LRP15HPK36 — STAGE 1

Entering Wet Bulb Temperature	Total Air Volume	Outdoor Air Temperature Entering Outdoor Coil																			
		85°F					95°F					105°F					115°F				
		Total Cool Cap.	Comp. Motor Input	Sensible To Total Ratio (S/T) Dry Bulb			Total Cool Cap.	Comp. Motor Input	Sensible To Total Ratio (S/T) Dry Bulb			Total Cool Cap.	Comp. Motor Input	Sensible To Total Ratio (S/T) Dry Bulb			Total Cool Cap.	Comp. Motor Input	Sensible To Total Ratio (S/T) Dry Bulb		
	cfm	kBtuh	kW	75°F	80°F	85°F	kBtuh	kW	75°F	80°F	85°F	kBtuh	kW	75°F	80°F	85°F	kBtuh	kW	75°F	80°F	85°F
59°F	780	26.8	1.36	.97	1.00	1.00	26.0	1.57	.99	1.00	1.00	24.8	1.80	1.00	1.00	1.00	23.8	2.06	1.00	1.00	1.00
	875	27.8	1.35	1.00	1.00	1.00	27.0	1.56	1.00	1.00	1.00	25.8	1.80	1.00	1.00	1.00	24.8	2.06	1.00	1.00	1.00
	960	28.8	1.35	1.00	1.00	1.00	27.8	1.56	1.00	1.00	1.00	26.6	1.79	1.00	1.00	1.00	25.4	2.06	1.00	1.00	1.00
63°F	780	27.8	1.35	.80	.94	1.00	26.6	1.56	.81	.96	1.00	25.2	1.80	.84	.98	1.00	24.0	2.06	.86	1.00	1.00
	875	28.4	1.35	.83	.98	1.00	27.2	1.56	.85	1.00	1.00	25.8	1.80	.87	1.00	1.00	24.6	2.06	.90	1.00	1.00
	960	29.0	1.34	.85	1.00	1.00	27.8	1.56	.88	1.00	1.00	26.6	1.79	.91	1.00	1.00	25.4	2.06	.94	1.00	1.00
67°F	780	29.4	1.34	.64	.78	.91	28.2	1.55	.65	.79	.93	26.8	1.79	.66	.82	.95	25.6	2.06	.69	.84	.98
	875	30.0	1.34	.67	.81	.95	28.8	1.55	.68	.83	.98	27.4	1.79	.69	.85	1.00	26.2	2.05	.71	.88	1.00
	960	30.6	1.33	.69	.84	.99	29.4	1.55	.70	.86	1.00	28.0	1.78	.71	.89	1.00	26.6	2.05	.74	.92	1.00
71°F	780	31.0	1.33	.51	.63	.76	29.8	1.54	.50	.64	.77	28.6	1.78	.52	.65	.80	27.0	2.05	.52	.67	.82
	875	31.8	1.33	.52	.66	.79	30.6	1.54	.52	.67	.81	29.0	1.78	.53	.68	.83	27.6	2.04	.54	.71	.86
	960	32.2	1.32	.53	.68	.82	31.0	1.54	.54	.69	.84	29.6	1.77	.54	.71	.87	28.0	2.04	.56	.73	.90

3 TON - LRP15HPK36 — STAGE 2

Entering Wet Bulb Temperature	Total Air Volume	Outdoor Air Temperature Entering Outdoor Coil																			
		85°F					95°F					105°F					115°F				
		Total Cool Cap.	Comp. Motor Input	Sensible To Total Ratio (S/T) Dry Bulb			Total Cool Cap.	Comp. Motor Input	Sensible To Total Ratio (S/T) Dry Bulb			Total Cool Cap.	Comp. Motor Input	Sensible To Total Ratio (S/T) Dry Bulb			Total Cool Cap.	Comp. Motor Input	Sensible To Total Ratio (S/T) Dry Bulb		
	cfm	kBtuh	kW	75°F	80°F	85°F	kBtuh	kW	75°F	80°F	85°F	kBtuh	kW	75°F	80°F	85°F	kBtuh	kW	75°F	80°F	85°F
59°F	1050	34.2	2.21	.96	1.00	1.00	33.0	2.48	.98	1.00	1.00	31.8	2.81	1.00	1.00	1.00	30.2	3.18	1.00	1.00	1.00
	1200	35.8	2.22	1.00	1.00	1.00	34.2	2.49	1.00	1.00	1.00	33.0	2.81	1.00	1.00	1.00	31.6	3.19	1.00	1.00	1.00
	1300	36.6	2.22	1.00	1.00	1.00	35.0	2.50	1.00	1.00	1.00	33.8	2.82	1.00	1.00	1.00	32.2	3.20	1.00	1.00	1.00
63°F	1050	35.4	2.22	.79	.93	1.00	34.0	2.49	.81	.95	1.00	32.2	2.81	.83	.98	1.00	30.4	3.19	.85	1.00	1.00
	1200	36.4	2.22	.83	.98	1.00	34.8	2.50	.85	1.00	1.00	33.0	2.81	.87	1.00	1.00	31.6	3.19	.90	1.00	1.00
	1300	37.0	2.23	.85	1.00	1.00	35.2	2.50	.88	1.00	1.00	33.8	2.82	.90	1.00	1.00	32.2	3.20	.93	1.00	1.00
67°F	1050	37.2	2.23	.64	.77	.90	36.0	2.50	.65	.79	.92	34.2	2.82	.67	.81	.95	32.4	3.20	.68	.84	.98
	1200	38.0	2.23	.67	.81	.95	36.6	2.51	.68	.83	.97	35.0	2.83	.70	.86	1.00	33.0	3.21	.71	.89	1.00
	1300	39.0	2.24	.68	.84	.98	37.2	2.51	.70	.86	1.00	35.4	2.83	.72	.89	1.00	33.6	3.21	.73	.92	1.00
71°F	1050	39.5	2.24	.50	.63	.75	37.6	2.51	.50	.64	.77	36.0	2.84	.52	.66	.79	34.2	3.21	.53	.68	.82
	1200	40.5	2.25	.52	.66	.80	38.5	2.52	.52	.67	.81	36.8	2.84	.54	.69	.84	35.0	3.22	.55	.71	.87
	1300	41.0	2.25	.52	.68	.82	39.0	2.53	.54	.69	.84	37.4	2.85	.54	.71	.87	35.4	3.22	.56	.73	.90

COOLING RATINGS

NOTE − For Temperatures and Capacities not shown in tables, see bulletin − Cooling Unit Rating Table Correction Factor Data in Miscellaneous Engineering Data section.

4 TON - LRP15HPK48 — STAGE 1

Entering Wet Bulb Temperature	Total Air Volume	Outdoor Air Temperature Entering Outdoor Coil																			
		85°F					95°F					105°F					115°F				
		Total Cool Cap.	Comp. Motor Input	Sensible To Total Ratio (S/T) Dry Bulb			Total Cool Cap.	Comp. Motor Input	Sensible To Total Ratio (S/T) Dry Bulb			Total Cool Cap.	Comp. Motor Input	Sensible To Total Ratio (S/T) Dry Bulb			Total Cool Cap.	Comp. Motor Input	Sensible To Total Ratio (S/T) Dry Bulb		
	cfm	kBtuh	kW	75°F	80°F	85°F	kBtuh	kW	75°F	80°F	85°F	kBtuh	kW	75°F	80°F	85°F	kBtuh	kW	75°F	80°F	85°F
59°F	950	34.0	1.62	.92	1.00	1.00	32.6	1.90	.95	1.00	1.00	31.2	2.21	.97	1.00	1.00	29.6	2.55	1.00	1.00	1.00
	1050	35.2	1.62	.95	1.00	1.00	34.0	1.90	.98	1.00	1.00	32.4	2.21	1.00	1.00	1.00	30.6	2.55	1.00	1.00	1.00
	1150	36.4	1.61	.99	1.00	1.00	34.8	1.89	1.00	1.00	1.00	33.4	2.20	1.00	1.00	1.00	31.4	2.54	1.00	1.00	1.00
63°F	950	35.4	1.61	.76	.89	1.00	33.6	1.90	.78	.92	1.00	32.0	2.21	.80	.94	1.00	30.0	2.55	.83	.97	1.00
	1050	36.4	1.61	.79	.93	1.00	34.6	1.90	.81	.95	1.00	32.8	2.20	.83	.98	1.00	30.6	2.55	.86	1.00	1.00
	1150	37.2	1.61	.81	.95	1.00	35.2	1.89	.83	.98	1.00	33.6	2.20	.86	1.00	1.00	31.4	2.54	.89	1.00	1.00
67°F	950	37.8	1.60	.62	.74	.86	36.0	1.89	.63	.76	.89	34.2	2.20	.64	.78	.91	32.0	2.54	.65	.81	.94
	1050	38.5	1.60	.63	.77	.89	36.8	1.89	.64	.78	.92	35.0	2.20	.66	.80	.95	32.8	2.54	.67	.83	.98
	1150	39.5	1.60	.65	.79	.93	37.6	1.89	.66	.81	.95	35.6	2.19	.67	.83	.98	33.4	2.54	.69	.86	1.00
71°F	950	40.0	1.60	.48	.60	.72	38.5	1.88	.49	.62	.74	36.4	2.19	.49	.63	.75	34.2	2.54	.49	.64	.78
	1050	41.0	1.60	.49	.62	.74	39.0	1.88	.50	.63	.76	37.2	2.19	.50	.65	.78	35.0	2.54	.51	.66	.81
	1150	42.0	1.59	.50	.63	.77	40.0	1.88	.50	.65	.79	38.0	2.19	.51	.66	.81	35.4	2.54	.52	.69	.84

4 TON - LRP15HPK48 — STAGE 2

Entering Wet Bulb Temperature	Total Air Volume	Outdoor Air Temperature Entering Outdoor Coil																			
		85°F					95°F					105°F					115°F				
		Total Cool Cap.	Comp. Motor Input	Sensible To Total Ratio (S/T) Dry Bulb			Total Cool Cap.	Comp. Motor Input	Sensible To Total Ratio (S/T) Dry Bulb			Total Cool Cap.	Comp. Motor Input	Sensible To Total Ratio (S/T) Dry Bulb			Total Cool Cap.	Comp. Motor Input	Sensible To Total Ratio (S/T) Dry Bulb		
	cfm	kBtuh	kW	75°F	80°F	85°F	kBtuh	kW	75°F	80°F	85°F	kBtuh	kW	75°F	80°F	85°F	kBtuh	kW	75°F	80°F	85°F
59°F	1400	46.0	2.71	.95	1.00	1.00	44.5	3.05	.97	1.00	1.00	42.5	3.45	.99	1.00	1.00	41.0	3.90	1.00	1.00	1.00
	1540	47.5	2.72	.98	1.00	1.00	46.0	3.07	1.00	1.00	1.00	44.0	3.46	1.00	1.00	1.00	42.0	3.91	1.00	1.00	1.00
	1700	49.0	2.74	1.00	1.00	1.00	47.5	3.09	1.00	1.00	1.00	45.0	3.47	1.00	1.00	1.00	43.0	3.93	1.00	1.00	1.00
63°F	1400	47.5	2.72	.78	.92	1.00	45.5	3.07	.80	.94	1.00	43.5	3.45	.82	.96	1.00	41.0	3.90	.84	.99	1.00
	1540	48.5	2.74	.81	.95	1.00	46.5	3.08	.83	.97	1.00	44.0	3.46	.84	1.00	1.00	42.0	3.91	.87	1.00	1.00
	1700	49.5	2.75	.83	.99	1.00	47.0	3.09	.86	1.00	1.00	45.0	3.47	.88	1.00	1.00	43.0	3.93	.91	1.00	1.00
67°F	1400	50.0	2.76	.63	.76	.89	48.5	3.10	.64	.78	.92	46.0	3.48	.65	.80	.94	43.5	3.93	.67	.82	.97
	1540	51.5	2.77	.65	.79	.93	49.0	3.11	.65	.81	.95	47.0	3.49	.67	.83	.97	44.5	3.94	.69	.85	1.00
	1700	52.0	2.78	.66	.81	.96	50.0	3.12	.68	.84	.98	47.5	3.50	.69	.86	1.00	45.0	3.95	.71	.89	1.00
71°F	1400	53.5	2.80	.48	.62	.74	51.0	3.13	.49	.63	.76	48.5	3.52	.49	.64	.78	46.0	3.96	.50	.66	.80
	1540	54.0	2.81	.49	.64	.77	52.0	3.14	.50	.65	.79	49.5	3.53	.51	.66	.81	47.0	3.97	.51	.68	.83
	1700	55.0	2.82	.50	.66	.80	53.0	3.16	.51	.67	.82	50.0	3.54	.52	.69	.85	48.0	3.98	.53	.71	.88

COOLING RATINGS

NOTE − For Temperatures and Capacities not shown in tables, see bulletin − Cooling Unit Rating Table Correction Factor Data in Miscellaneous Engineering Data section.

5 TON - LRP15HPK60 — STAGE 1

Entering Wet Bulb Temperature	Total Air Volume	Outdoor Air Temperature Entering Outdoor Coil																			
		85°F					95°F					105°F					115°F				
		Total Cool Cap.	Comp. Motor Input	Sensible To Total Ratio (S/T) Dry Bulb			Total Cool Cap.	Comp. Motor Input	Sensible To Total Ratio (S/T) Dry Bulb			Total Cool Cap.	Comp. Motor Input	Sensible To Total Ratio (S/T) Dry Bulb			Total Cool Cap.	Comp. Motor Input	Sensible To Total Ratio (S/T) Dry Bulb		
	cfm	kBtuh	kW	75°F	80°F	85°F	kBtuh	kW	75°F	80°F	85°F	kBtuh	kW	75°F	80°F	85°F	kBtuh	kW	75°F	80°F	85°F
59°F	1130	40.5	2.13	.92	1.00	1.00	39.0	2.47	.94	1.00	1.00	37.4	2.84	.97	1.00	1.00	35.4	3.25	1.00	1.00	1.00
	1260	42.5	2.13	.95	1.00	1.00	40.5	2.46	.97	1.00	1.00	39.0	2.83	1.00	1.00	1.00	36.8	3.25	1.00	1.00	1.00
	1400	44.0	2.12	.98	1.00	1.00	42.0	2.46	1.00	1.00	1.00	40.0	2.83	1.00	1.00	1.00	38.0	3.25	1.00	1.00	1.00
63°F	1130	42.5	2.12	.76	.89	1.00	40.5	2.46	.78	.91	1.00	38.5	2.84	.80	.93	1.00	36.0	3.25	.82	.97	1.00
	1260	44.0	2.12	.78	.92	1.00	42.0	2.46	.80	.94	1.00	39.5	2.83	.82	.97	1.00	36.8	3.25	.85	1.00	1.00
	1400	44.5	2.12	.81	.96	1.00	42.5	2.45	.83	.98	1.00	40.5	2.83	.85	1.00	1.00	38.0	3.25	.89	1.00	1.00
67°F	1130	45.5	2.11	.62	.74	.86	43.5	2.45	.62	.75	.88	41.0	2.83	.63	.77	.91	38.5	3.25	.65	.80	.94
	1260	46.5	2.11	.63	.76	.89	44.5	2.45	.64	.78	.91	42.0	2.83	.65	.80	.94	39.5	3.24	.67	.83	.97
	1400	47.5	2.10	.65	.79	.92	45.5	2.44	.66	.81	.95	43.0	2.82	.67	.83	.98	40.5	3.24	.70	.86	1.00
71°F	1130	48.0	2.10	.48	.60	.72	46.0	2.44	.48	.61	.73	43.5	2.82	.49	.62	.75	41.0	3.24	.50	.64	.77
	1260	49.0	2.10	.49	.61	.74	47.0	2.44	.49	.63	.76	44.5	2.82	.50	.64	.78	42.0	3.24	.51	.66	.81
	1400	50.0	2.09	.49	.63	.77	48.0	2.43	.50	.65	.79	45.5	2.81	.51	.66	.81	42.5	3.24	.52	.69	.84

5 TON - LRP15HPK60 — STAGE 2

Entering Wet Bulb Temperature	Total Air Volume	Outdoor Air Temperature Entering Outdoor Coil																			
		85°F					95°F					105°F					115°F				
		Total Cool Cap.	Comp. Motor Input	Sensible To Total Ratio (S/T) Dry Bulb			Total Cool Cap.	Comp. Motor Input	Sensible To Total Ratio (S/T) Dry Bulb			Total Cool Cap.	Comp. Motor Input	Sensible To Total Ratio (S/T) Dry Bulb			Total Cool Cap.	Comp. Motor Input	Sensible To Total Ratio (S/T) Dry Bulb		
	cfm	kBtuh	kW	75°F	80°F	85°F	kBtuh	kW	75°F	80°F	85°F	kBtuh	kW	75°F	80°F	85°F	kBtuh	kW	75°F	80°F	85°F
59°F	1600	55.0	3.58	.93	1.00	1.00	53.5	4.03	.94	1.00	1.00	51.0	4.55	.97	1.00	1.00	48.5	5.15	1.00	1.00	1.00
	1800	57.5	3.60	.96	1.00	1.00	55.0	4.06	.98	1.00	1.00	53.0	4.58	1.00	1.00	1.00	51.0	5.18	1.00	1.00	1.00
	2000	59.0	3.62	.99	1.00	1.00	57.0	4.08	1.00	1.00	1.00	55.0	4.61	1.00	1.00	1.00	52.0	5.20	1.00	1.00	1.00
63°F	1600	57.5	3.60	.77	.90	1.00	55.0	4.05	.78	.92	1.00	52.5	4.58	.80	.94	1.00	50.0	5.16	.82	.97	1.00
	1800	58.5	3.62	.79	.94	1.00	56.5	4.07	.81	.96	1.00	54.0	4.59	.83	.98	1.00	51.0	5.18	.86	1.00	1.00
	2000	60.0	3.63	.82	.97	1.00	57.5	4.09	.84	.99	1.00	54.5	4.61	.86	1.00	1.00	52.0	5.20	.89	1.00	1.00
67°F	1600	61.0	3.64	.62	.74	.87	58.0	4.10	.63	.76	.89	56.0	4.62	.64	.78	.91	53.0	5.21	.66	.80	.94
	1800	62.5	3.65	.64	.78	.91	60.0	4.12	.65	.79	.93	57.0	4.63	.66	.81	.96	53.5	5.22	.68	.84	.98
	2000	64.0	3.67	.66	.80	.95	61.0	4.13	.67	.82	.97	58.0	4.65	.68	.85	1.00	55.0	5.24	.71	.87	1.00
71°F	1600	64.5	3.67	.48	.61	.73	61.5	4.13	.48	.62	.74	58.5	4.66	.49	.63	.76	55.5	5.25	.49	.64	.78
	1800	66.0	3.69	.49	.63	.76	63.0	4.15	.50	.64	.77	60.0	4.68	.50	.65	.79	56.5	5.26	.51	.67	.82
	2000	67.0	3.70	.50	.65	.79	64.5	4.17	.51	.66	.80	61.0	4.69	.51	.68	.83	58.0	5.29	.52	.70	.86

HEATING RATINGS

Model	Outdoor Temp - DB/WB ºF											
	0/0		5/4		17/15		35/33		47/43		62/56	
	Btuh	kW	Btuh	kW	Btuh	kW	Btuh	kW	Btuh	kW	Btuh	kW
LRP15HPK24	6,800	1.99	8,400	2.46	12,000	3.52	18,000	5.28	22,000	6.45	27,000	7.91
LRP15HPK36	13,600	3.99	15,500	4.54	19,900	5.83	28,500	8.35	34,100	9.99	41,200	12.07
LRP15HPK48	19,100	5.60	21,800	6.39	28,300	8.29	40,200	11.78	48,100	14.10	58,000	17.00
LRP15HPK60	22,500	6.59	26,700	7.82	36,800	10.79	51,400	15.06	61,100	17.91	73,300	21.48

NOTE - Values based on 0.50 in. w.g. external static pressure.

ELECTRIC HEAT DATA

Model			LRP15HPK24		LRP15HPK36		LRP15HPK48		LRP15HPK60	
Voltage			208V	240V	208V	240V	208V	240V	208V	240V
[1] Maximum Overcurrent Protection (MOCP)	5 kW	Circuit 1	30	30	30	35	30	35	30	35
	7.5 kW	Circuit 1	40	45	40	45	40	45	40	45
	10 kW	Circuit 1	50	60	50	60	50	60	60	60
	15 kW	Circuit 1	- - -	- - -	50	60	50	60	60	60
		Circuit 2	- - -	- - -	25	30	25	30	25	30
	20 kW	Circuit 1	- - -	- - -	- - -	- - -	50	60	60	60
		Circuit 2	- - -	- - -	- - -	- - -	50	60	50	60
[1] Maximum Overcurrent Protection (MOCP) with Optional Single Point Power Supply	5 kW		45	45	50	60	60	70	80	80
	7.5 kW		60	60	60	70	70	80	90	90
	10 kW		70	70	80	80	80	90	100	100
	15 kW		- - -	- - -	100	110	100	110	125	110
	20 kW		- - -	- - -	- - -	- - -	125	150	150	150
[2] Minimum Circuit Ampacity (MCA)	5 kW	Circuit 1	25.1	28.5	27.2	30.7	27.3	30.8	28.3	31.8
	7.5 kW	Circuit 1	36.4	41.6	38.5	43.7	38.6	43.8	39.6	44.8
	10 kW	Circuit 1	47.6	54.6	49.8	56.7	49	56.8	50.9	57.8
	15 kW	Circuit 1	- - -	- - -	49.8	56.7	49	56.8	50.9	57.8
		Circuit 2	- - -	- - -	22.6	26	22.6	26	22.6	26
	20 kW	Circuit 1	- - -	- - -	- - -	- - -	49	56.8	50.9	57.8
		Circuit 2	- - -	- - -	- - -	- - -	45.1	52.1	45.1	52.1
[2] Minimum Circuit Ampacity (MCA) with Optional Single Point Power Supply	5 kW		39.7	43.1	47.7	51.2	54.3	57.8	62.3	65.7
	7.5 kW		51.0	56.2	59.0	64.2	65.6	70.8	73.6	78.8
	10 kW		62.2	69.2	70.3	77.2	76.9	83.8	84.8	91.8
	15 kW		- - -	- - -	92.8	103.2	99.5	109.9	107.4	117.8
	20 kW		- - -	- - -	- - -	- - -	122.0	135.9.	130.0	143.9

NOTE - All units have a minimum Short Circuit Current Rating (SCCR) of 5000 amps.

NOTE - Circuit 1 Minimum Circuit Ampacity includes the Blower Motor Full Load Amps.

NOTE- Extremes of operating range are plus and minus 10% of line voltage.

[1] HACR type breaker or fuse.

[2] Refer to National or Canadian Electrical Code manual to determine wire, fuse and disconnect size requirements.

ELECTRIC HEAT CAPACITIES

Input Voltage	5 kW			7.5 kW			10 kW			15 kW			20 kW		
	No of Steps	kW Input	KBtuh Output	No of Steps	kW Input	KBtuh Output	No of Steps	kW Input	KBtuh Output	No of Steps	kW Input	KBtuh Output	No of Steps	kW Input	KBtuh Output
208	1	3.8	12.8	1	5.6	19.2	1	7.5	25.6	1	11.2	38.2	1	15	51.2
220	1	4.2	14.3	1	6.3	21.5	1	8.4	28.7	1	12.6	43	1	16.8	57.3
230	1	4.6	15.7	1	6.9	23.5	1	9.2	31.3	1	13.8	47	1	18.4	62.7
240	1	5	17.1	1	7.5	25.6	1	10	34.1	1	15	51.2	1	20	68.2

BLOWER DATA

LRP15HPK24 Blower Performance

0 through 0.80 in. w.g. External Static Pressure Range

"ADJUST" Jumper Setting	Blower Control Jumper Speed Positions											
	"COOL" Speed - cfm				"HEAT" Speed - cfm				"CONTINUOUS FAN" Speed - cfm			
	A	[1] B	C	D	A	[1] B	C	D	A	B	C	D
+	1100	880	660	440	1150	1035	690	690	550	440	330	220
NORM	1000	800	600	400	1000	900	600	600	500	400	300	200
—	900	720	540	360	1000	900	600	600	450	360	270	180

LRP15HPK36 Blower Performance

0 through 0.80 in. w.g. External Static Pressure Range

"ADJUST" Jumper Setting	Blower Control Jumper Speed Positions											
	"COOL" Speed - cfm				"HEAT" Speed - cfm				"CONTINUOUS FAN" Speed - cfm			
	A	[1] B	C	D	A	[1] B	C	D	A	B	C	D
+	1430	1320	1100	880	1495	1380	1150	1150	715	660	550	440
NORM	1300	1200	1000	800	1300	1250	1000	1000	650	600	500	400
—	1170	1080	900	720	1300	1200	1000	1000	585	540	450	360

LRP15HPK48 Blower Performance

0 through 0.80 in. w.g. External Static Pressure Range

"ADJUST" Jumper Setting	Blower Control Jumper Speed Positions											
	"COOL" Speed - cfm				"HEAT" Speed - cfm				"CONTINUOUS FAN" Speed - cfm			
	A	[1] B	C	D	A	[1] B	C	D	A	B	C	D
+	1980	1760	1540	1320	2070	1840	1610	1610	990	880	770	660
NORM	1800	1600	1400	1200	1800	1600	1400	1400	900	800	700	600
—	1620	1440	1260	1080	1800	1600	1400	1400	810	720	630	540

LRP15HPK60 Blower Performance

0 through 0.80 in. w.g. External Static Pressure Range

"ADJUST" Jumper Setting	Blower Control Jumper Speed Positions											
	"COOL" Speed - cfm				"HEAT" Speed - cfm				"CONTINUOUS FAN" Speed - cfm			
	A	[1] B	C	D	A	[1] B	C	D	A	B	C	D
+	2200	1980	1760	1540	2300	2070	1840	1840	1100	990	880	770
NORM	2000	1800	1600	1400	2000	1800	1600	1600	1000	900	800	700
—	1800	1620	1440	1260	2000	1800	1600	1600	900	810	720	630

[1] Factory Settings.

NOTE - All air data is measured external to unit without air filters.

NOTE - 1st Stage airflow is 70% of 2nd Stage airflow (full capacity) in cooling mode.

ACCESSORY AIR RESISTANCE DATA - in. w.g.

Air Volume cfm	Rectangular to Round Duct Adaptor Kits					
	Downflow		Horizontal			
	14 in. Diameter		14 in. Diameter		16 in. Diameter	18 in. Diameter
	24, 36	48, 60	24, 36	48, 60	48, 60	48, 60
500	0.03	- - -	0.04	- - -	- - -	- - -
600	0.05	- - -	0.07	- - -	- - -	- - -
700	0.08	0.13	0.08	0.13	- - -	- - -
800	0.10	0.17	0.12	0.16	- - -	- - -
900	0.12	0.21	0.15	0.21	- - -	- - -
1000	0.17	0.24	0.19	0.25	0.11	0.03
1100	0.18	0.30	0.23	0.30	0.11	0.03
1200	0.20	0.36	0.29	0.37	0.13	0.03
1300	0.26	0.43	0.31	0.43	0.17	0.03
1400	0.31	0.50	0.39	0.51	0.20	0.03
1500	- - -	0.57	- - -	0.57	0.21	0.05
1600	- - -	0.63	- - -	0.65	0.26	0.05
1700	- - -	0.71	- - -	0.72	0.30	0.06
1800	- - -	0.80	- - -	0.81	0.30	0.06
1900	- - -	0.91	- - -	0.90	0.40	0.06
2000	- - -	0.99	- - -	1.01	0.41	0.06

FIELD WIRING

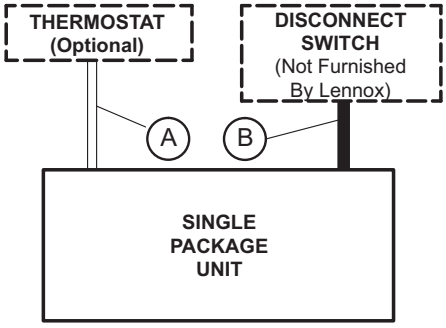

A − Seven Wire Low Voltage (Electronic)
B − Two Wire Power (See Electrical Data Table)

If multiple disconnects are used on units with electric heat; there must be two−wire power provided for each disconnect

− Field Wiring Not Furnished −

INSTALLATION CLEARANCES

	in.	mm
Front	24	610
Right Side (blower access)	24	610
Left Side (evaporator coil access)	24	610
Back	0	0
Top	48	1219

DIMENSIONS UNIT

Size	CORNER WEIGHTS								CENTER OF GRAVITY			
	AA		BB		CC		DD		EE		FF	
	lbs.	kg	lbs.	kg	lbs.	kg	lbs.	kg	in.	mm	in.	mm
24	96	44	107	49	117	53	105	48	21	533	21-1/2	546
36	104	47	116	53	126	57	114	52	21	533	21-1/2	546
48	124	56	134	61	147	67	135	61	25-1/4	641	21-1/2	546
60	127	58	138	63	151	68	139	63	25-1/4	641	21-1/2	546

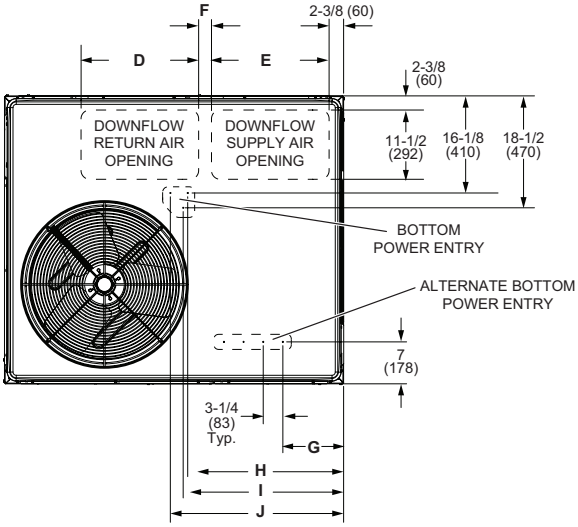

TOP VIEW (Base)

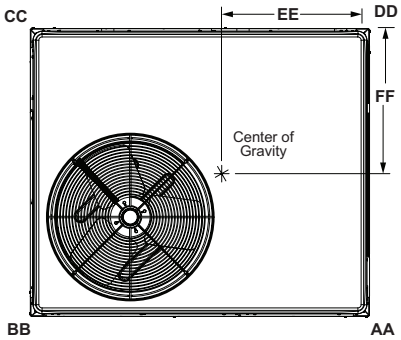

TOP VIEW
(Corner Weight and Center of Gravity)

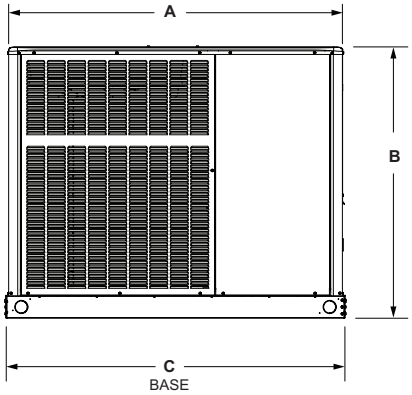

FRONT VIEW

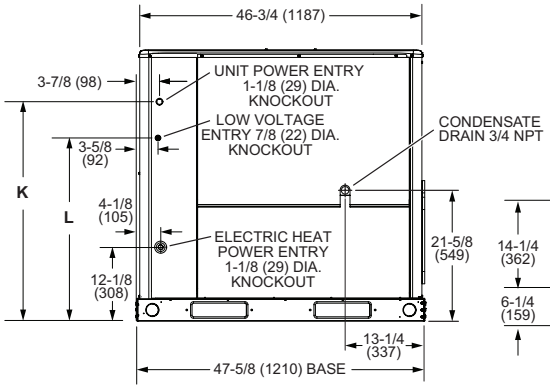

RIGHT SIDE VIEW

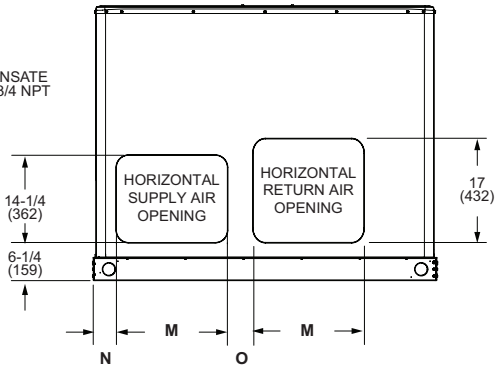

BACK VIEW

Size	A		B		C		D		E		F		G		H	
	in.	mm	in.	mm	in.	mm	in.	mm	in.	mm	in.	mm	in.	mm	in.	mm
24, 30, 36	47-5/8	1210	40-7/8	1038	47-5/8	1210	16-3/4	425	14	356	2	51	4-1/2	114	20-1/4	514
42, 48, 60	55-1/4	1403	44-7/8	1140	56-1/8	1426	19-1/2	495	19-1/2	495	2-1/8	54	10	254	25-7/8	657

Size	I		J		K		L		M		N		O	
	in.	mm	in.	mm	in.	mm	in.	mm	in.	mm	in.	mm	in.	mm
24, 30, 36	21	533	23-1/4	591	32-1/4	819	26-1/4	667	13-1/2	343	3-1/8	79	5-7/8	149
42, 48, 60	26-1/2	673	26-3/4	679	36-1/4	921	30-1/4	768	18-1/4	463	3-3/4	95	4-3/8	111

CLIP CURB

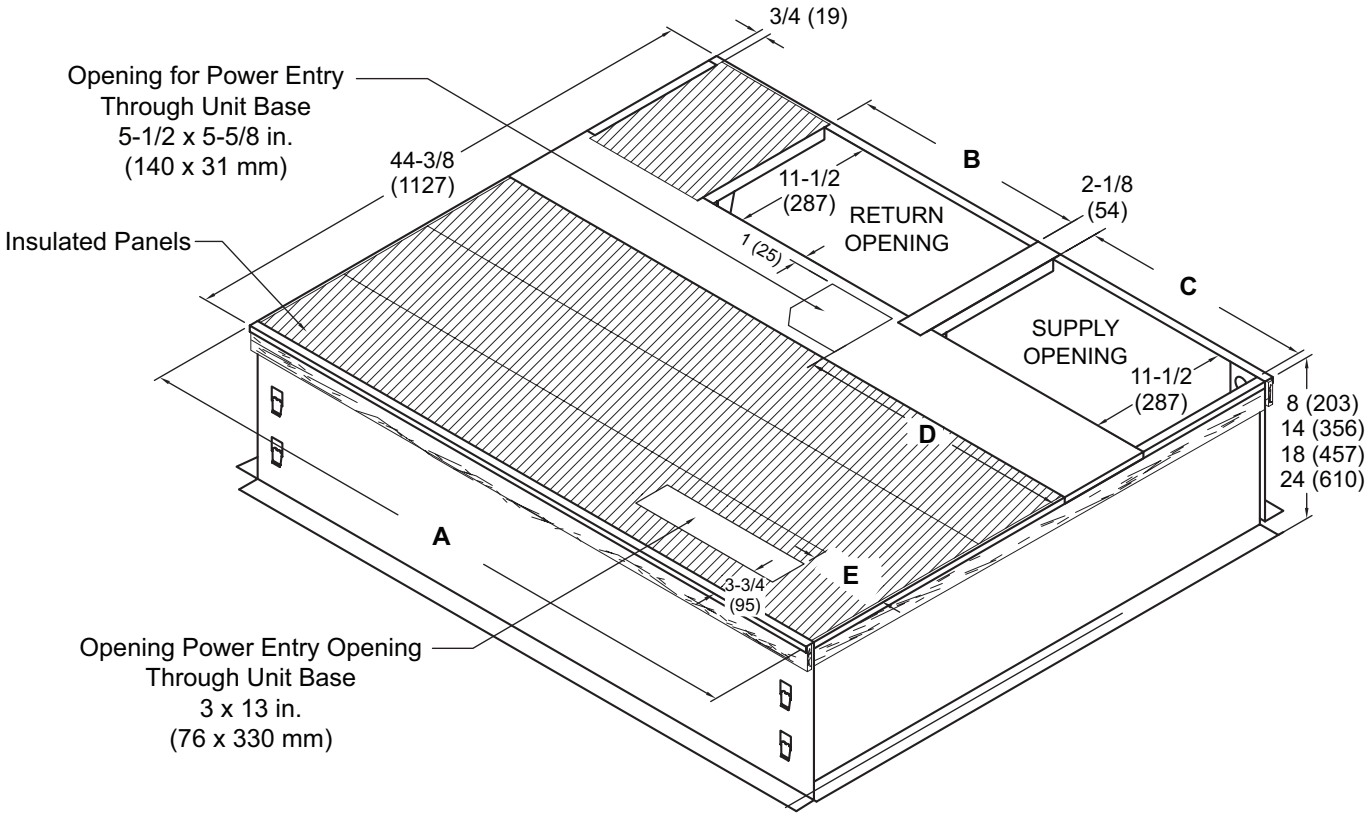

NOTE - Roof deck may be omitted within confines of curb.

TYPICAL FLASHING DETAIL FOR ROOF CURB

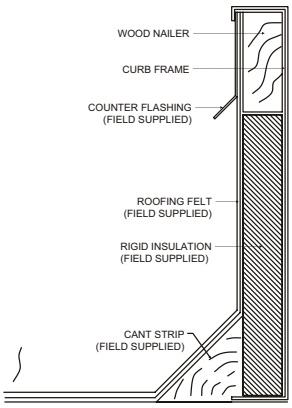

DETAIL ROOF CURB

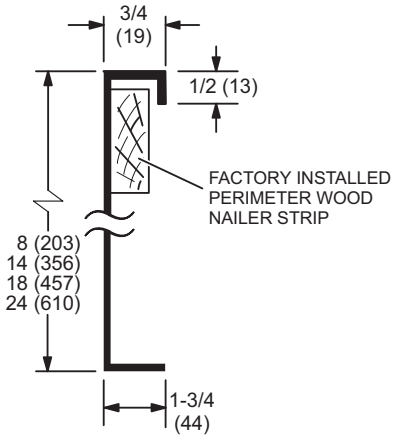

Usage	A		B		C		D		E	
	in.	mm	in.	mm	in.	mm	in.	mm	in.	mm
24, 36	44-3/8	1127	16-7/8	429	13-7/8	352	17-1/4	438	1-1/4	32
48, 60	52-7/8	1343	19-1/2	380	19-1/2	352	23-1/8	587	7	178

ADJUSTABLE PITCH ROOF WELDED CURB

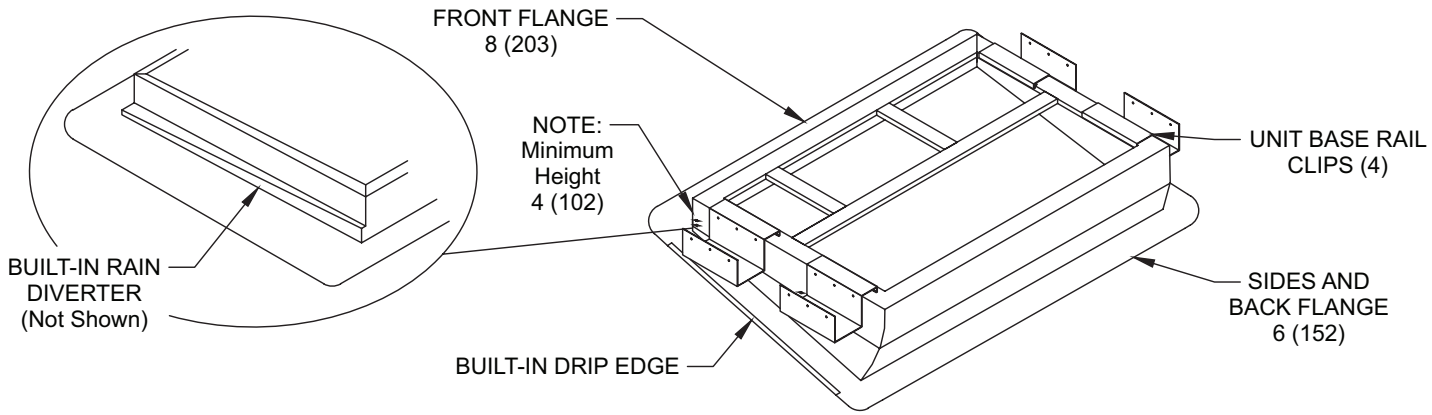

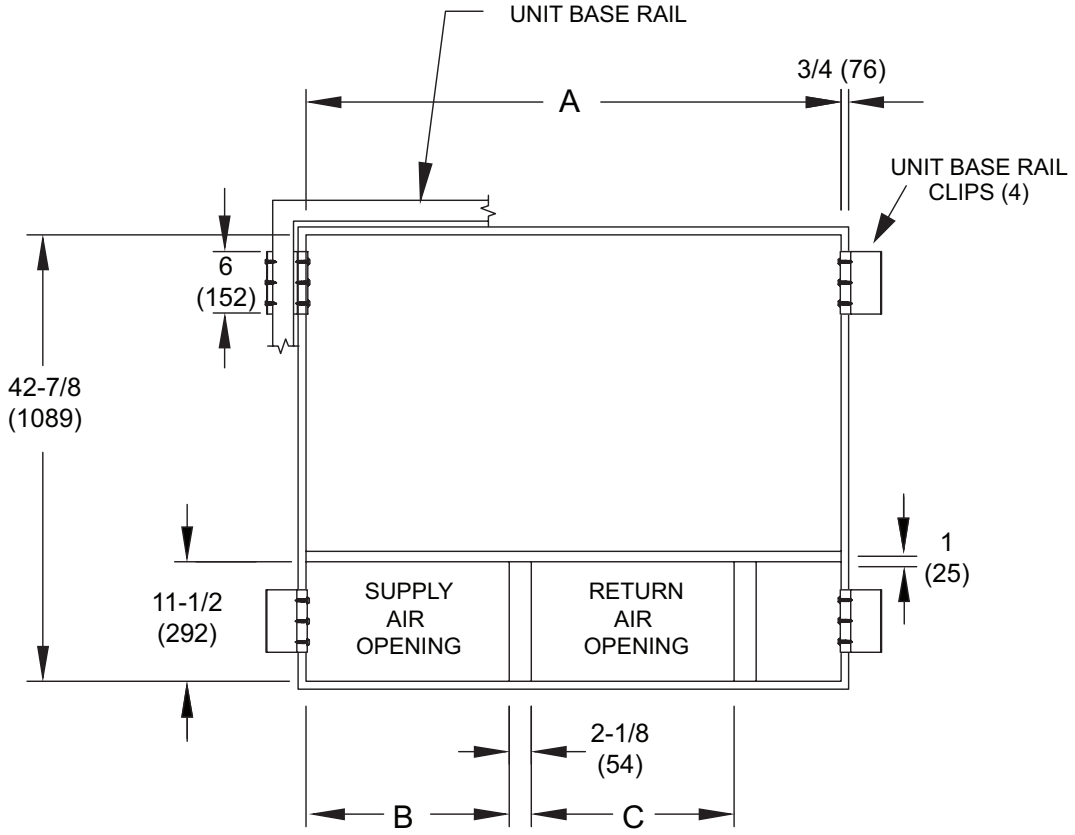

Usage	A		B		C	
	in.	mm	in.	mm	in.	mm
24, 36	42-7/8	1089	13-7/8	352	16-7/8	429
48, 60	51-3/8	1305	19-1/2	495	19-1/2	495

ADJUSTABLE PITCH ROOF CLIP CURB

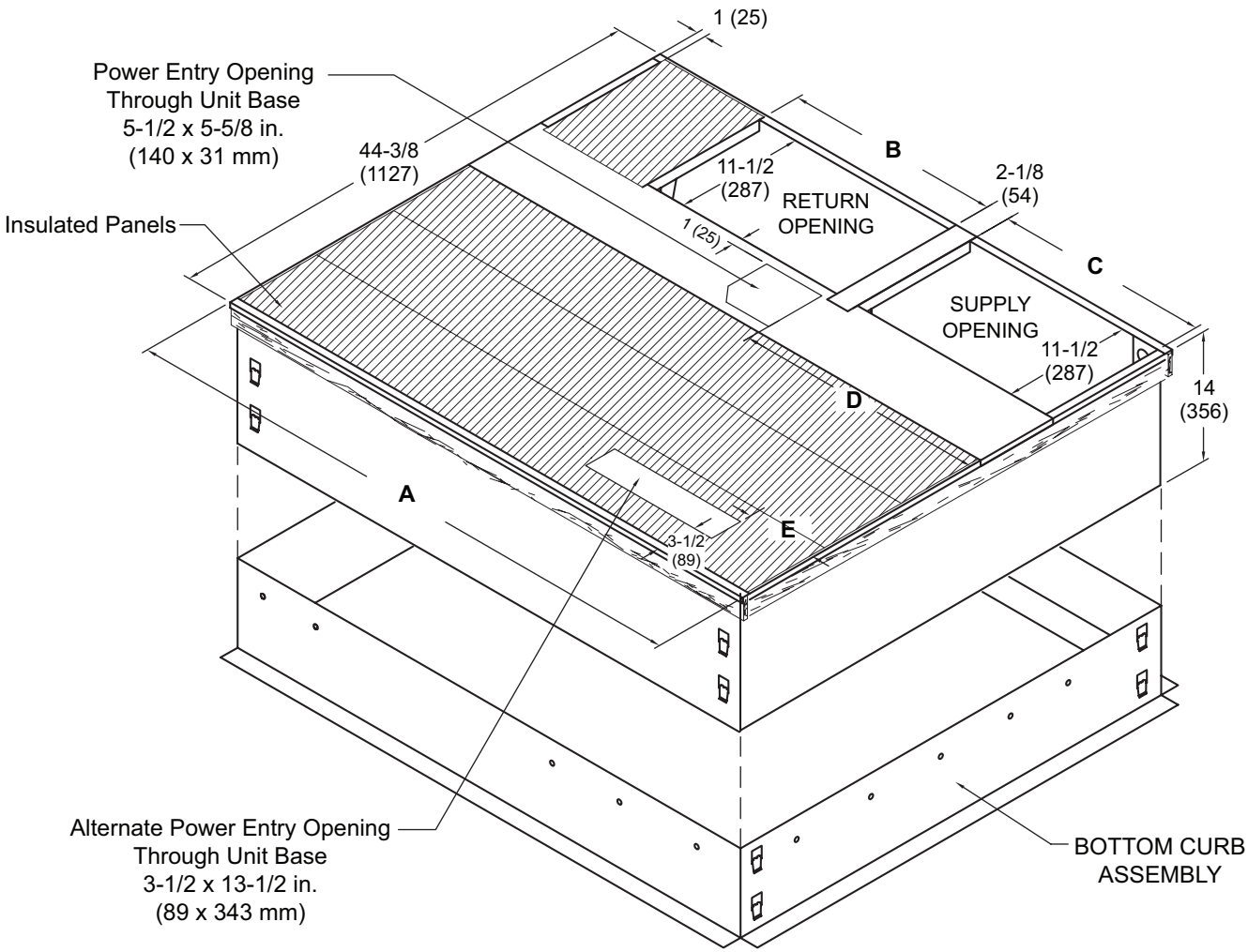

NOTE - Roof deck may be omitted within confines of curb.

TYPICAL FLASHING DETAIL FOR ROOF CURB

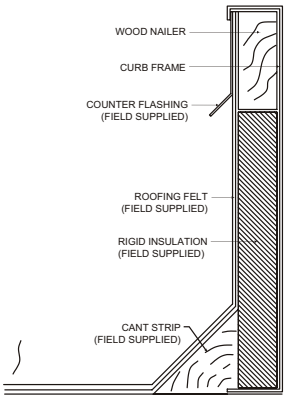

DETAIL ROOF CURB

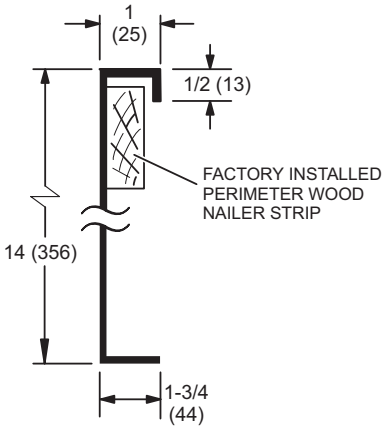

Usage	A		B		C		D		E	
	in.	mm	in.	mm	in.	mm	in.	mm	in.	mm
24, 36	44-3/8	1127	16-7/8	429	13-7/8	352	17-1/4	438	1-1/4	32
48, 60	52-7/8	1343	19-1/2	380	19-1/2	352	23-1/8	587	7	178

REVISIONS

Sections	Description of Change
Control Options	Updated to reflect latest product offering.
Dimensions	Updated dimension table.

Visit us at www.Lennox.com
For the latest technical information, www.LennoxPros.com
Contact us at 1-800-9-LENNOX

NOTE - Due to Lennox' ongoing commitment to quality, Specifications, Ratings and Dimensions subject to change without notice and without incurring liability.
Improper installation, adjustment, alteration, service or maintenance can cause property damage or personal injury.
Installation and service must be performed by a qualified installer and servicing agency.

©2026 Lennox Industries, Inc.