GAS FURNACES

SLP99DFV

DAVE LENNOX *SIGNATURE*® COLLECTION

Downflow - Variable Capacity - Variable Speed Blower - 60Hz

RESIDENTIAL PRODUCT SPECIFICATIONS

Bulletin No. 210916
July 2024
Supersedes all previous versions

S40 Smart Wi-Fi
Communicating Thermostat
(Not Furnished)

AFUE - 97.5%
Input - 66,000 to 110,000 Btuh
Nominal Add-on Cooling - 2 to 5 Tons

MODEL NUMBER IDENTIFICATION

SL P 99 DF 070 X V 36 B

Unit Type
SL = Dave Lennox *Signature*® Collection

Stages
P = Precise Comfort Technology™

AFUE
99 = 97.5%

Configuration
DF = Downflow

Nominal Gas Heat Input
070 = 66,000 Btuh
090 = 88,000 Btuh
110 = 110,000 Btuh

Low NOx
X = Units meet California Nitrogen Oxides Standard (40 ng/J)

Blower
V = Variable Speed Blower Motor

Nominal Add-On Cooling Capacity
36 = 2-3.5 tons
48 = 4 tons
60 = 4-5 tons

[1] **Cabinet Width**
B = 17-1/2 in.
C = 21 in.

[1] Downflow indoor coils with the same letter designation physically matches the furnace **supply air opening**.

FEATURE HIGHLIGHTS

1. SilentComfort™ Technology
2. Lennox Duralok Plus™ Heat Exchanger
3. Secondary Heat Exchanger
4. Inshot Burners
5. Variable Capacity Gas Control Valve
6. Variable-Speed Combustion Air Inducer
7. SureLight® Integrated Furnace Control
8. Variable Speed Direct Drive Blower
9. Insulated Cabinet
10. Safety Interlock Switch
11. Gas Piping And Electrical Inlets

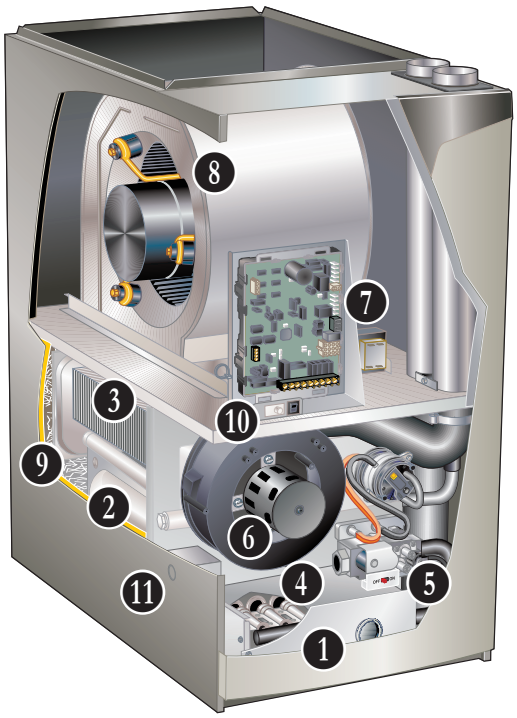

NOTE - SLP99V FURNACES CANNOT BE TWINNED!

CONTENTS

Approvals And Warranty . . . 3
Blower Data . . . 20
Dimensions - Furnace/Coil Combined Dimensions . . . 16
Dimensions - Optional Accessories . . . 15
Dimensions - Optional Accessories - Venting . . . 17
Dimensions - Unit . . . 14
Features . . . 3
Gas Heat Accessories . . . 10
Installation Clearances . . . 15
Optional Accessories - Order Separately . . . 10
Specifications . . . 9

APPROVALS AND WARRANTY

APPROVALS

- AHRI Certified
- CSA International Certified
- Tested and rated according to US DOE test procedures and FTC labeling regulations
- Units are approved for installations from 0 - 4500 ft.
- ENERGY STAR® certified units are designed to use less energy, help save money on utility bills, and help protect the environment
- ISO 9001 Registered Manufacturing Quality System
- Blower data from unit tests conducted in Lennox Laboratory air test chamber

NOTE - This furnace has not been CSA International design certified for installation in mobile homes, recreational vehicles, or outdoors.

California Only

- These furnaces **do not meet** the South Coast Air Quality Management District (SCAQMD) Rule 1111 and San Joaquin Valley Air Pollution Control District (SJVAPCD) Rule 4905 NOx emission limit (14 ng/J) and cannot be installed within the SCAQMD and SJVAPCD areas
- These furnaces are approved by the California Energy Commission and meets California Nitrogen Oxides Standard (NOx) limits of 40 ng/J

WARRANTY

- Duralok Plus™ Aluminized Steel Heat Exchanger:
  - Limited lifetime (twenty year transferable) in residential applications
  - Limited ten years in non-residential applications
- All other covered components:
  - Limited ten years in residential installations
  - Limited one year in non-residential installations

NOTE - Refer to Lennox® Basic Limited Warranty at www.Lennox.com for additional details.

FEATURES

APPLICATIONS

- Input capacities of 66,000, 88,000 and 110,000 Btuh
- Variable heat capacity in increments as small as 1% or as large as needed within minimum/maximum input range
- Energy efficiency (AFUE) - 97.5%
- Compact cabinet for downflow applications without any internal modifications to the unit
- Intake and exhaust venting from the top or sides of the unit

NOTE - Optional kit is required for left side venting.

- Variable speed blower ideal for zoning applications
- Lennox add-on indoor coils, high-efficiency air cleaners and humidifiers can easily be added to furnace
- Shipped factory assembled with controls installed and wired
- Each unit factory test operated to ensure proper operation

ZONING APPLICATIONS

- The SLP99V furnace is designed to work with the Lennox® Smart Zoning System with the Lennox® Communicating Thermostat
- The Lennox® Smart Zoning System provides direct feedback to the SLP99V, controlling both airflow and heat output to precisely match the comfort requirements for up to four zones

HEATING SYSTEM

1 SilentComfort™ Technology
- Patented burner sound enclosure and extra cabinet insulation reduces operating sound levels

2 Lennox Duralok Plus™ Heat Exchanger Assembly
- Lennox developed heat exchanger assembly consists of primary heat exchanger and secondary condenser coil assembly
- Main multi-pass crimped seam design clamshell type
- Constructed of heavy-gauge, aluminized steel
- Designed for normal expansion and contraction with maximum efficiency and minimum resistance to air flow

3
- Secondary heat exchanger condenser coil constructed of aluminum fins fitted to stainless steel tubes
- Coil is factory tested for leaks
- Condensate drain header box assembly located on front of coil
- Compact size permits low overall design of furnace cabinet
- Laboratory life cycle tested in excess of industry standards

HEATING SYSTEM (continued)

Lennox Designed Header Box
- Header box on end of condenser coil collects flue condensate for disposal through condensate drains
- Drains are located on each side of the cabinet for easy field installation of condensate drain trap
- Only one drain is used, the other drain is sealed
- Condensate drain trap is included with the unit for field installation

Lennox Designed Flue Condensate Trap Assembly
- Condensate trap assembly is mounted outside the conditioned air stream
- Assembly can be mounted on either side of cabinet
- Can also be mounted remotely (up to 5 ft. away) from unit
- See Dimension drawing and Installation Instructions
- 90° street elbow furnished for ease of drain trap installation
- Drain connection can be made with field provided PVC pipe or PVC coupling
- Drain cap on trap allows easy cleaning and winterizing

4 Inshot Burners
- Aluminized steel inshot burners provide efficient, trouble-free operation
- Burner venturi mixes air and gas in correct proportion for proper combustion
- Burner assembly can be removed from the unit as a single component for ease of service

5 Variable Capacity Gas Control Valve
- Variable capacity gas control valve adjusts capacity output in increments as small as 1% or as large as needed
- 24 volt redundant combination valve combines manual shut off switch (On-Off), automatic electric valve (dual) and gas pressure regulation into a compact combination control

Flame Rollout Switch
- Factory installed on burner box
- Switch provides protection from abnormal operating conditions
- Manual reset

SureLight® Hot Surface Ignitor
- Tough, reliable, long-life, trouble-free performance
- Silicon nitride ignitor
- Cemented to steatite block for protection against current leakage
- Ignition leads are constructed of nickel plated copper and are enclosed in high temperature Teflon® insulation for dependable operation

6 Variable Speed Combustion Air Inducer
- Three-phase variable speed inducer motor is controlled by the SureLight Control
- Overload protected (auto-reset)
- Heavy-duty blower prepurges heat exchanger and safely vents flue products
- Operates only during heating cycle

7 Pressure Switch (Two-Stage)
- Proves Combustion Air Inducer operation before allowing gas valve to open

Limit Control
- Primary limit is accurately located on vestibule panel
- Automatic reset

Optional Accessories

High Altitude Pressure Switch Kit
- Required for proper unit operation on installations above 7500 ft.

Natural Gas to LPG/Propane Conversion Kit
- Required for field changeover from natural gas to LPG/Propane
- Includes gas valve and orifices

LPG/Propane to Natural Gas Conversion Kit
- Required for field changeover from LPG/Propane to natural gas

Muffler (US Only)
- Significantly reduces outdoor operating sound levels
- Two-inch diameter muffler is optional for 070 through 110 input models

NOTE - Two-inch muffler is optional for the 110 input model with a maximum vent pipe length of up to 29 ft.
Three-inch diameter muffler is optional for 110 and 135 input models.

NOTE - Three-inch muffler is optional for the 110 input model with a minimum vent pipe length of 30 ft.

- Installed vertically in the exhaust piping
- See Optional Accessory Dimension Drawing

DIRECT VENT SEALED COMBUSTION SYSTEM
- Furnace features a “sealed combustion” system and can only be installed in Direct Vent applications
- In Direct Vent applications, combustion air is supplied from outdoors and flue gases are discharged outdoors

NOTE - Lennox has approved the use of DuraVent® PolyPro® and Centrotherm InnoFlue® manufactured vent pipe and terminations as an alternative to PVC vent pipe. Must be ordered separately.
Tested and listed to the ULC S636 standard in Canada

- The polypropylene venting system must follow the uninsulated and unconditioned space vent lengths listed in the table on 13
- Refer to the Installation Instructions for additional details

FEATURES

DIRECT VENT SEALED COMBUSTION SYSTEM (continued)

Flue Coupling (Furnished)

- Assists with exhaust flue piping connection and servicing
- Includes flexible one 2-inch rubber coupling and two adjustable bands
- Approved for all Lennox 90% furnaces

Optional Accessories

Vent Termination Kits

- Facilitates installation of combustion air intake pipe and flue exhaust pipe
- Refer to venting table in this bulletin to determine pipe size needed and proper termination kit required
- See Optional Accessories table and dimension drawings

Concentric Termination Kit

- 2 or 3 inch kit contains concentric termination assembly, reducer bushing and 45° elbow
- 2 inch kit for -070 model contains an outdoor exhaust accelerator
- Kit requires single hole penetration of roof or wall for installation
- Roof Termination Flashing Kit available for use 2 inch Kits
- CSA certified

Flush-Mount Termination Kit

- Kit contains flush-mount termination, accelerator, mounting template and hardware
- Kit may be used with 2, 2-1/2 or 3 inch pipe

Wall Assembly Termination Kits

Close Couple (US Only)

- 2 or 3 inch kit consists of close-couple, side-by-side PVC piping with galvanized steel wall cover plate for
- Seals and isolates intake and exhaust piping penetration of wall
- Piping spacing and length is sized for proper wall installations
- CSA certified

Close Couple WTK (Canada Only)

- 2 or 3 inch kit contains one insulated faceplate, one insulated exhaust pipe, elbow and fittings

NOTE - Maintain a maximum of 6 inches between the inlet and outlet openings in the installation of the pipes.

Roof Termination Flashing Kit

- For vertical venting through a roof
- 2 or 3 inch kit contains two neoprene rubber roof flashings
- Vent pipe and insulation not furnished
- Flashing Kit can also be used with Concentric Vent Termination Kits used in vertical venting rooftop applications

Left Side Vent Kit

- Allows venting out the left side of the cabinet
- Kit contains left vent tube and seal plate

BLOWER

8 Variable Speed Direct Drive Blower

- Each blower assembly statically and dynamically balanced
- Blower assembly easily removed for servicing

Variable Speed Blower Motor

- Variable speed motor maintains specified air volume from 0 though 0.8 in. w.g. (heating) and 0 through 1.0 in. w.g. (Cooling) static range
- Variable speed operation is achieved by the use of an ECM (Electronically Commutated Motor) motor
- Motor is controlled by furnace control
- Change in blower speed is easily accomplished by simple DIP switch change on furnace control
- See Blower Data tables
- Motor is resiliently mounted

NOTE - When furnaces are used with the Lennox® Smart Zoning System and the Lennox® Communicating Thermostat, the blower motor operates from predetermined minimum - maximum air volumes to satisfy zone requirements.

CONTROLS

9 SureLight® Integrated Furnace Control (Lennox® Communicating)

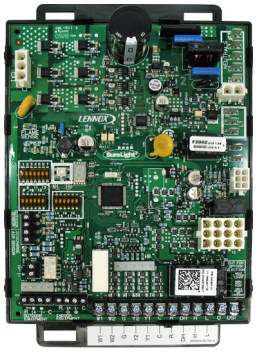

- Advanced control communicates information about various operating parameters in the furnace to the optional Lennox® Communicating Thermostat to constantly maintain the highest level of comfort, performance and efficiency available
- Auto Configuration - On start-up the control automatically sends a description of the unit to the optional Lennox® Communicating Thermostat to automatically configure the number of stages and features available
- Terminals for connecting a conventional heating/cooling thermostat are also provided on the control
- Control also features:
- Innovative AirFlex™ technology allows custom blower settings based on the application
- Precise Comfort Technology™ automatically adjusts blower speed and heat input in increments as small as 1% or as large as needed for greater temperature control
- Variable-speed combustion air inducer is controlled by the SureLight Control. Prior to ignition, a pre-purge cycle for 15 seconds is initiated. After the main burners are turned off, a post-purge cycle for 20 seconds is run

CONTROLS (continued)

- Thermostat Control - Designed to operate in a variable capacity mode automatically adjusting firing rate based on demand and changing conditions

NOTE - For optimal performance, the use of a high-quality, digital two-stage thermostat with adjustable settings for first stage/second stage, on/off differentials and adjustable stage timers is recommended.

Furnace Input Staging Options

Thermostat Type	Input Staging Available
Lennox® Communicating Thermostat	Variable Capacity (increments as small as 1%)
	Four Stage (35, 60, 80, 100%)
Two-Stage (Conventional)	Variable Capacity (increments as small as 1%)
	Two-stage (70% and 100%)
Single-Stage (Conventional)	Three-Stage (35%, 70% and 100%)

- SureLight® Ignition Control - Ignition control continuously monitors line voltage and maintains the igniter power at a constant level to provide consistent lighting and maximum igniter life
- Safety Controls - Flame sensor utilizes flame rectification for safe and reliable operation
- Should flame fail to ignite, control will initiate 4 re-attempts at ignition before locking out unit operation for 60 minutes
- Watchguard type circuit automatically resets ignition controls after one hour of continuous thermostat demand after unit lockout, eliminating nuisance calls for service
- Display LED - Seven segment LED displays alpha-numeric information related to diagnostics as well as system operation and status
- Diagnostic codes are held in non-volatile memory, immune from power interruptions
- Holds up to ten diagnostic codes in order of occurrence for recall on demand
- Port on blower door allows for easy viewing

DIP Switch Settings

NOTE - DIP switches settings are not used with Lennox® Communicating Thermostat.

- Select Thermostat Used - Single-Stage or Two-Stage
- Select Operation Mode - Two-Stage, Three-Stage or Variable Capacity
- Two selectable second stage recognition times (7 and 12 minutes) are available on the control when the furnace is used with a single-stage thermostat
- When used with a two-stage thermostat, furnace will only initiate second stage operation with a second stage thermostat demand
- Heating Speeds - A combination of DIP switch settings allow Normal, 7.5% increase, 15% increase, 7.5% decrease or 15% decrease motor speed selection within heating speed selected for fine tuning air volume
- See Blower Performance tables
- Cooling Speeds - A combination of DIP switch settings allow Normal, 10% increase or 10% decrease motor speed selection within cooling speed selected for fine tuning air volume. See Blower Performance tables
- Blower Speed Ramping (Cooling Mode) - DIP switch settings allow one of four blower speed profiles during cooling operation
  - Profile A (factory setting) - Motor runs at 50% for 30 seconds, then at 82% for 7-1/2 minutes, then at 100% (if needed) until demand is satisfied. Once demand is met, motor runs at 50% for 30 seconds, then ramps down to stop.
  - Profile B - Motor runs at 82% for 7-1/2 minutes and then at 100% (if needed) until demand is satisfied. Once demand is met,motor ramps down to stop.
  - Profile C - Motor runs at 100% until demand is satisfied. Once demand is met, motor runs at 100% for 60 seconds, then ramps down to stop.
  - Profile D - Motor runs at 100% until demand is satisfied. Once demand is met, motor ramps down to stop.
- Dehumidification (Active or Humiditrol® Option) - A jumper on the control must be clipped to enable active dehumidification and/or operation with a Humiditrol® Whole-Home Dehumidification System
- A humidity controlling thermostat or device is also required
- During a call for cooling, air volume is automatically reduced, forcing humidity removal by the air conditioner or heat pump system
- After the humidity has reached the desired set-point the cooling air volume returns to its designed rate
- A dehumidification signal from the thermostat reduces the cooling cfm to 70% of the requested cooling cfm
- Dual-Fuel Operation - A jumper on the control must be clipped to enable operation with a single or two-stage heat pump. The indoor blower is started without delay when a call for heat is received
- Two-Stage Compressor Operation - A jumper on the control must be clipped to enable operation with a two-stage compressor. The cooling blower speeds for first and second stage cooling will be dictated by the applicable DIP switch settings
- Lennox System Operations Monitor Connection - Monitors outdoor unit operation (communicating mode)
- Blower On Time (Heating) - Blower on time is fixed at 30 seconds, blower off time is adjustable from 60, 90, 120 and 180 seconds (factory setting - 90 seconds)
- Blower Off Time (Cooling) - For air-conditioning applications, blower on time is 2 seconds following thermostat demand for cooling
- Blower off delay is 30 seconds at 50% of high cool cfm (factory default)

CONTROLS (continued)

- Controls evaporator humidity by controlling blower and compressor speed on two-stage outdoor units when used with the Lennox® Communicating Thermostat
- Continuous Blower Speed - Adjustable continuous blower speed is a percentage of the high cooling speed selection. There are four selectable options (via DIP switch settings) of 28%, 38% (default setting), 70% and 100%
- Accessory Terminals - Two accessory terminals furnished for additional power supply requirements for 120 volt (less than 1 amp) power humidifiers and powered air cleaners
- One 24 volt humidifier output furnished for non-powered humidifiers.
- Control is factory installed in the unit control box

Discharge Air Averaging Sensor

- Shipped with furnace for field installation in the supply air plenum for "enhanced" commissioning at startup (S40 thermostat only) if required
- Measures temperature rise (heating low/high fire mode) and temperature drop (cooling low/high mode)

24 Volt Transformer (40VA)

- Furnished and factory installed on outside of control box
- Circuit breaker (furnished) is wired in series

Field Wiring Make-up Box

- Furnished for line voltage wiring
- Factory installed internally on left side of furnace
- Box may be installed internally on right side of furnace

Optional Accessories

S40 Smart Wi-Fi Thermostat (part of the Lennox® Residential Communicating Control System)

- Recognizes and connects to all Lennox® Communicating products to automatically configure and control the heating/cooling system (based on user-specified settings) for the highest level of comfort, performance and efficiency

- Recognizes model and serial number information for Lennox® Communicating products to simplify system setup
- Lennox Smart Room Sensors, Lennox Wireless Extenders and Lennox Smart Air Quality Monitor can be added to the system
- Smart home automation compatible with Amazon Alexa®, Google Assistant, Control4® and Building36®
- Sends service alerts and reminders
- Lennox Smart Thermostat App features Wi-Fi remote temperature monitoring and adjustment through a home wireless network apps for smartphones or tablets
- Lennox Smart Technician App allows installer to manage systems in the home
- Service Dashboard features online real-time monitoring and advanced diagnostics of installed Lennox® Communicating systems
- Simple easy-to-use touchscreen allows complete system configuration
- Scheduled maintenance alerts, system warnings and troubleshooting are also displayed on thermostat screen
- Easy to read 7 inch high definition color display (measured diagonally)
- Conventional outdoor units (not Lennox® Communicating) can easily be added and controlled by the S40 Thermostat
- Installer setup screens allow quick and simple system configuration without a manual, Installer can also run tests on complete system or individual components for easy maintenance and troubleshooting
- Serial communications bus (RSBus), with less wiring than a conventional heating/cooling system, allows system communication
- Uses standard 4-wire unshielded thermostat wiring
- High Definition Color Display with Subbase and wallplate furnished for easy installation

NOTE - See the Lennox® S40 Thermostat Product Specifications bulletin in the Controls section for more information.

Remote Outdoor Temperature Sensor

- Allows thermostat to display outdoor temperature
- Automatically detected when connected to thermostat

NOTE - Sensor is required for the Enhanced Dehumidification Accessory (EDA).

NOTE - Sensor is furnished as standard with Lennox® Communicating outdoor units, optional for conventional units.

Thermostat

- Thermostat is not furnished with unit
- Lennox Price Book or selection

Transformer (75VA)

- Recommended when furnace is used with zoning or defrost thermostats and other 24V accessories requiring a higher VA rating
- Circuit breaker (furnished) is wired in series
- Replaces the standard 40VA transformer

FEATURES

CABINET

- Low-profile, narrow width allows easy installation
- Heavy-gauge, cold rolled steel construction
- Pre-painted finish
- Flanges provided on supply air opening for ease of plenum connection
- 10 Insulated with foil faced insulation on sides and back of heating compartment and sealed mat faced insulation in blower compartment
- Sealed blower compartment
- Inner blower compartment access panel seals blower compartment from air leakage
- Complete service access
- Safety interlock switch automatically shuts off power to unit when inner blower compartment access panel is removed
- 11 Gas piping and electrical inlets are provided in both sides of cabinet

Coil Match-Up

- All Lennox downflow indoor coils will physically match the furnace supply air opening with the same letter designation (A, B, C, D) as in the furnace model number

Low Leakage Cabinet

- All models have less than 2% air leakage
- Meets ANSI/ASHRAE Standard 193-2010 "Method of Test for Determining the Air Tightness of HVAC Equipment"

Optional Accessories

Condensate Drain Heat Cable Kits

- Self-limiting wattage heat cable prevents condensate drain from freezing in unconditioned areas
- Available in 6 or 24 ft. lengths

Crawl Space Vent Drain Kit

- Allows venting through a crawl space for upflow and horizontal applications
- Kit for Canada is certified to ULC S636
- Includes 2 or 3 inch sanitary tee, 2 inch PVC assembly, PVC boot and clamp

Downflow Combustible Flooring Base

- Required for heating only units installed on combustible floors
- Not required in add-on cooling applications
- See Dimension Drawing

High Performance Economizer
(Commercial Applications Only)

- Designed for applications requiring outdoor air to be utilized in a commercial HVAC system
- Allows the entry of fresh outdoor air for free cooling, reducing the requirement for mechanical cooling
- Heavy gauge galvanized steel cabinet lined with thick fiberglass insulation
- Mixed air sensor, outdoor air sensor and 24VAC transformer furnished
- Approved for California Title 24 building standards. ASHRAE 90.1-2010 compliant
- See separate Product Specifications bulletin for additional information and available control and sensor options

NOTE - Economizer is not Lennox® communicating compatible.

FILTER (not furnished)

- Filter and provisions for external mounting must be field provided

Optional Accessories

Downflow Filter and Rack Kit

- Filter cabinet mounts directly on top of furnace
- "B" and "C" width cabinets include two filters
- Filter rails are furnished
- Front access for servicing
- Cleanable filter(s) are furnished

REFRIGERATION DETECTION SYSTEM (RDS)

Optional Accessories

Refrigerant Detection System (RDS) Coil Sensor Kit

- Complies with UL 60335-2-40 approved standard
- Required for field installation for all systems using R-454B refrigerant if sensor is not furnished with coil
- Consists of Refrigerant Detection System (RDS) sensor, lineset sleeves, mounting brackets and A2L labeling
- Sensor ensures safe operation for systems equipped with R-454B refrigerant
- Sensor will detect anu R-454B refrigerant

Refrigerant Detection System (RDS) Blower Control Board

Communicating Blower Control Board (Universal)

- Communicating Blower Control Board and Sensor can be used universally with any Lennox® communicating furnace or any non-communicating 24 volt furnace

Non-Communicating Blower Control Board

- Non-Communicating Blower Control Board and Sensor can be used with any non-communicating 24 volt furnace

Standard Features

- Complies with UL 60335-2-40 approved standard
- Required for all systems using R-454B refrigerant
- Connects to the RDS sensor furnished with the RDS Coil Sensor Kit
- Supports up to two RDS Sensors (factory setting)
- Used as an interface between indoor unit and thermostat to control system
- Ensures safe operation for systems equipped with R-454B refrigerant
- If R-454B refrigerant is detected, the refrigerant detection system will stop compressor and/or heating operating and operate the blower to reduce concentrations in the conditioned space
- Once safe levels are reached the HVAC system will resume normal operation
- Multi-color LED for system status and as an aid in troubleshooting
  - Flashing LED codes for system status (Green/Blue) and diagnosing Sensor errors (Red)
- Alarm relay can trigger an external alarm if R-454B refrigerant is detected
- Zone relay opens all zone dampers (if part of a zoning system) if R-454B refrigerant is detected
- Power is disabled to non-communicating thermostats to prevent demand if R-454B refrigerant is detected
- On system start-up blower will run for five minutes and any thermostat demands are disabled
- Dimensions (H x W x D): 7-7/16 x 7-7/16 x 2-1/2 (189 x 189 x 127 mm)

NOTE - See Refrigerant Detection System (RDS) Components Table on page 12.

See the CK40 Indoor Coil Product Specifications bulletins for more information.

Refer to the Installation Instructions for additional information.

SPECIFICATIONS

		Model No.	SLP99DF070XV36B	SLP99DF090XV36C	SLP99DF090XV48C
Gas Heating Performance		[1] AFUE	97.5%	97.5%	97.5%
	Maximum	Input - Btuh	66,000	88,000	88,000
		Output - Btuh	64,000	84,000	85,000
		Temperature rise range - °F	50 - 80	60 - 90	50 - 80
		Gas Manifold Pressure (in. w.g.) Nat. Gas / LPG/Propane	3.5 / 10.0	3.5 / 10.0	3.5 / 10.0
	Minimum	Input - Btuh	23,000	31,000	31,000
		Output - Btuh	22,000	30,000	30,000
		Temperature rise range - °F	35 - 65	35 - 65	35 - 65
		Gas Manifold Pressure (in. w.g.) Nat. Gas / LPG/Propane	0.5 / 1.5	0.5 / 1.5	0.5 / 1.5
		High static - in. w.g.	0.8	0.8	0.8
Connections in.		Intake / [2] Exhaust Pipe (PVC)	2 / 2	2 / 2	2 / 2
		Gas pipe size IPS	1/2	1/2	1/2
		Condensate Drain Trap (PVC pipe) - i.d.	3/4	3/4	3/4
		with furnished 90° street elbow	3/4 slip x 3/4 Mipt	3/4 slip x 3/4 Mipt	3/4 slip x 3/4 Mipt
		with field supplied (PVC coupling) - o.d.	3/4 slip x 3/4 MPT	3/4 slip x 3/4 MPT	3/4 slip x 3/4 MPT
Indoor Blower		Wheel nominal diameter x width - in.	10 x 9	10 x 9	11 x 11
		Motor output - hp	1/2	1/2	3/4
		Tons of add-on cooling	2 - 3	2 - 3	3 - 4
		Air Volume Range - cfm	410 - 1365	465 - 1385	545 - 1745
Electrical Data		Voltage (Maximum Amps)	120 volts - 60 Hertz - 1 phase		
		Blower motor full load amps	7.7	7.7	10.1
		Maximum overcurrent protection	15	15	15
Shipping Data		lbs. - 1 package	141	156	166

NOTE - Filters and provisions for mounting are not furnished and must be field provided.

[1] Annual Fuel Utilization Efficiency based on DOE test procedures and according to FTC labeling regulations. Isolated combustion system rating for non-weatherized furnaces.

[2] 2 in. Rubber Flue Coupling is furnished for exhaust pipe connection to unit.

SPECIFICATIONS

		Model No.	SLP99DF090XV60C	SLP99DF110XV60C
Gas Heating Performance		[1] AFUE	97.5%	97.5%
	Maximum	Input - Btuh	88,000	110,000
		Output - Btuh	85,000	107,000
		Temperature rise range - °F	50 - 80	50 - 80
		Gas Manifold Pressure (in. w.g.) Nat. Gas / LPG/Propane	3.5 / 10.0	3.5 / 10.0
	Minimum	Input - Btuh	31,000	39,000
		Output - Btuh	30,000	38,000
		Temperature rise range - °F	35 - 65	35 - 65
		Gas Manifold Pressure (in. w.g.) Nat. Gas / LPG/Propane	0.5 / 1.5	0.5 / 1.5
		High static - in. w.g.	0.8	0.8
Connections in.		Intake / [2] Exhaust Pipe (PVC)	2 / 2	2 / 2
		Gas pipe size IPS	1/2	1/2
		Condensate Drain Trap (PVC pipe) - i.d.	3/4	3/4
		with furnished 90° street elbow	3/4 slip x 3/4 Mipt	3/4 slip x 3/4 Mipt
		with field supplied (PVC coupling) - o.d.	3/4 slip x 3/4 MPT	3/4 slip x 3/4 MPT
Indoor Blower		Wheel nominal diameter x width - in.	11 x 11	11 x 11
		Motor output - hp	1	1
		Tons of add-on cooling	3.5 - 5	3.5 - 5
		Air Volume Range - cfm	467 - 2130	575 - 2180
Electrical Data		Voltage (Maximum Amps)	120 volts - 60 Hertz - 1 phase	
		Blower motor full load amps	12.8	12.8
		Maximum overcurrent protection	20	20
Shipping Data		lbs. - 1 package	166	175

NOTE - Filters and provisions for mounting are not furnished and must be field provided.

[1] Annual Fuel Utilization Efficiency based on DOE test procedures and according to FTC labeling regulations. Isolated combustion system rating for non-weatherized furnaces.

[2] 2 in. Rubber Flue Coupling is furnished for exhaust pipe connection to unit.

OPTIONAL ACCESSORIES - ORDER SEPARATELY

NOTE - FURNACES CANNOT BE TWINNED!

			"B" Width Models	"C" Width Models
CABINET ACCESSORIES				
Downflow Combustible Flooring Base			**11M60**	**11M61**
High Performance Economizer (Commercial Only)			**10U53**	**10U53**
CONDENSATE DRAIN KITS				
Condensate Drain Heat Cable		6 ft.	**26K68**	**26K68**
		24 ft.	**26K69**	**26K69**
Crawl Space Vent Drain Kit		US	**51W18**	**51W18**
		Canada	**15Z70**	**15Z70**
CONTROLS				
S40 Smart Wi-Fi Thermostat			**22V24**	**22V24**
[1] Remote Outdoor Temperature Sensor			**X2658**	**X2658**
Transformer (75VA)			**27J32**	**27J32**
DOWNFLOW FILTER KITS				
Downflow Air Filter and Rack Kit			**51W07**	**51W08**
		No. and Size of filter - in.	(2) 16 x 20 x 1	(2) 16 x 20 x 1
TERMINATION KITS				
Direct Vent Applications Only. See Installation Instructions for specific venting information.				
Direct Vent	Concentric	US - 2 in.	**71M80**	**69M29**
		3 in.	**- - -**	**60L46**
		Canada - 2 in.	**44W92**	**44W92**
		3 in.	**- - -**	**44W93**
	Flush-Mount	US - 2, 2-1/2 or 3 in.	**51W11**	**51W11**
		Canada - 2, 2-1/2 or 3 in.	**51W12**	**51W12**
	Wall - Close Couple	US - 2 in.	**22G44**	**- - -**
		3 in.	**44J40**	**44J40**
	Wall - Close Couple WTK	Canada - 2 in.	**30G28**	**- - -**
		3 in.	**81J20**	**81J20**
	Roof Termination Flashing Kit (no vent pipe - 2 flashings)	2 in.	**15F75**	**15F75**
		3 in.	**44J41**	**44J41**
VENTING				
[2] Left Side Vent Kit		2 or 3 in.	**87W73**	**87W73**

[1] Remote Outdoor Temperature Sensor is used with conventional (non-Lennox® Communicating) outdoor units (sensor is furnished with Lennox® Communicating outdoor units). Allows the thermostat to display outdoor temperature. Required in dual-fuel and EDA applications.

[2] NOTE - The curved exhaust pipe furnished with the Left Side Vent Kit counts as one additional 2 in. diameter 90° elbow. When using 3 in. diameter pipe, the furnished curved exhaust pipe and field provided fittings to transition from 2 in. to 3 in. count as 20 feet of equivalent pipe on all units.

NOTE - Termination Kits (**44W92**, **44W93**, **30G28**, **51W12**, **81J20**) and Crawl Space Vent Drain Kit (**15Z70**) are certified to ULC S636 standard for use in Canada only.

GAS HEAT ACCESSORIES

Input	High Altitude Pressure Switch Kit	Natural Gas to LPG/Propane Kit	LPG/Propane to Natural Gas Kit	Muffler (US Only)
	7501 - 10,000 ft.	0 - 7500 ft.	0 - 7500 ft.	
070	14T67	65W77	70W87	15Y66 (2-inch)
090	14T67	65W77	70W87	15Y66 (2-inch)
110	14T67	65W77	70W87	[1] 15Y66 (2-inch) 16A56 (3-inch)

[1] Two-inch diameter muffler (**15Y66**) is optional for 110 input model with a maximum vent pipe length of up to 29 ft.
Three-inch diameter muffler (**16A56**) is optional for 110 input model with a minimum vent pipe length of 30 ft.

REFRIGERANT DETECTION SYSTEM (RDS) COMPONENTS

Description		Order No.
Refrigerant Detection System (RDS) Coil Sensor Kit		26Z69
Refrigerant Detection System (RDS) Blower Control Board	Any Lennox® Communicating Furnace or any Non-Communicating 24V Furnace (Universal)	27A03
	Any Non-Communicating 24V Furnace	27A02

NOTE - Communicating Blower Control Board and Sensor can be used universally with Lennox® communicating furnace or any non-communicating 24 volt furnace.
Non-Communicating Blower Control Board and Sensor can be used with any non-communicating 24 volt furnace.

OUTDOOR TERMINATION KIT USAGE

Input Size	Vent Pipe Diameter (in.)	Standard Terminations				Concentric Terminations		
		Flush Mount Kit	Wall Kit		Field Fabricated Exhaust Accelerator Size Required	Concentric Kit		
			2 inch	3 inch		1-1/2 inch	2 inch	3 inch
		51W11 (US) [5] 51W12 (CA)	22G44 (US) [5] 30G28 (CA)	44J40 (US) [5] 81J20 (CA)		71M80 (US) [5] 44W92 (CA)	69M29 (US) [5] 44W92 (CA)	60L46 (US) [5] 44W93 (CA)
070	[1] 1-1/2	[4] YES	YES	[2] YES	1-1/2 in.	[3] YES		
	2	[4] YES	YES	[2] YES	1-1/2 in.	[3] YES	- - -	- - -
	2-1/2	[4] YES	YES	[2] YES	1-1/2 in.	[3] YES	- - -	- - -
	3	[4] YES	YES	[2] YES	1-1/2 in.	[3] YES	- - -	- - -
090	2	[4] YES	- - -	YES	2 in.	- - -	YES	YES
	2-1/2	[4] YES	- - -	YES	2 in.	- - -	YES	YES
	3	[4] YES	- - -	YES	2 in.	- - -	YES	YES
110	2	YES	- - -	YES	2 in.	- - -	YES	YES
	2-1/2	YES	- - -	YES	2 in.	- - -	YES	YES
	3	YES	- - -	YES	2 in.	- - -	YES	YES

NOTE - Standard Terminations do not include any vent pipe or elbows external to the structure.
Any vent pipe or elbows external to the structure must be included in total vent length calculations. See Vent Length Tables.

NOTE - When using 1-1/2 inch piping with Concentric Kit or Flush Mount Kit pipe must be transitioned to 2 inch pipe.

[1] Requires 2 inch to 1-1/2 inch reducer, must be field provided.

[2] Requires field provided 1-1/2 in. outdoor exhaust accelerator.

[3] Concentric Kits **71M80** and **44W92** include 1-1/2 in. outdoor exhaust accelerator, required when used with 070 input models. Accelerator is not used with 090 and 110 input models.

[4] Flush Mount Kit **51W11** and **51W12** includes 1-1/2 in. outdoor exhaust accelerator, required when used with 070 and 090 input models. Accelerator is not used with 110 input models.

[5] Termination Kits **30G28**, **44W92**, **44W93**, **51W12** and **81J20** are certified to ULC S636 standard for use in Canada only.

VENT LENGTHS - UNINSULATED EXHAUST PIPE IN UNCONDITIONED SPACE

[1] Winter Design Temperatures	Vent Pipe Diameter	Unit Input Size					
		070		090		110	
		Maximum Un-Insulated Exhaust Vent Length (ft.)					
		PVC	PolyPro InnoFlue	PVC	PolyPro InnoFlue	PVC	PolyPro InnoFlue
32 to 21°F	1-1/2 in.	N/A	N/A	N/A	N/A	N/A	N/A
	2 in.	11	9	14	12	18	15
	2-1/2 in.	7	N/A	10	N/A	12	N/A
	3 in.	N/A	N/A	6	6	8	8
20 to 1°F	1-1/2 in.	N/A	N/A	N/A	N/A	N/A	N/A
	2 in.	N/A	N/A	6	4	8	6
	2-1/2 in.	N/A	N/A	N/A	N/A	N/A	N/A
	3 in.	N/A	N/A	N/A	N/A	N/A	N/A
0 to –20°F	1-1/2 in.	N/A	N/A	N/A	N/A	N/A	N/A
	2 in.	N/A	N/A	N/A	N/A	N/A	N/A
	2-1/2 in.	N/A	N/A	N/A	N/A	N/A	N/A
	3 in.	N/A	N/A	N/A	N/A	N/A	N/A

NOTE - Lengths shown are equivalent pipe lengths.
Concentric terminations are equivalent to 5 ft. of straight pipe and should be included when measuring total pipe length.
Elbows are equivalent to 5 ft. of straight pipe and should be included when measuring total pipe length.

[1] Refer to 99% Minimum Design Temperature table provided in the current edition of ASHRAE Handbook-Fundamentals.

PolyPro® poly-propylene vent pipe is a registered trademark of DuraVent®.

Innoflue® is a registered trademark of Centrotherm Eco Systems.

VENT LENGTHS

STANDARD TERMINATION AT ELEVATION 0 - 4500 ft.

	Pipe Size	1-1/2 in.			2 in.			2-1/2 in.			3 in.		
	Input	070	090	110	070	090	110	070	090	110	070	090	110
No. of 90 ELL	1	15	N/A	N/A	91	69	N/A	140	93	43	162	143	118
	2	10	N/A	N/A	86	64	N/A	135	88	38	157	138	113
	3	N/A	N/A	N/A	81	59	N/A	130	83	33	152	133	108
	4	N/A	N/A	N/A	76	54	N/A	125	78	28	147	128	103
	5	N/A	N/A	N/A	71	49	N/A	120	73	23	142	123	98
	6	N/A	N/A	N/A	66	44	N/A	115	68	18	137	118	93
	7	N/A	N/A	N/A	61	39	N/A	110	63	13	132	113	88
	8	N/A	N/A	N/A	56	34	N/A	105	58	N/A	127	108	83
	9	N/A	N/A	N/A	51	29	N/A	100	53	N/A	122	103	78
	10	N/A	N/A	N/A	46	24	N/A	95	48	N/A	117	98	73

STANDARD TERMINATION AT ELEVATION 4501 - 7500 ft.

	Pipe Size	1-1/2 in.			2 in.			2-1/2 in.			3 in.		
	Input	070	090	110	070	090	110	070	090	110	070	090	110
No. of 90 ELL	1	13	N/A	N/A	66	69	N/A	115	93	43	137	143	118
	2	8	N/A	N/A	61	64	N/A	110	88	38	132	138	113
	3	N/A	N/A	N/A	56	59	N/A	105	83	33	127	133	108
	4	N/A	N/A	N/A	51	54	N/A	100	78	28	122	128	103
	5	N/A	N/A	N/A	46	49	N/A	95	73	23	117	123	98
	6	N/A	N/A	N/A	41	44	N/A	90	68	18	112	118	93
	7	N/A	N/A	N/A	36	39	N/A	85	63	13	107	113	88
	8	N/A	N/A	N/A	31	34	N/A	80	58	N/A	102	108	83
	9	N/A	N/A	N/A	26	29	N/A	75	53	N/A	97	103	78
	10	N/A	N/A	N/A	21	24	N/A	70	48	N/A	92	98	73

STANDARD TERMINATION AT ELEVATION 7501 - 10,000 ft.

	Pipe Size	1-1/2 in.			2 in.			2-1/2 in.			3 in.		
	Input	070	090	110	070	090	110	070	090	110	070	090	110
No. of 90 ELL	1	N/A	N/A	N/A	41	44	N/A	90	68	N/A	112	118	93
	2	N/A	N/A	N/A	36	39	N/A	85	63	N/A	107	113	88
	3	N/A	N/A	N/A	31	34	N/A	80	58	N/A	102	108	83
	4	N/A	N/A	N/A	26	29	N/A	75	53	N/A	97	103	78
	5	N/A	N/A	N/A	21	24	N/A	70	48	N/A	92	98	73
	6	N/A	N/A	N/A	16	19	N/A	65	43	N/A	87	93	68
	7	N/A	N/A	N/A	11	14	N/A	60	38	N/A	82	88	63
	8	N/A	N/A	N/A	N/A	N/A	N/A	55	33	N/A	77	83	58
	9	N/A	N/A	N/A	N/A	N/A	N/A	50	28	N/A	72	78	53
	10	N/A	N/A	N/A	N/A	N/A	N/A	45	23	N/A	67	73	48

VENT LENGTHS

CONCENTRIC TERMINATION ELEVATION 0 - 4500 ft.

	Pipe Size	1-1/2 in.			2 in.			2-1/2 in.			3 in.		
	Input	070	090	110	070	090	110	070	090	110	070	090	110
No. of 90 ELL	1	10	N/A	N/A	83	67	N/A	130	89	39	146	139	114
	2	N/A	N/A	N/A	78	62	N/A	125	84	34	141	134	109
	3	N/A	N/A	N/A	73	57	N/A	120	79	29	136	129	104
	4	N/A	N/A	N/A	68	52	N/A	115	74	24	131	124	99
	5	N/A	N/A	N/A	63	47	N/A	110	69	19	126	119	94
	6	N/A	N/A	N/A	58	42	N/A	105	64	14	121	114	89
	7	N/A	N/A	N/A	53	37	N/A	100	59	N/A	116	109	84
	8	N/A	N/A	N/A	48	32	N/A	95	54	N/A	111	104	79
	9	N/A	N/A	N/A	43	27	N/A	90	49	N/A	106	99	74
	10	N/A	N/A	N/A	38	22	N/A	85	44	N/A	101	94	69

CONCENTRIC TERMINATION ELEVATION 4501 - 7500 ft.

	Pipe Size	1-1/2 in.			2 in.			2-1/2 in.			3 in.		
	Input	070	090	110	070	090	110	070	090	110	070	090	110
No. of 90 ELL	1	N/A	N/A	N/A	58	67	N/A	105	89	39	121	114	114
	2	N/A	N/A	N/A	53	62	N/A	100	84	34	116	109	109
	3	N/A	N/A	N/A	48	57	N/A	95	79	29	111	104	104
	4	N/A	N/A	N/A	43	52	N/A	90	74	24	106	99	99
	5	N/A	N/A	N/A	38	47	N/A	85	69	19	101	94	94
	6	N/A	N/A	N/A	33	42	N/A	80	64	14	96	89	89
	7	N/A	N/A	N/A	28	37	N/A	75	59	N/A	91	84	84
	8	N/A	N/A	N/A	23	32	N/A	70	54	N/A	86	79	79
	9	N/A	N/A	N/A	18	27	N/A	65	49	N/A	81	74	74
	10	N/A	N/A	N/A	13	22	N/A	60	44	N/A	76	69	69

CONCENTRIC TERMINATION ELEVATION 7501 - 10,000 ft.

	Pipe Size	1-1/2 in.			2 in.			2-1/2 in.			3 in.		
	Input	070	090	110	070	090	110	070	090	110	070	090	110
No. of 90 ELL	1	N/A	N/A	N/A	33	42	N/A	80	64	N/A	96	114	89
	2	N/A	N/A	N/A	28	37	N/A	75	59	N/A	91	109	84
	3	N/A	N/A	N/A	23	32	N/A	70	54	N/A	86	104	79
	4	N/A	N/A	N/A	18	27	N/A	65	49	N/A	81	99	74
	5	N/A	N/A	N/A	13	22	N/A	60	44	N/A	76	94	69
	6	N/A	N/A	N/A	N/A	17	N/A	55	39	N/A	71	89	64
	7	N/A	N/A	N/A	N/A	12	N/A	50	34	N/A	66	84	59
	8	N/A	N/A	N/A	N/A	N/A	N/A	45	29	N/A	61	79	54
	9	N/A	N/A	N/A	N/A	N/A	N/A	40	24	N/A	56	74	49
	10	N/A	N/A	N/A	N/A	N/A	N/A	35	19	N/A	51	69	44

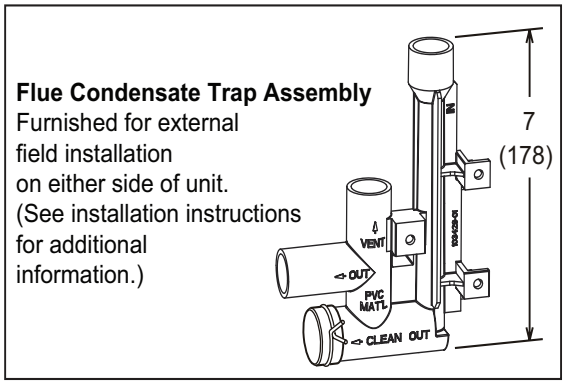

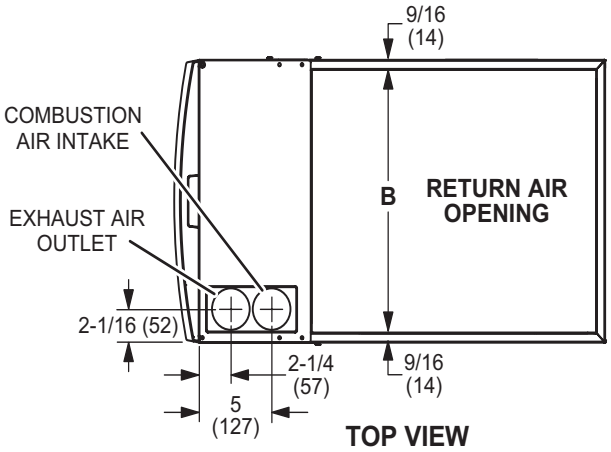

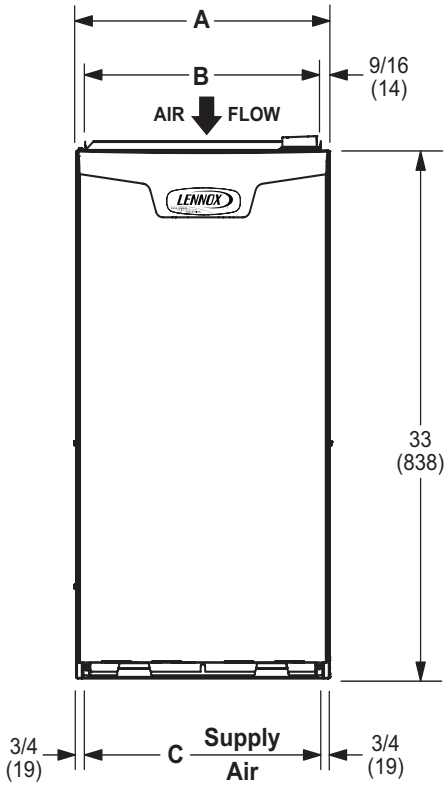

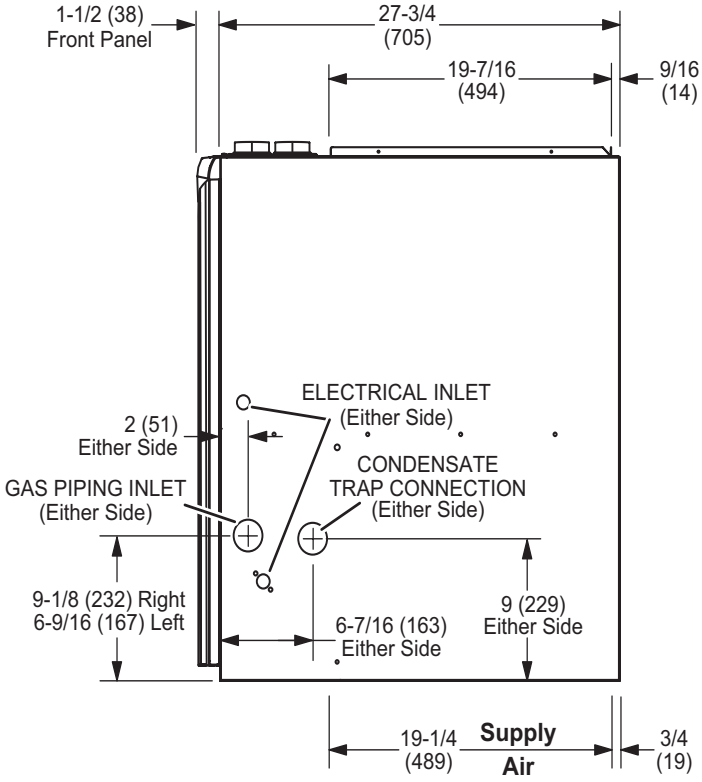

Model No.	A		B		C	
	in.	mm	in.	mm	in.	mm
SLP99DF070XV36B	17-1/2	446	16-3/8	416	16	406
SLP99DF090XV36C SLP99DF090XV48C SLP99DF090XV60C SLP99DF110XV60C	21	533	19-7/8	505	19-1/2	495

DOWNFLOW FILTER CABINET

"B AND "C" WIDTH FURNACES
(Two Filters)

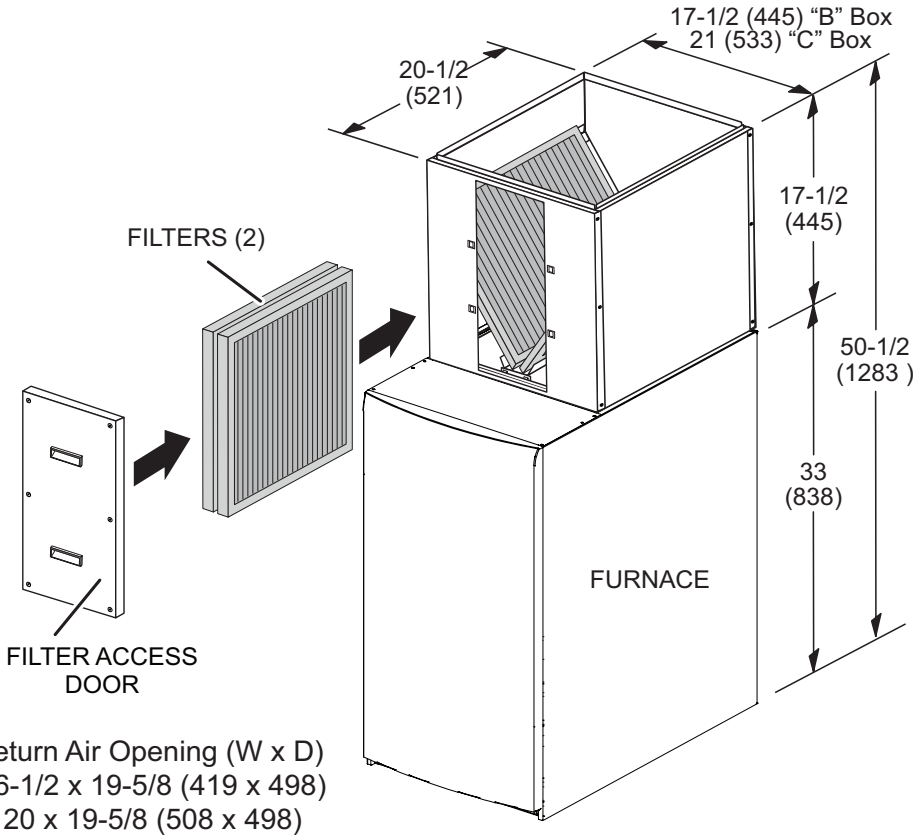

NOTE: Return Air Opening (W x D)
"B" Box 16-1/2 x 19-5/8 (419 x 498)
"C" Box 20 x 19-5/8 (508 x 498)

INSTALLATION CLEARANCES

Sides	[1] 0 inches (0 mm)
Rear	0 inches (0 mm)
Top/Plenum	1 inch (25 mm)
Front	0 inches (0 mm)
Front (service/alcove)	24 inches (610 mm)
Floor	[2] Combustible

NOTE - Air for combustion must conform to the methods outlined in the National Fuel Gas Code (NFPA 54/ANSI-Z223.1) or the National Standard of Canada CAN/CSA-B149.1 "Natural Gas and Propane Installation Code".

NOTE - In the U.S. flue sizing must conform to the methods outlined in the current National Fuel Gas Code (NFPA 54/ANSI-Z223.1) or applicable provisions of local building codes. In Canada flue sizing must conform to the methods outlined in National Standard of Canada CAN/CSA-B149.1.

[1] Allow proper clearances to accommodate condensate trap and vent pipe installation.

[2] Clearance for installation on combustible floor if Optional Downflow Combustible Flooring Base is installed between furnace and combustible floor. Not required in add-on cooling applications if installed in accordance with local codes or National Fuel Gas Code ANSI-Z223.1 or CAN/CGA−149.1,.2. Do not install the furnace directly on carpeting, tile, or other combustible materials other than wood flooring.

DIMENSIONS - OPTIONAL ACCESSORIES

DOWNFLOW COMBUSTIBLE FLOORING BASE

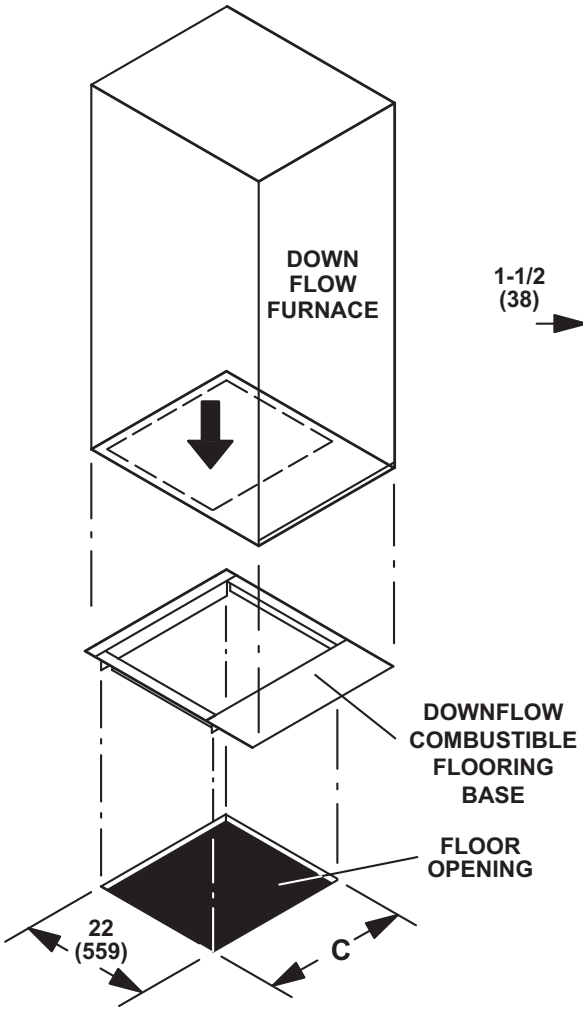

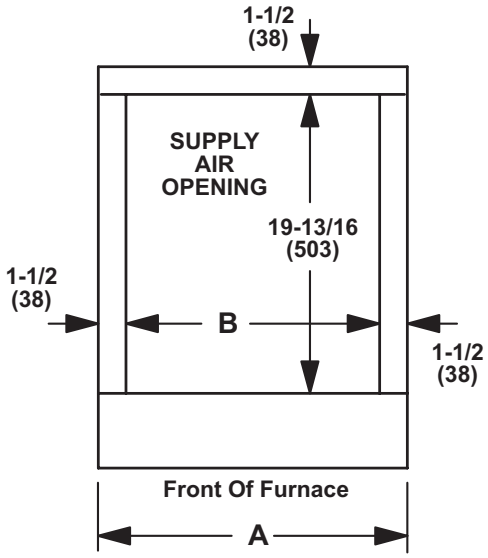

TOP VIEW

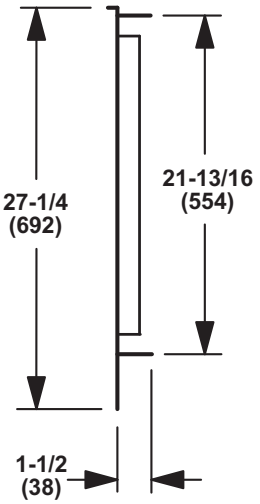

SIDE VIEW

Cabinet Width	Catalog Number	A		B		C	
		in.	mm	in.	mm	in.	mm
B	**11M60**	19-9/16	497	16-9/16	421	18-3/4	476
C	**11M61**	23-1/16	586	20-1/16	510	22-1/4	565

DIMENSIONS - FURNACE/COIL COMBINED DIMENSIONS

Model		Coil/Furnace Width		Coil Height		Overall Height	
CK40DT	**CRX35**	in.	mm	in.	mm	in.	mm
CK40DT-24A	CRX35-24A	14-1/2	368	18	457	51	1295
CK40DT-24B	CRX35-24B	17-1/2	445	18	457	51	1295
CK40DT-30/36B	CRX35-30/36B	17-1/2	445	23-1/2	597	56-1/2	1435
CK40DT-30/36C	CRX35-30/36C	21	533	23-1/2	597	56-1/2	1435
CK40DT-42B	CRX35-42B	17-1/2	445	23-1/2	597	56-1/2	1435
CK40DT-48C	CRX35-48C	21	533	27-1/2	699	60-1/2	1537
CK40CT-50/60C	CRX35-50/60C	21	533	27-1/2	699	60-1/2	1537

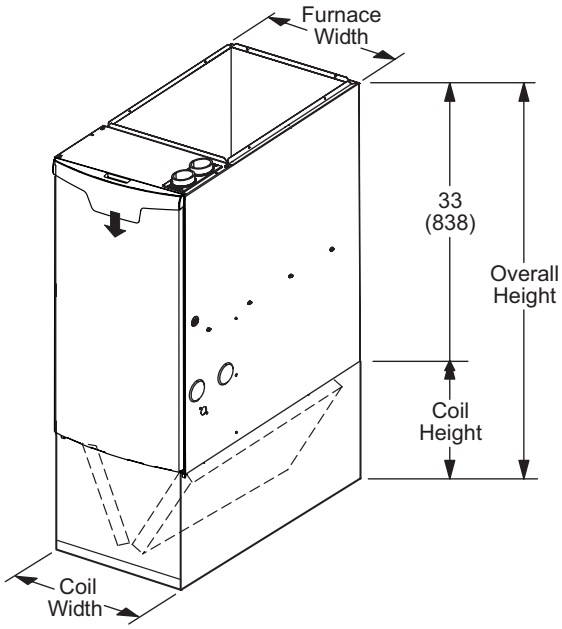

FLUSH-MOUNT VENT TERMINATION KIT 51W11 (US) or 51W12 (CANADA)

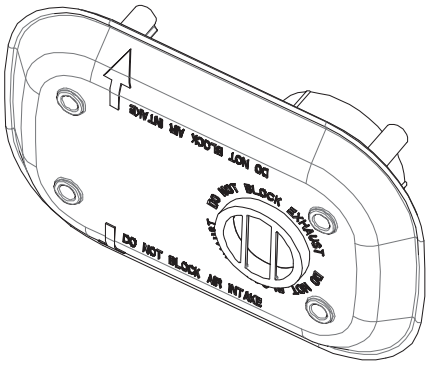

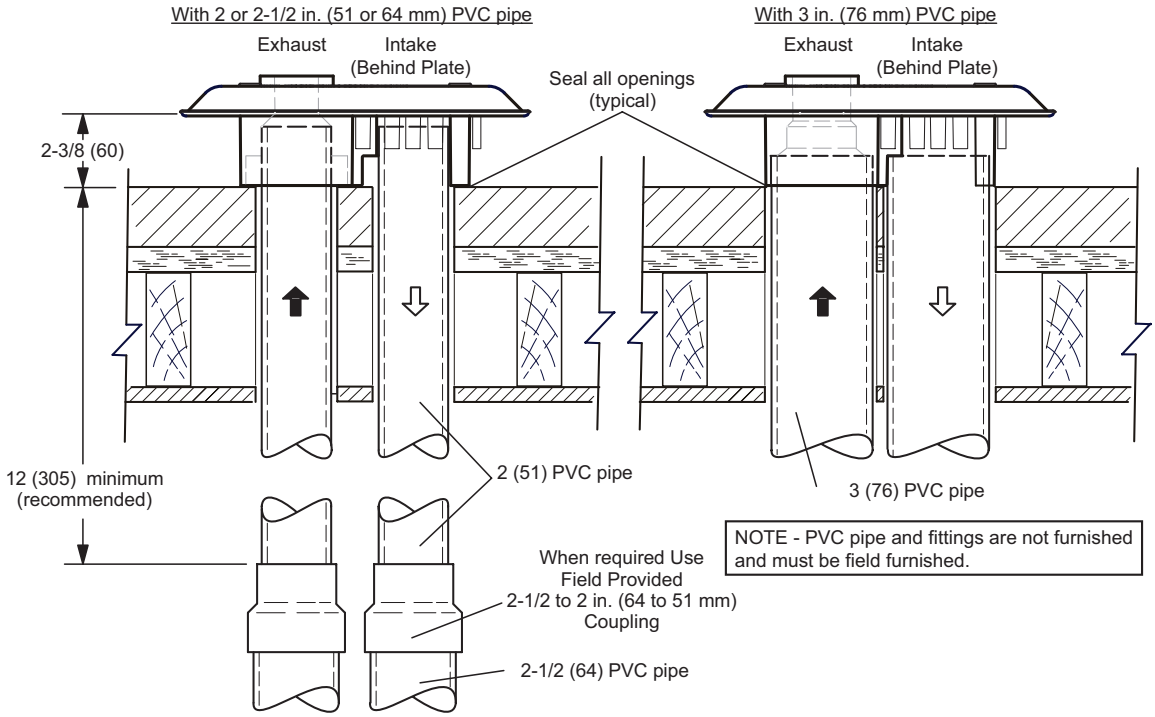

NOTE - PVC pipe and fittings are not furnished and must be field furnished.

MUFFLERS
15Y66 - 2-inch
16A56 - 3-inch

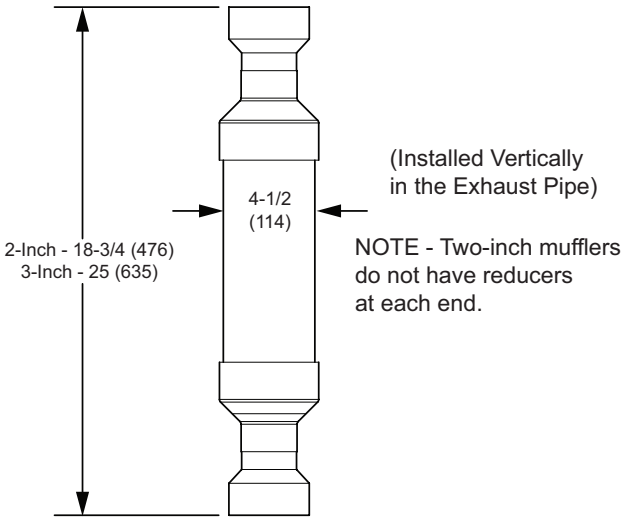

(Installed Vertically in the Exhaust Pipe)

NOTE - Two-inch mufflers do not have reducers at each end.

CONCENTRIC WALL TERMINATION APPLICATIONS

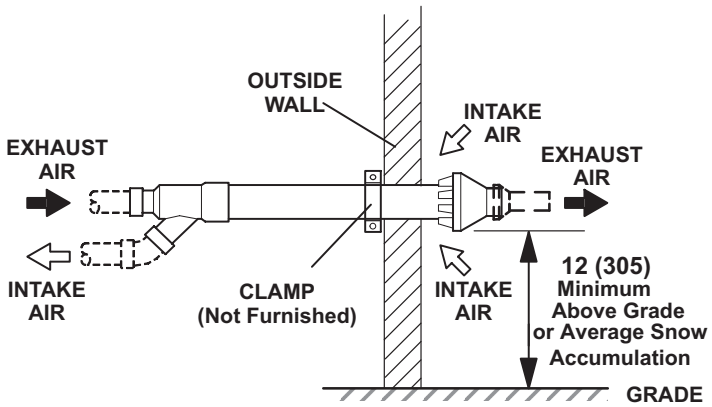

CONCENTRIC ROOF TERMINATION APPLICATIONS

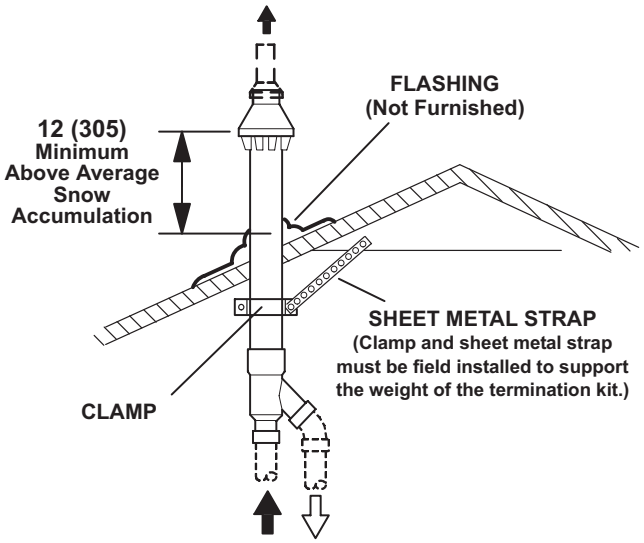

71M80 / 69M29 / 44W92 − 2 inch kits
60L46 / 44W93 − 3 inch kits
See Installation Instructions for additional information.

Note - Field provided reducer may be required to adapt different vent pipe sizes to termination.

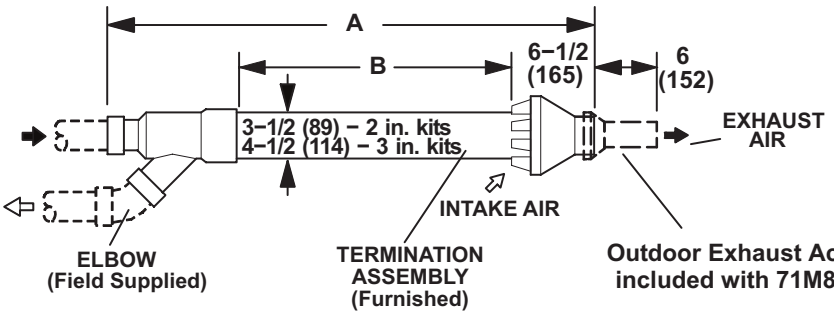

Cat. No.	A		B	
	in.	mm	in.	mm
71M80 69M29	33−3/8	848	16−3/4	425
44W92 (Canada)	29	737	15−1/2	394
60L46	38−7/8	987	21−3/16	538
44W93 (Canada)	36−1/8	918	19−1/2	495

NOTE − Typical illustration for dimensions only. Design may vary depending on kit ordered.

WALL TERMINATION KITS (CLOSE-COUPLE)
EXTENDED VENT FOR GRADE CLEARANCE
2 inch (51 mm) 22G44 (US)
3 inch (76 mm) 44J40 (US)
See Installation Instructions for additional information.

Note - Field provided reducer may be required to adapt different vent pipe sizes to termination.

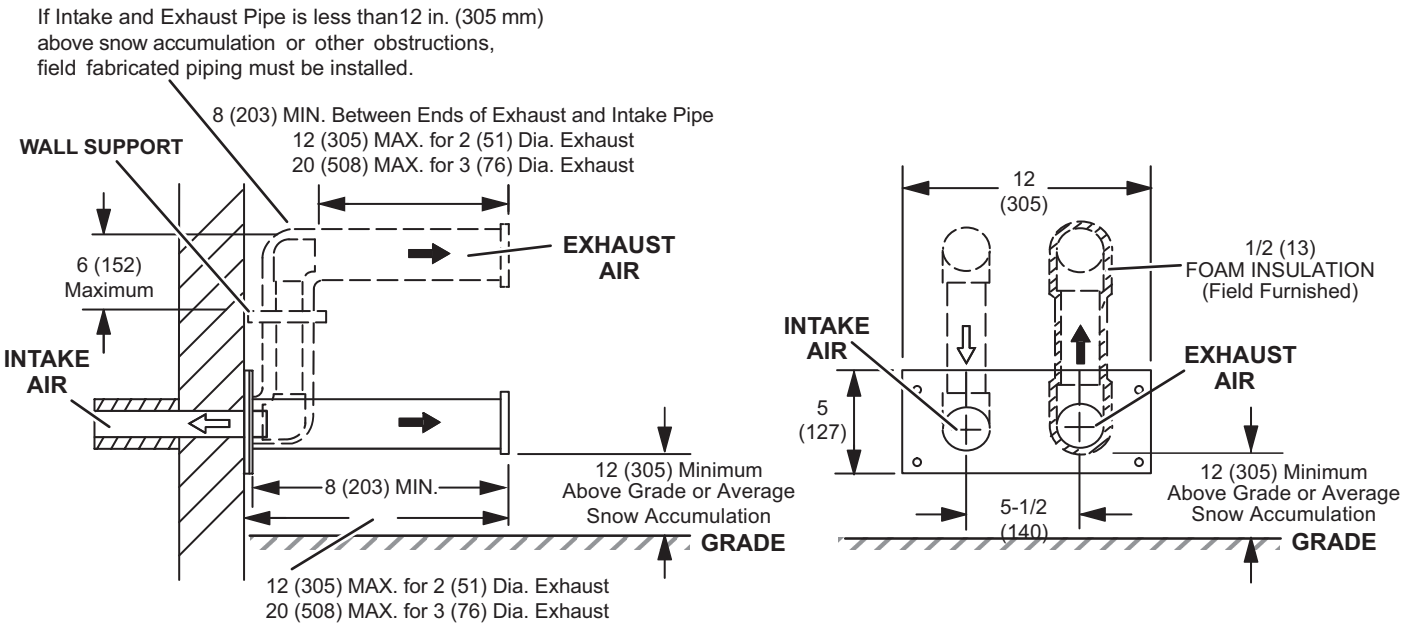

WALL TERMINATION KITS (CLOSE-COUPLE)
EXTENDED VENT FOR GRADE CLEARANCE
2 inch (51 mm) 30G28 (WTK Canada)
3 inch (76 mm) 81J20 (WTK Canada)
See Installation Instructions for additional information.

Note - Field provided reducer may be required to adapt different vent pipe sizes to termination.

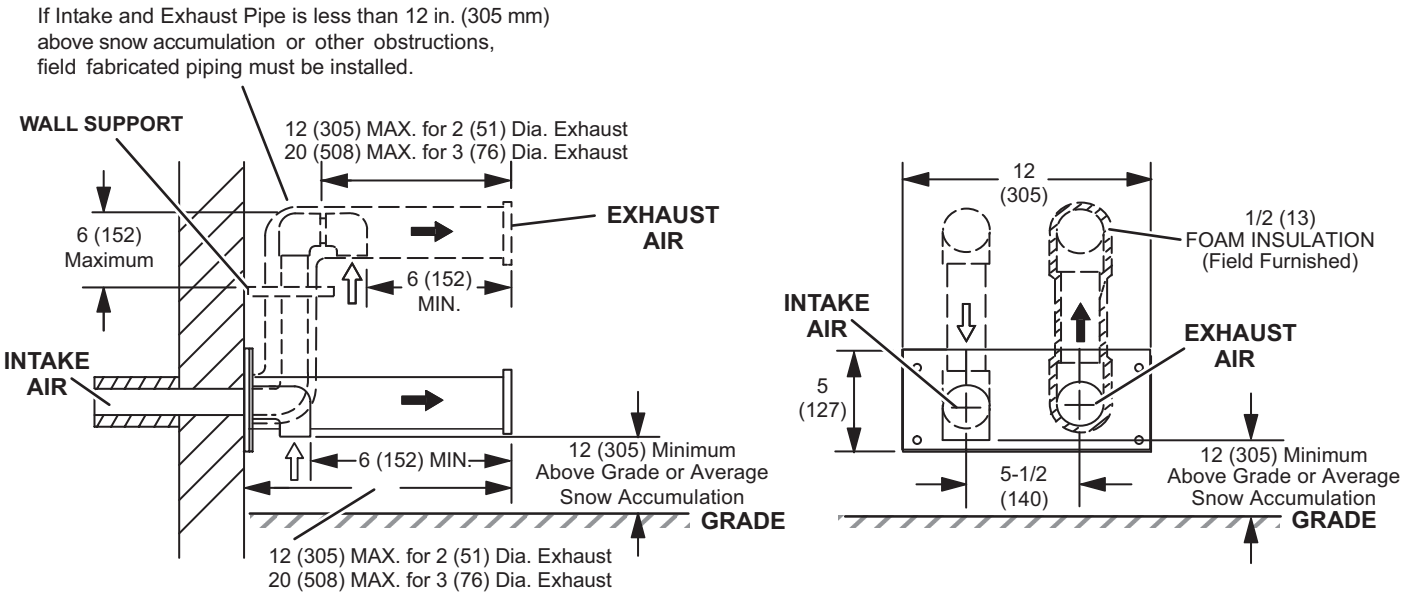

BLOWER DATA

SLP99DF070XV36B BLOWER PERFORMANCE (less filter)

HEATING BLOWER PERFORMANCE - 0 through 0.8 in. w.g. External Static Pressure Range

Heating Adjust CFM Selections	Heating Input Range and Blower Volume - CFM							
	35%	40%	50%	60%	70%	80%	90%	100%
Increase (+15%) Heat CFM	495	543	639	735	830	926	1022	1118
Increase (+7.5%) Heat CFM	473	516	604	691	778	866	953	1041
Default Heat CFM	450	489	568	647	726	805	884	963
Decrease (-7.5%) Heat CFM	430	467	540	614	687	761	834	908
Decrease (-15%) Heat CFM	410	444	512	580	649	717	785	853

COOLING BLOWER PERFORMANCE - 0 through 1.0 in. w.g. External Static Pressure Range

Cooling Adjust CFM Selections	Blower Speed Selections							
	First Stage Cool Speed - cfm				Second Stage Cool Speed - cfm			
	Low	Medium-Low	Medium High	High (Default)	Low	Medium-Low	Medium High	High (Default)
Increase (+10%) Cool CFM	625	785	890	995	910	1075	1230	1365
Default Cool CFM	575	710	830	890	845	960	1125	1265
Decrease (-10%) Cool CFM	520	615	710	820	755	885	985	1150

The effect of static pressure is included in air volumes shown.
The following control configurations are available. See Installation Instructions for details and DIP switch settings.

Heat Modes Available (Heating Blower Performance Table):

Single-stage thermostat:
- 35%, 70%, 100% input (three-stage) with time delays in-between

Two-stage thermostat:
- Variable Rate Capacity Mode - furnace automatically adjusts firing rate based on first- and second-stage cycle times.
- W1 demand at 70% input, W2 demand at 100% input. No delay between stages.

Cool Mode Available (Cooling Blower Performance Table):

First stage COOL (two-stage air conditioning units only) is approximately 70% of the same second stage COOL speed position.
Continuous Fan speeds are approximately 28% and 38% (DIP switch selectable) of the same second-stage COOL speed position minimum 250 cfm.

Lennox® Smart Zoning System Applications - Minimum blower speed is 250 cfm.

SLP99DF070XV36B BLOWER MOTOR WATTS - COOLING

Blower Speed Options	Motor Watts @ Various External Static Pressures - in. wg.																			
	First Stage									Second Stage										
	0	0.1	0.2	0.3	0.4	0.5	0.6	0.7	0.8	0	0.1	0.2	0.3	0.4	0.5	0.6	0.7	0.8	0.9	1.0
Increase (+10%) Cool CFM																				
Low	20	37	57	71	90	108	128	142	162	67	90	110	136	159	184	200	226	252	271	292
Medium-Low	36	59	77	96	125	145	166	187	203	113	136	164	188	223	256	276	309	332	354	367
Medium-High	59	82	104	132	151	178	199	222	244	185	199	239	270	297	331	356	393	411	430	441
High	83	107	135	158	185	213	247	258	286	279	292	323	359	387	417	445	475	500	515	509
Default Cool CFM																				
Low	18	29	51	66	83	98	111	127	143	48	66	84	118	141	164	185	203	226	243	260
Medium-Low	27	50	64	84	105	124	146	162	185	89	109	142	160	188	211	240	262	286	312	327
Medium-High	39	60	81	109	136	162	183	194	220	126	145	183	209	244	272	301	330	358	378	401
High	65	82	112	144	164	185	207	227	257	209	218	261	292	320	352	384	400	424	448	462
Decrease (-10%) Cool CFM																				
Low	11	28	39	57	74	89	102	116	137	36	55	74	91	120	137	160	183	198	213	233
Medium-Low	23	37	57	77	92	112	128	143	156	63	83	105	132	162	181	208	227	251	268	291
Medium-High	32	54	70	87	113	133	149	172	189	90	112	144	164	200	216	246	275	303	326	342
High	47	67	91	115	139	163	184	203	224	134	151	192	222	255	287	320	348	370	395	414

BLOWER DATA

SLP99DF090XV36C BLOWER PERFORMANCE (less filter)

HEATING BLOWER PERFORMANCE - 0 through 0.8 in. w.g. External Static Pressure Range

Heating Adjust CFM Selections	Heating Input Range and Blower Volume - CFM							
	35%	40%	50%	60%	70%	80%	90%	100%
Increase (+15%) Heat CFM	710	756	848	940	1033	1125	1217	1309
Increase (+7.5%) Heat CFM	670	713	799	885	971	1057	1143	1230
Default Heat CFM	629	669	749	829	910	990	1070	1150
Decrease (-7.5%) Heat CFM	559	599	681	763	845	927	1009	1091
Decrease (-15%) Heat CFM	488	530	614	697	781	865	948	1032

COOLING BLOWER PERFORMANCE - 0 through 1.0 in. w.g. External Static Pressure Range

Cooling Adjust CFM Selections	Blower Speed Selections							
	First Stage Cool Speed - cfm				Second Stage Cool Speed - cfm			
	Low	Medium-Low	Medium High	High (Default)	Low	Medium-Low	Medium High	High (Default)
Increase (+10%) Cool CFM	610	770	900	1035	920	1080	1215	1385
Default Cool CFM	545	690	805	920	835	1000	1135	1255
Decrease (-10%) Cool CFM	465	620	720	810	750	890	1025	1145

The effect of static pressure is included in air volumes shown.
The following control configurations are available. See Installation Instructions for details and DIP switch settings.

Heat Modes Available (Heating Blower Performance Table):

Single-stage thermostat:
- 35%, 70%, 100% input (three-stage) with time delays in-between

Two-stage thermostat:
- Variable Rate Capacity Mode - furnace automatically adjusts firing rate based on first- and second-stage cycle times.
- W1 demand at 70% input, W2 demand at 100% input. No delay between stages.

Cool Mode Available (Cooling Blower Performance Table):

First stage COOL (two-stage air conditioning units only) is approximately 70% of the same second stage COOL speed position.
Continuous Fan speeds are approximately 28% and 38% (DIP switch selectable) of the same second-stage COOL speed position minimum 250 cfm.

Lennox® Smart Zoning System Applications - Minimum blower speed is 250 cfm.

SLP99DF090XV36C BLOWER MOTOR WATTS - COOLING

Blower Speed Options	Motor Watts @ Various External Static Pressures - in. wg.																			
	First Stage									Second Stage										
	0	0.1	0.2	0.3	0.4	0.5	0.6	0.7	0.8	0	0.1	0.2	0.3	0.4	0.5	0.6	0.7	0.8	0.9	1.0
Increase (+10%) Cool CFM																				
Low	21	33	51	67	82	94	111	124	139	54	77	102	117	151	173	191	216	239	262	283
Medium-Low	40	60	80	92	114	130	150	170	190	111	130	152	183	209	231	256	278	296	324	338
Medium-High	59	80	103	126	152	173	194	220	234	160	180	216	240	261	293	318	339	374	392	419
High	76	102	121	160	178	208	229	251	283	223	247	268	319	350	384	411	456	460	497	511
Default Cool CFM																				
Low	16	29	41	59	72	84	98	112	123	46	69	84	106	132	142	170	194	211	232	248
Medium-Low	33	47	67	81	95	116	128	145	161	82	98	127	153	174	200	218	244	264	285	303
Medium-High	47	69	84	106	128	145	163	184	207	121	137	167	201	225	252	273	291	306	339	370
High	57	78	101	130	150	176	195	220	238	168	194	226	248	276	315	340	367	400	418	441
Decrease (-10%) Cool CFM																				
Low	10	24	34	47	59	73	86	96	109	37	57	74	88	102	121	140	161	172	193	212
Medium-Low	23	36	56	69	82	99	113	129	143	50	70	89	111	137	158	182	197	221	234	259
Medium-High	37	52	71	88	102	120	139	153	170	82	104	124	154	181	207	227	253	275	294	316
High	46	68	83	106	125	137	167	182	204	136	158	178	210	242	255	282	299	327	357	374

BLOWER DATA

SLP99DF090XV48C BLOWER PERFORMANCE (less filter)

HEATING BLOWER PERFORMANCE - 0 through 0.8 in. w.g. External Static Pressure Range

Heating Adjust CFM Selections	Heating Input Range and Blower Volume - CFM							
	35%	40%	50%	60%	70%	80%	90%	100%
Increase (+15%) Heat CFM	723	790	925	1060	1195	1329	1464	1599
Increase (+7.5%) Heat CFM	690	752	878	1004	1129	1255	1381	1507
Default Heat CFM	656	714	831	948	1064	1181	1297	1414
Decrease (-7.5%) Heat CFM	601	654	761	867	974	1081	1188	1295
Decrease (-15%) Heat CFM	545	593	690	787	884	981	1078	1175

COOLING BLOWER PERFORMANCE - 0 through 1.0 in. w.g. External Static Pressure Range

Cooling Adjust CFM Selections	Blower Speed Selections							
	First Stage Cool Speed - cfm				Second Stage Cool Speed - cfm			
	Low	Medium-Low	Medium High	High (Default)	Low	Medium-Low	Medium High	High (Default)
Increase (+10%) Cool CFM	775	940	1100	1255	1120	1340	1535	1745
Default Cool CFM	690	875	975	1135	1000	1220	1425	1625
Decrease (-10%) Cool CFM	635	755	915	1025	920	1100	1270	1470

The effect of static pressure is included in air volumes shown.
The following control configurations are available. See Installation Instructions for details and DIP switch settings.

Heat Modes Available (Heating Blower Performance Table):

Single-stage thermostat:
- 35%, 70%, 100% input (three-stage) with time delays in-between

Two-stage thermostat:
- Variable Rate Capacity Mode - furnace automatically adjusts firing rate based on first- and second-stage cycle times.
- W1 demand at 70% input, W2 demand at 100% input. No delay between stages.

Cool Mode Available (Cooling Blower Performance Table):

First stage COOL (two-stage air conditioning units only) is approximately 70% of the same second stage COOL speed position.
Continuous Fan speeds are approximately 28% and 38% (DIP switch selectable) of the same second-stage COOL speed position minimum 250 cfm.

Lennox® Smart Zoning System Applications - Minimum blower speed is 380 cfm.

SLP99DF090XV48C BLOWER MOTOR WATTS - COOLING

Blower Speed Options	Motor Watts @ Various External Static Pressures - in. wg.																			
	First Stage									Second Stage										
	0	0.1	0.2	0.3	0.4	0.5	0.6	0.7	0.8	0	0.1	0.2	0.3	0.4	0.5	0.6	0.7	0.8	0.9	1.0
Increase (+10%) Cool CFM																				
Low	34	62	76	98	125	146	175	197	213	83	118	153	178	210	243	273	320	347	380	408
Medium-Low	52	80	102	134	167	188	211	242	267	132	162	217	252	316	339	384	435	465	502	541
Medium-High	70	106	135	174	200	235	268	309	336	242	279	329	376	426	464	497	547	601	643	673
High	105	147	182	218	267	303	341	395	412	350	397	443	515	559	619	681	739	770	813	869
Default Cool CFM																				
Low	30	51	67	92	107	131	145	165	192	55	83	114	147	181	204	241	261	290	324	360
Medium-Low	39	67	89	115	139	170	194	224	242	99	142	166	212	243	289	333	367	399	432	473
Medium-High	61	91	116	142	176	198	219	261	283	174	193	264	304	350	387	434	478	517	549	575
High	79	112	154	179	221	247	292	326	354	265	312	357	411	439	516	540	596	649	685	730
Decrease (-10%) Cool CFM																				
Low	25	43	58	80	100	113	136	152	166	48	72	101	123	151	181	198	229	256	283	300
Medium-Low	36	59	82	102	123	142	173	196	210	73	106	144	172	204	234	268	311	345	370	405
Medium-High	41	68	90	117	149	178	199	225	247	105	146	172	217	262	308	353	388	417	459	487
High	61	93	118	150	181	205	239	266	302	204	228	276	331	391	422	458	492	530	566	609

BLOWER DATA

SLP99DF090XV60C BLOWER PERFORMANCE (less filter)

HEATING BLOWER PERFORMANCE - 0 through 0.8 in. w.g. External Static Pressure Range

Heating Adjust CFM Selections	Heating Input Range and Blower Volume - CFM							
	35%	40%	50%	60%	70%	80%	90%	100%
Increase (+15%) Heat CFM	653	728	877	1027	1176	1326	1475	1625
Increase (+7.5%) Heat CFM	603	673	813	953	1092	1232	1372	1512
Default Heat CFM	553	618	748	878	1009	1139	1269	1399
Decrease (-7.5%) Heat CFM	510	570	690	811	931	1051	1171	1292
Decrease (-15%) Heat CFM	467	522	632	743	853	963	1074	1184

COOLING BLOWER PERFORMANCE - 0 through 1.0 in. w.g. External Static Pressure Range

Cooling Adjust CFM Selections	Blower Speed Selections							
	First Stage Cool Speed - cfm				Second Stage Cool Speed - cfm			
	Low	Medium-Low	Medium High	High (Default)	Low	Medium-Low	Medium High	High (Default)
Increase (+10%) Cool CFM	1110	1265	1395	1600	1600	1750	1965	2130
Default Cool CFM	1000	1145	1275	1445	1445	1625	1805	1975
Decrease (-10%) Cool CFM	885	1060	1145	1265	1265	1445	1645	1805

The effect of static pressure is included in air volumes shown.
The following control configurations are available. See Installation Instructions for details and DIP switch settings.

Heat Modes Available (Heating Blower Performance Table):

Single-stage thermostat:
- 35%, 70%, 100% input (three-stage) with time delays in-between

Two-stage thermostat:
- Variable Rate Capacity Mode - furnace automatically adjusts firing rate based on first- and second-stage cycle times.
- W1 demand at 70% input, W2 demand at 100% input. No delay between stages.

Cool Mode Available (Cooling Blower Performance Table):

First stage COOL (two-stage air conditioning units only) is approximately 70% of the same second stage COOL speed position.
Continuous Fan speeds are approximately 28% and 38% (DIP switch selectable) of the same second-stage COOL speed position minimum 250 cfm.

Lennox® Smart Zoning System Applications - Minimum blower speed is 450 cfm.

SLP99DF090XV60C BLOWER MOTOR WATTS - COOLING

Blower Speed Options	Motor Watts @ Various External Static Pressures - in. wg.																			
	First Stage									Second Stage										
	0	0.1	0.2	0.3	0.4	0.5	0.6	0.7	0.8	0	0.1	0.2	0.3	0.4	0.5	0.6	0.7	0.8	0.9	1.0
Increase (+10%) Cool CFM																				
Low	79	108	144	162	207	242	262	293	323	275	299	366	399	449	483	532	584	605	644	680
Medium-Low	120	156	187	233	261	279	329	368	401	387	409	471	521	562	606	650	688	716	762	800
Medium-High	155	202	235	293	317	369	407	453	502	547	577	622	667	744	795	835	872	910	950	963
High	268	299	366	399	449	483	532	584	605	780	775	811	898	942	994	1048	1071	1082	1080	1073
Default Cool CFM																				
Low	56	86	111	140	170	200	232	259	282	186	219	270	308	361	390	431	489	517	555	590
Medium-Low	93	118	152	195	223	254	283	306	344	278	304	365	420	450	510	544	592	640	665	698
Medium-High	123	161	201	228	260	310	341	381	416	446	475	528	582	616	662	686	747	780	823	855
High	182	219	270	308	361	390	431	489	517	576	603	654	704	756	809	871	902	939	972	975
Decrease (-10%) Cool CFM																				
Low	48	69	101	120	152	175	201	218	249	118	155	181	232	259	299	340	376	402	438	476
Medium-Low	65	94	123	150	185	220	250	278	296	177	205	267	304	353	390	430	486	515	563	587
Medium-High	93	118	152	195	223	254	283	306	344	301	322	392	439	468	531	568	599	647	678	721
High	116	155	181	232	259	299	340	376	402	446	475	528	582	616	662	686	747	780	823	855

BLOWER DATA

SLP99DF110XV60C BLOWER PERFORMANCE (less filter)

HEATING BLOWER PERFORMANCE - 0 through 0.8 in. w.g. External Static Pressure Range

Heating Adjust CFM Selections	Heating Input Range and Blower Volume - CFM							
	35%	40%	50%	60%	70%	80%	90%	100%
Increase (+15%) Heat CFM	811	906	1096	1286	1475	1665	1855	2045
Increase (+7.5%) Heat CFM	744	835	1017	1199	1380	1562	1744	1926
Default Heat CFM	677	764	938	1112	1285	1459	1633	1807
Decrease (-7.5%) Heat CFM	626	707	869	1031	1193	1355	1517	1679
Decrease (-15%) Heat CFM	575	650	800	950	1101	1251	1401	1551

COOLING BLOWER PERFORMANCE - 0 through 1.0 in. w.g. External Static Pressure Range

Cooling Adjust CFM Selections	Blower Speed Selections							
	First Stage Cool Speed - cfm				Second Stage Cool Speed - cfm			
	Low	Medium-Low	Medium High	High (Default)	Low	Medium-Low	Medium High	High (Default)
Increase (+10%) Cool CFM	1090	1260	1395	1580	1580	1790	1990	2180
Default Cool CFM	965	1125	1285	1440	1440	1625	1845	2000
Decrease (-10%) Cool CFM	860	1030	1125	1270	1270	1470	1655	1845

The effect of static pressure is included in air volumes shown.
The following control configurations are available. See Installation Instructions for details and DIP switch settings.

Heat Modes Available (Heating Blower Performance Table):

Single-stage thermostat:
- 35%, 70%, 100% input (three-stage) with time delays in-between

Two-stage thermostat:
- Variable Rate Capacity Mode - furnace automatically adjusts firing rate based on first- and second-stage cycle times.
- W1 demand at 70% input, W2 demand at 100% input. No delay between stages.

Cool Mode Available (Cooling Blower Performance Table):

First stage COOL (two-stage air conditioning units only) is approximately 70% of the same second stage COOL speed position.
Continuous Fan speeds are approximately 28% and 38% (DIP switch selectable) of the same second-stage COOL speed position minimum 250 cfm.

Lennox® Smart Zoning System Applications - Minimum blower speed is 450 cfm.

SLP99DF110XV60C BLOWER MOTOR WATTS - COOLING

Blower Speed Options	Motor Watts @ Various External Static Pressures - in. wg.																			
	First Stage									Second Stage										
	0	0.1	0.2	0.3	0.4	0.5	0.6	0.7	0.8	0	0.1	0.2	0.3	0.4	0.5	0.6	0.7	0.8	0.9	1.0
Increase (+10%) Cool CFM																				
Low	71	99	147	166	202	240	271	302	337	248	280	333	374	429	469	511	548	594	619	677
Medium-Low	127	159	198	225	256	301	325	365	390	409	427	496	531	587	632	665	721	742	781	805
Medium-High	162	204	242	287	316	371	408	446	487	563	589	651	703	755	808	860	888	932	970	1007
High	243	280	333	374	429	469	511	548	594	866	850	915	963	1020	1056	1091	1127	1141	1136	1131
Default Cool CFM																				
Low	57	88	117	140	165	196	232	259	283	167	214	244	291	331	380	405	467	497	539	583
Medium-Low	77	112	147	172	209	250	283	317	345	275	321	348	418	447	505	546	597	632	668	716
Medium-High	122	154	199	230	268	300	331	373	411	461	493	547	572	628	666	703	745	777	819	860
High	167	214	244	291	331	380	405	467	497	601	626	688	730	787	823	880	924	963	994	1011
Decrease (-10%) Cool CFM																				
Low	44	67	99	115	144	167	197	215	245	126	165	201	232	262	305	334	373	417	451	479
Medium-Low	66	97	123	153	186	216	247	275	303	187	219	272	308	360	391	432	479	514	559	588
Medium-High	77	112	147	172	209	250	283	317	345	308	341	390	430	490	528	569	617	640	691	724
High	127	165	201	232	262	305	334	373	417	461	493	547	572	628	666	703	745	777	819	860

REVISIONS

Sections	Description of Change
Dimensions	Updated Furnace/Coil Combined Dimension data for new CK40 coils.
Override Accessories	Added Refrigerant Detection System (RDS) Components.

Visit us at www.Lennox.com
For the latest technical information, www.LennoxPros.com
Contact us at 1-800-4-LENNOX

NOTE - Due to Lennox' ongoing commitment to quality, Specifications, Ratings and Dimensions subject to change without notice and without incurring liability.
Improper installation, adjustment, alteration, service or maintenance can cause property damage or personal injury.
Installation and service must be performed by a qualified installer and servicing agency.

©2024 Lennox Industries, Inc.