PACKAGED ELECTRIC / ELECTRIC

LRP14AC

Three-Phase - R-410A - 60 Hz

COMMERCIAL
PRODUCT SPECIFICATIONS

Bulletin No. 210938
September 2023
Supersedes June 2023

SEER - 14.00
3 to 5 Tons
Cooling Capacity - 34,000 to 57,000 Btuh
Optional Electric Heat - 5 to 23 kW

MODEL NUMBER IDENTIFICATION

L RP 14 AC 36 E Y - 1 - A

Brand
L = Lennox

Product Type
RP = Residential Packaged Unit

Nominal SEER
14 = 14 SEER

Unit Type
AC = Packaged Electric/Electric Unit

Nominal Cooling Capacity - Tons
36 = 3 Tons
42 = 3.5 Tons
48 = 4 Tons
60 = 5 Tons

Blower
E = High Efficiency Constant Torque Blower Motor

Voltage
Y = 208/230V-3 phase-60Hz
G = 460V-3 phase-60Hz

Major Revision Sequence
1 = 1st Generation

Minor Revision Sequence
A = 1st Generation

CONTENTS

Approvals And Warranty 2
Blower Data 12
Dimensions 19
- Accessories 20
- Unit 19
Electrical/Electric Heat Data 15
Electric Heat Capacities 17
Features 3
Installation Clearances 17
Model Number Identification. 1
Options / Accessories 7
Ratings 10
Specifications 9
Weight Data 18
- Options / Accessories. 18
- Unit 18

APPROVALS AND WARRANTY

APPROVALS

- AHRI Standard 210/240 certified
- Design Certified by ETL Intertek
- Unit and components ETL, NEC and CEC bonded for grounding to meet safety standards for servicing
- Optional electric heaters are ETL listed for the US and Canada and are rated and tested according to DOE test procedures and FTC labeling regulations
- All models with the Optional Seismic Strapping Kit installed have Seismic Certification for 2018 International Building Code (IBC) and 2019 California Building Code (CBC) ASCE 7
- All models are ASHRAE 90.1 compliant

WARRANTY

- Compressors - Limited five years
- All other covered components - Limited one year

FEATURES

COOLING SYSTEM

R-410A Refrigerant
- Non-chlorine based
- Ozone-friendly
- Factory pre-charged

Evaporator and Condenser Coils
- Copper tube with aluminum fin coils
- Factory leak tested

Anti-Microbial Condensate Drain Pan
- Anti-Microbial additive resists growth of mold and mildew on drain pan which improves indoor air quality and reduces drain line blockage
- Insulated to reduce condensation
- Side drain connection

Drain Pan Overflow Switch
- Monitors condensate level in drain pan
- Shuts down unit if drain becomes clogged

Outdoor Coil Fan Motor
- Weather protected heavy duty condenser fan motor
- Coated steel fan blades for long life
- Corrosion-resistant coated steel fan guard
- Internally mounted
- Totally enclosed fan motor

High Pressure Switch
- Protects the system from high pressure conditions
- Automatic reset.

Loss of Charge Switch
- Shuts off unit if suction pressure falls below setting
- Loss of charge and freeze-up protection

Service Valves
- Fully serviceable brass valves installed in discharge & liquid lines

COMPRESSOR

Scroll Compressor
- High volumetric efficiency
- Uniform suction flow
- Constant discharge flow
- Quiet operation
- Low gas pulses during compression reduces operational sound levels
- Compressor motor is internally protected from excessive current and temperature
- Compressor is installed in the unit on resilient rubber mounts for vibration free operation

Scroll Compressor Operation
- Two involute spiral scrolls matched together generate a series of crescent-shaped gas pockets between them
- During compression, one scroll remains stationary while the other scroll orbits around it
- Gas is drawn into the outer pocket, the pocket is sealed as the scroll rotates
- As the spiral movement continues, gas pockets are pushed to the center of the scrolls. Volume between the pockets is simultaneously reduced
- When the pocket reaches the center, gas is now at high pressure and is forced out of a port located in the center of the fixed scrolls
- During compression, several pockets are compressed simultaneously resulting in a smooth continuous compression cycle
- Continuous flank contact, maintained by centrifugal force, minimizes gas leakage and maximizes efficiency
- Compressor is tolerant to the effects of slugging and contaminants. If this occurs, scrolls separate, allowing liquid or contaminants to be worked toward the center and discharged
- Muffler in discharge line reduces operating sound levels

Optional Accessories

Field Installed

Compressor Crankcase Heater
- Protects against refrigerant migration that can occur during low ambient operation

Compressor Timed-Off Control
- Prevents compressor short-cycling
- Allows time for suction and discharge pressure to equalize
- Permits compressor start-up in an unloaded condition
- Automatic reset
- Five minute delay between compressor shut-off and start-up

Indoor Coil Freeze Protection
- Senses suction line temperature
- Cycles compressor off when suction line temperature falls below its setpoint

Low Ambient Kit (40°F)
- Cycles the outdoor fan while allowing compressor operation in the cooling cycle
- This intermittent fan operation allows the system to operate without icing the evaporator coil and losing capacity
- Designed for use in ambient temperatures no lower than 40°F

NOTE - Crankcase heater and freezestat are recommended on compressor equipped with a low ambient kit.

FEATURES

CABINET

- Conditioned areas insulated with foil faced insulation to minimize heat loss and reduce operating sound levels
- Powder paint for maximum durability
- Full perimeter heavy-gauge galvanized steel base rails
- Base rails have rigging holes
- Two sides of the base rails have forklift slots
- Raised edges around duct and power entry openings in the bottom of the unit for water protection
- Easy service access
- Steel louvered panels provides complete coil protection

Airflow Choice
- Units are shipped with supply and return air duct covers installed for downflow or horizontal conversion

Electrical Inlets and Service Valves
- Field wiring inlets are located in one central area of the cabinet
- See dimension drawing
- Service valves with gauge ports are located inside the cabinet

Optional Accessories

Field Installed

Bottom Power Entry Kit
- Allows high and low voltage wiring connections through the unit base pan

Base Rail Openings Closure Kit
- Kit consists of panels and hardware to cover rigging holes and forklift slots in unit base rails

Rectangular to Round Duct Adaptor Kits
- Downflow or horizontal kits available
- Converts rectangular supply and return air openings on unit cabinet to round diameter
- Several sizes available

Tool-Less Filter Access Kit
- Converts blower access panel to two-piece deisgn
- One panel is equipped with tool-less latches for ease filter access without removing entire blower panel

NOTE - Tool-Less Filter Access Kit is not for seismic-rated applications.

CONTROLS

24 Volt Transformer
- 70VA transformer furnished and factory installed in control area

Field Installed

Smoke Detector
- Photoelectric type
- Installed in supply air and/or return air ducts
- Available with one sensor or two sensors

BLOWER

- Direct drive blower
- Blower wheel is statically and dynamically balanced
- Resiliently mounted
- Blower assembly easily removed for servicing

Constant Torque Blower Motor
- DC Brushless Motor
- High Efficiency Constant Torque
- ECM (Electronically Commutated Motor)
- Motor is programmed to provide constant torque at each of the selectable speeds
- Fixed blower “On” delay prevents cold air from entering system during gas heating demand
- See Blower Performance tables

INDOOR AIR QUALITY

Air Filters
- Filter rack furnished as standard
- See Specifications Table for sizes

NOTE - Filters must be field provided.

OPTIONS / ACCESSORIES

ELECTRIC HEAT (5-23 KW)

Optional Accessories

Field Installed

- Field installed internal to unit cabinet
- Available in several voltages and kW sizes
- Helix wound nichrome heating elements exposed directly in air stream
- Instant heat transfer
- Low element temperatures and long service life
- Cutoff limit control provides positive protection in case of excessive temperatures
- Factory assembled with controls installed and wired

NOTE - Field wiring for electric heat is separate from the unit power supply. A second, separate power source is required.

ECONOMIZER

Field Installed

Economizer
(Standard and High Performance Common Features)

- Convertible to downflow or horizontal
- Outdoor Air Hood is furnished
- Includes Barometric Relief Dampers with Exhaust Hood
- Barometric Relief Dampers allow relief of excess air,
- Aluminum blade dampers prevent blow back and outdoor air infiltration during off cycle
- Exhaust hood with bird screen furnished
- Single temperature control is furnished with Economizer
- Outdoor air sensor enables Economizer if the outdoor temperature is less than the setpoint of the control

Standard Economizer Features (Not for Title 24)

- Gear-driven action
- Return air and outdoor air dampers
- Plug-in connections to unit
- Nylon bearings
- Neoprene seals
- 24-volt
- Fully-modulating spring return motor

Standard Economizer Control Module
The Standard Economizer Control Module can be adjusted to operate based on outdoor air temperatures

Economizer Controls:

- Damper Minimum Position - Can be set lower than traditional minimum air requirements resulting in cost savings
- Free Cool LED - A steady green LED indicates outdoor air is suitable for free cooling

NOTE - Free Cooling runs when outdoor air temperature is lower than the set temperature on the economizer control.

NOTE: The Free Cooling default setting for outdoor air temperature sensor is 55°F.

High Performance Economizer Features

- Approved for California Title 24 building standards
- Low leakage dampers are Air Movement and Control Association International (AMCA) Class 1A Certified - Maximum 3 cfm per sq. ft. leakage at 1 in. w.g.
- ASHRAE 90.1-2010 compliant
- Gear-driven action
- High torque 24-volt fully-modulating spring return damper motor
- Return air and outdoor air dampers
- Plug-in connections to unit
- Stainless steel bearings
- Enhanced neoprene blade edge seals
- Flexible stainless steel jamb seals minimize air leakage

NOTE - High Performance Economizers are not approved for use with enthalpy controls in Title 24 applications.

NOTE - The Free Cooling setpoint for Title 24 applications must be set based on the Climate Zone where the system is installed. See Section 140.4 "Prescriptive Requirements for Space Conditioning Systems" of the California Energy Commission's 2013 Building Energy Efficiency Standards. Refer to Installation Instructions for complete setup information and menu parameters available.

High Performance Economizer Control Module

- Module provides inputs and outputs to control economizer based on parameter settings
- Module automatically detects sensors by polling to determine which sensors are installed in system
- Module displays any alarm messages (fault detection and diagnostics) as an aid in troubleshooting
- Non-volatile memory retains parameter settings in case of power failure
- Keypad with four navigation buttons and LCD screen is furnished for setting economizer parameters
  - Menu Up/Exit button returns to the main menu
  - Arrow Up ▲ button moves to the previous or next parameter within the selected menu
  - Arrow Down ▼ button moves to the next parameter within the selected menu
  - Select (enter) ↵ button confirms parameter selection

ECONOMIZER (continued)

High Performance Economizer Control Module (continued)
Main Menu Structure:

- STATUS (economizer and system operation status)
- SETPOINTS (settings for various setpoint parameters)
- SYSTEM SETUP (settings/information about the system)
- ADVANCED SETUP (freeze protection, CO_2 settings, stage 3 delay, and additional calibration settings)
- CHECKOUT (damper positions)
- ALARMS (output signal that can be configured for remote alarm monitoring)

NOTE - Refer to Installation Instructions for complete setup information and menu parameters available.

Field Installed

Single Enthalpy Temperature Control (Not for Title 24)

- Outdoor air enthalpy sensor enables Economizer if the outdoor enthalpy is less than the setpoint of the control

OUTDOOR AIR

Field Installed

Outdoor Air Dampers - Downflow

- Single blade damper
- 0 to 25% (fixed) outdoor air adjustable
- Installs in unit
- Outdoor air hood is furnished
- Automatic model features fully modulating spring return damper motor with plug-in connection
- Manual model features a slide damper

NOTE - Maximum mixed air temperature in cooling mode is 100°F.

ROOF CURBS

Field Installed

Clip Curb (Full Perimeter)

- Interlocking tabs fasten corners together
- No tools required for assembly
- Fully gasketed around curb perimeter and supply and return openings
- Available in 8, 14, 18 and 24 inch heights
- Shipped knocked down

Adjustable Pitch Clip Curb (Full Perimeter)

- Fully adjustable pitch curb provides a level platform for packaged units
- Allows flexible installations on roofs with sloped or uneven angles
- Adjustable from 2/12 to 6/12 pitch
- Fully gasketed around curb perimeter and supply and return openings
- Shipped knocked down

All Curbs

- IBC 2018 compliant
- CBC 2019 compliant
- Seismic rating - SDS 2.0g, z/h=1, Ip=1.5
- Wind rating - 240 mph (Lateral), 214 mph (Uplift)
- Maximum load rating - 800 lbs.

Adaptor Curbs (not shown)

- Curbs are regionally sourced
- Dimensions vary based upon the source

NOTE - Contact your local sales representative for a detailed cut sheet with applicable dimensions.

Strapping Kit - Hurricane

- Galvanized steel .07 in. thick minimum
- Attaches unit base rails to host structure
- Separate kits available for Slab Mount or Rail Mount

Strapping Kit - Seismic

- Heavy-gauge galvanized steel
- Kit contains 4 brackets and mounting hardware

OPTIONS / ACCESSORIES

Item		Catalog No.	Model No. LRP14AC36	LRP14AC42	LRP14AC48	LRP14AC60
COOLING SYSTEM						
Compressor Crankcase Heater	208/230V-3ph	**11X27**	X	X	X	X
	460V-3ph	**21D21**	X	X	X	X
Compressor Timed-Off Control		**47J27**	X	X	X	X
Freezestat		**21D23**	X	X	X	X
Low Ambient Kit (40°F)		**21D20**	X	X	X	X
CABINET						
Base Rail Openings Closure Kit		**21J84**	X	X	X	X
Rectangular to Round Duct Adaptor Kits	Downflow - 14 in. dia.	**21D26**	X	X	X	X
	Horizontal - 14 in. dia.	**21D24**	X	X	X	X
	- 16 in. dia.	**22U78**	X	X	X	X
	- 18 in. dia.	**22U79**	X	X	X	X
[1] Tool-Less Filter Access Kit		**21J80**	X	X	X	X
CONTROLS						
Smoke Detector - Supply or Return (one sensor)		**21U21**	X	X	X	X
Smoke Detector - Supply and Return (two sensors)		**21U22**	X	X	X	X
ELECTRICAL						
Bottom Power Entry Kit		**21J78**	X	X	X	X
[2] ELECTRIC HEAT						
5 kW	208/230V-3ph	**21J30**	X	X	X	X
	460V-3ph	**21J37**	X	X	X	X
10 kW	208/230V-3ph	**21J33**	X	X	X	X
	460V-3ph	**21J38**	X	X	X	X
15 kW	208/230V-3ph	**21J34**	X	X	X	X
	460V-3ph	**21J39**	X	X	X	X
20 kW	208/230V-3ph	**21J35**		X	X	X
	460V-3ph	**21J40**		X	X	X
23 kW	208/230V-3ph	**21J36**				X
	460V-3ph	**21J41**				X
ECONOMIZER						
Standard Economizer With Outdoor Air Hood (Not for Title 24)						
Downflow or Horizontal (Includes Barometric Relief Dampers and Exhaust Hood)		**21U15**	X	X	X	X
High Performance Economizer With Outdoor Air Hood (Approved for California Title 24 Building Standards / AMCA Class 1A Certified)						
Downflow or Horizontal (Includes Barometric Relief Dampers and Exhaust Hood)		**21U17**	X	X	X	X
Economizer Controls						
Single Enthalpy Control (Standard)		**21Z09**	X	X	X	X
Single Enthalpy Control (High Performance)		**11G21**	X	X	X	X

[1] Not for seismic-rated applications.
[2] Field wiring for electric heat is separate from the unit power supply. A second, separate power source is required.

X = Field Installed

OPTIONS / ACCESSORIES

Item	Catalog No.	Model No.			
		LRP14AC36	LRP14AC42	LRP14AC48	LRP14AC60
OUTDOOR AIR					
Outdoor Air Dampers With Outdoor Air Hood					
Motorized	**21U19**	X	X	X	X
Manual	**21U20**	X	X	X	X
ROOF CURBS					
Clip Curbs					
8 in height	**21J17**	X	X	X	X
14 in height	**30X48**	X	X	X	X
18 in height	**21J20**	X	X	X	X
24 in height	**21J25**	X	X	X	X
Adjustable Pitch Clip Curb					
14 in height	**30X49**	X	X	X	X
Strapping Kits for Roof Curbs					
Strapping Kit - Hurricane (Slab Mount)	**21J74**	X	X	X	X
Strapping Kit - Hurricane (Rail Mount)	**22C53**	X	X	X	X
Strapping Kit - Seismic	**21J75**	X	X	X	X

X = Field Installed

SPECIFICATIONS

General Data	Nominal Tonnage	**3 Ton**	**3.5 Ton**	**4 Ton**	**5 Ton**
	Model Number	**LRP14AC36**	**LRP14AC42**	**LRP14AC48**	**LRP14AC60**
	Efficiency Type	**Standard**	**Standard**	**Standard**	**Standard**
	Blower Type	Direct Drive (ECM)	Direct Drive (ECM)	Direct Drive (ECM)	Direct Drive (ECM)
Cooling Performance	Gross Cooling Capacity - Btuh	35,200	41,500	48,000	59,000
	[1] Net Cooling Capacity - Btuh	34,000	40,000	46,000	57,000
	AHRI Rated Air Flow - cfm	1200	1400	1600	1800
	Total Unit Power - kW	2.74	3.24	3.71	4.51
	[1] SEER	14.00	14.00	14.00	14.00
	[1] EER	11.50	11.50	11.50	11.50
Refrigerant Charge	Refrigerant Type	R-410A	R-410A	R-410A	R-410A
		7 lbs. 0 oz.	6 lbs. 14 oz.	7 lbs. 3 oz.	8 lbs. 11 oz.
Electric Heat Available - See Electrical/Electric Heat Data Tables		5, 10, and 15 kW	5, 10, 15, and 20 kW	5, 10, 15, and 20 kW	5, 10, 15, 20, and 23 kW
Compressor Type		Scroll (1)	Scroll (1)	Scroll (1)	Scroll (1)
Outdoor Coil	Net face area (total) - sq. ft.	19.53	19.53	19.53	16.60
	Tube diameter - in.	5/16	5/16	5/16	5/16
	Number of rows	1	1	1	2
	Fins per inch	26	26	26	22
Outdoor Coil Fan	Motor - (No.) horsepower	(1) 1/3	(1) 1/3	(1) 1/3	(1) 1/3
	Motor rpm	825	825	825	825
	Total Motor Input - watts	280	280	280	280
	Diameter - (No.) in.	(1) 24	(1) 24	(1) 24	(1) 24
	Number of blades	3	3	3	3
Indoor Coil	Net face area (total) - sq. ft.	6.75	6.75	6.75	6.75
	Tube diameter - in.	5/16	5/16	5/16	3/8
	Number of rows	3	3	3	3
	Fins per inch	15	15	15	15
	Drain connection (Number) and size - in.	(1) 3/4 in. NPT coupling			
	Expansion device type	Refrigerant Metering Orifice			
Indoor Blower	Nominal motor HP	0.75 HP (ECM)	0.75 HP (ECM)	1.0 HP (ECM)	1.0 HP (ECM)
	Blower wheel nominal diameter x width - in.	(1) 12 x 9	(1) 12 x 9	(1) 12 x 9	(1) 12 x 10
[2] Filters	Type of filter	Disposable			
	Number and size - in.	(2) 20 x 20 x 1	(2) 20 x 20 x 1	(2) 20 x 20 x 1	(2) 20 x 20 x 1
Electrical characteristics		208/230V or 460V-60Hz -3ph			

NOTE - Net capacity includes evaporator blower motor heat deduction. Gross capacity does not include evaporator blower motor heat deduction.

[1] AHRI Certified to AHRI Standard 210/240: 95°F outdoor air temperature and 80°F db/67°F wb entering evaporator air; minimum external duct static pressure.

[2] Filters are not furnished and must be field provided.

RATINGS

NOTE − For Temperatures and Capacities not shown in tables, see bulletin − Cooling Unit Rating Table Correction Factor Data in Miscellaneous Engineering Data section.

3 TON - LRP14AC36

Entering Wet Bulb Temperature	Total Air Volume	Outdoor Air Temperature Entering Outdoor Coil																								
		85°F					95°F					105°F					115°F					125°F				
		Total Cool Cap.	Comp. Motor Input	Sensible/Total Ratio (S/T) Dry Bulb			Total Cool Cap.	Comp. Motor Input	Sensible/Total Ratio (S/T) Dry Bulb			Total Cool Cap.	Comp. Motor Input	Sensible/Total Ratio (S/T) Dry Bulb			Total Cool Cap.	Comp. Motor Input	Sensible/Total Ratio (S/T) Dry Bulb			Total Cool Cap.	Comp. Motor Input	Sensible/Total Ratio (S/T) Dry Bulb		
	cfm	kBtuh	kW	75°F	80°F	85°F	kBtuh	kW	75°F	80°F	85°F	kBtuh	kW	75°F	80°F	85°F	kBtuh	kW	75°F	80°F	85°F	kBtuh	kW	75°F	80°F	85°F
59°F	1050	34.2	1.93	.94	1.00	1.00	32.8	2.21	.96	1.00	1.00	31.2	2.52	.98	1.00	1.00	29.6	2.89	1.00	1.00	1.00	27.6	3.32	1.00	1.00	1.00
	1200	35.6	1.93	.97	1.00	1.00	34.0	2.21	.99	1.00	1.00	32.4	2.52	1.00	1.00	1.00	30.6	2.89	1.00	1.00	1.00	28.6	3.33	1.00	1.00	1.00
	1350	36.8	1.94	1.00	1.00	1.00	35.2	2.21	1.00	1.00	1.00	33.6	2.53	1.00	1.00	1.00	31.6	2.90	1.00	1.00	1.00	29.4	3.33	1.00	1.00	1.00
63°F	1050	35.0	1.93	.76	.91	1.00	33.2	2.20	.78	.93	1.00	31.6	2.52	.80	.95	1.00	29.6	2.88	.83	.98	1.00	27.6	3.32	.86	1.00	1.00
	1200	36.0	1.93	.79	.95	1.00	34.4	2.21	.82	.97	1.00	32.6	2.53	.84	.99	1.00	30.6	2.90	.86	1.00	1.00	28.6	3.32	.90	1.00	1.00
	1350	37.0	1.94	.83	.98	1.00	35.2	2.22	.85	1.00	1.00	33.6	2.53	.87	1.00	1.00	31.6	2.90	.90	1.00	1.00	29.4	3.32	.93	1.00	1.00
67°F	1050	37.0	1.94	.60	.74	.88	35.2	2.21	.61	.76	.90	33.4	2.53	.61	.78	.92	31.2	2.90	.63	.80	.95	28.8	3.33	.66	.84	.98
	1200	38.0	1.95	.62	.77	.92	36.0	2.21	.63	.79	.94	34.0	2.53	.64	.82	.96	31.8	2.89	.65	.84	.99	29.4	3.32	.69	.88	1.00
	1350	38.5	1.95	.64	.80	.95	36.8	2.22	.64	.83	.97	34.6	2.53	.66	.85	1.00	32.4	2.90	.68	.88	1.00	30.0	3.33	.71	.92	1.00
71°F	1050	39.0	1.95	.45	.59	.72	37.2	2.22	.45	.60	.73	35.2	2.53	.46	.59	.75	33.0	2.90	.45	.61	.78	30.6	3.33	.46	.63	.82
	1200	40.0	1.95	.46	.61	.75	38.0	2.23	.46	.62	.77	36.0	2.54	.47	.62	.79	33.8	2.90	.47	.64	.82	31.0	3.33	.47	.68	.86
	1350	41.0	1.96	.47	.63	.79	39.0	2.23	.47	.64	.81	36.6	2.54	.48	.65	.83	34.2	2.90	.48	.67	.86	31.6	3.33	.48	.71	.90

3.5 TON - LRP14AC42

Entering Wet Bulb Temperature	Total Air Volume	Outdoor Air Temperature Entering Outdoor Coil																								
		85°F					95°F					105°F					115°F					125°F				
		Total Cool Cap.	Comp. Motor Input	Sensible/Total Ratio (S/T) Dry Bulb			Total Cool Cap.	Comp. Motor Input	Sensible/Total Ratio (S/T) Dry Bulb			Total Cool Cap.	Comp. Motor Input	Sensible/Total Ratio (S/T) Dry Bulb			Total Cool Cap.	Comp. Motor Input	Sensible/Total Ratio (S/T) Dry Bulb			Total Cool Cap.	Comp. Motor Input	Sensible/Total Ratio (S/T) Dry Bulb		
	cfm	kBtuh	kW	75°F	80°F	85°F	kBtuh	kW	75°F	80°F	85°F	kBtuh	kW	75°F	80°F	85°F	kBtuh	kW	75°F	80°F	85°F	kBtuh	kW	75°F	80°F	85°F
59°F	1225	40.0	2.33	.93	1.00	1.00	38.0	2.67	.95	1.00	1.00	36.4	3.06	.97	1.00	1.00	34.4	3.49	.99	1.00	1.00	32.2	3.99	1.00	1.00	1.00
	1400	41.5	2.33	.96	1.00	1.00	39.5	2.67	.98	1.00	1.00	37.8	3.05	1.00	1.00	1.00	35.6	3.48	1.00	1.00	1.00	33.4	3.98	1.00	1.00	1.00
	1575	42.5	2.33	.99	1.00	1.00	41.0	2.66	1.00	1.00	1.00	39.0	3.04	1.00	1.00	1.00	36.8	3.49	1.00	1.00	1.00	34.4	3.98	1.00	1.00	1.00
63°F	1225	40.5	2.33	.76	.91	1.00	39.0	2.67	.77	.92	1.00	36.8	3.05	.80	.94	1.00	34.6	3.50	.82	.97	1.00	32.2	3.99	.85	.99	1.00
	1400	42.0	2.33	.79	.94	1.00	40.0	2.67	.81	.96	1.00	37.8	3.05	.83	.98	1.00	35.8	3.49	.86	1.00	1.00	33.4	3.98	.89	1.00	1.00
	1575	43.0	2.33	.82	.97	1.00	41.0	2.66	.84	.99	1.00	39.0	3.05	.87	1.00	1.00	36.8	3.49	.89	1.00	1.00	34.4	3.97	.92	1.00	1.00
67°F	1225	43.0	2.33	.60	.73	.87	41.0	2.67	.60	.75	.90	39.0	3.05	.61	.77	.92	36.4	3.48	.63	.80	.94	33.6	3.98	.65	.83	.97
	1400	44.0	2.32	.62	.76	.91	42.0	2.66	.63	.79	.93	39.5	3.04	.63	.81	.95	37.0	3.49	.65	.84	.98	34.4	3.98	.68	.87	1.00
	1575	45.0	2.32	.64	.80	.95	43.0	2.66	.64	.82	.96	40.5	3.04	.65	.85	.98	37.6	3.48	.68	.88	1.00	35.0	3.98	.71	.90	1.00
71°F	1225	45.5	2.32	.45	.59	.72	43.0	2.66	.46	.60	.73	41.0	3.05	.46	.60	.75	38.5	3.48	.45	.61	.78	35.4	3.96	.45	.65	.81
	1400	46.5	2.32	.46	.61	.75	44.5	2.65	.46	.62	.76	42.0	3.04	.45	.62	.78	39.0	3.47	.46	.64	.82	36.2	3.98	.47	.67	.85
	1575	47.5	2.31	.46	.63	.78	45.0	2.65	.46	.63	.80	42.5	3.03	.46	.65	.83	40.0	3.47	.47	.67	.86	36.8	3.97	.50	.70	.89

RATINGS

NOTE − For Temperatures and Capacities not shown in tables, see bulletin − Cooling Unit Rating Table Correction Factor Data in Miscellaneous Engineering Data section.

4 TON - LRP14AC48

Entering Wet Bulb Temperature	Total Air Volume	Outdoor Air Temperature Entering Outdoor Coil																									
		85°F					95°F					105°F					115°F					125°F				
		Total Cool Cap.	Comp. Motor Input	Sensible/Total Ratio (S/T) Dry Bulb			Total Cool Cap.	Comp. Motor Input	Sensible/Total Ratio (S/T) Dry Bulb			Total Cool Cap.	Comp. Motor Input	Sensible/Total Ratio (S/T) Dry Bulb			Total Cool Cap.	Comp. Motor Input	Sensible/Total Ratio (S/T) Dry Bulb			Total Cool Cap.	Comp. Motor Input	Sensible/Total Ratio (S/T) Dry Bulb		
	cfm	kBtuh	kW	75°F	80°F	85°F	kBtuh	kW	75°F	80°F	85°F	kBtuh	kW	75°F	80°F	85°F	kBtuh	kW	75°F	80°F	85°F	kBtuh	kW	75°F	80°F	85°F
59°F	1400	44.0	2.70	.91	1.00	1.00	42.5	3.08	.93	1.00	1.00	40.5	3.52	.95	1.00	1.00	38.5	4.07	.97	1.00	1.00	35.8	4.68	.99	1.00	1.00
	1600	46.5	2.70	.95	1.00	1.00	44.5	3.08	.97	1.00	1.00	42.0	3.52	.98	1.00	1.00	40.0	4.05	.99	1.00	1.00	37.2	4.65	1.00	1.00	1.00
	1800	48.0	2.69	.98	1.00	1.00	46.0	3.07	.99	1.00	1.00	43.5	3.52	1.00	1.00	1.00	41.0	4.04	1.00	1.00	1.00	38.5	4.66	1.00	1.00	1.00
63°F	1400	46.0	2.70	.75	.88	.99	43.5	3.07	.76	.90	.99	41.5	3.52	.77	.92	1.00	38.5	4.06	.79	.95	1.00	36.0	4.68	.82	.97	1.00
	1600	47.5	2.70	.77	.92	1.00	45.0	3.07	.78	.94	1.00	42.5	3.52	.80	.96	1.00	40.0	4.05	.82	.98	1.00	37.4	4.67	.86	.99	1.00
	1800	48.5	2.70	.80	.95	1.00	46.0	3.07	.81	.97	1.00	44.0	3.51	.83	.98	1.00	41.0	4.04	.86	.99	1.00	38.5	4.67	.89	1.00	1.00
67°F	1400	49.0	2.70	.58	.72	.85	46.5	3.06	.60	.74	.87	44.0	3.52	.60	.75	.89	41.0	4.05	.62	.77	.92	38.0	4.67	.64	.80	.95
	1600	50.5	2.69	.61	.75	.88	48.0	3.07	.61	.76	.91	45.0	3.52	.63	.78	.93	42.0	4.04	.64	.80	.96	39.0	4.66	.65	.83	.98
	1800	51.5	2.70	.62	.78	.92	48.5	3.06	.63	.79	.95	46.0	3.51	.64	.81	.97	43.0	4.03	.66	.84	.98	39.5	4.65	.68	.87	1.00
71°F	1400	52.0	2.69	.43	.57	.70	49.5	3.06	.43	.58	.71	47.0	3.51	.44	.59	.73	44.0	4.03	.45	.60	.75	40.5	4.65	.43	.62	.77
	1600	53.5	2.69	.44	.59	.73	51.0	3.06	.44	.61	.74	48.0	3.49	.45	.61	.76	45.0	4.02	.44	.63	.78	41.5	4.64	.45	.65	.81
	1800	54.5	2.68	.45	.61	.75	52.0	3.06	.45	.62	.77	49.0	3.50	.45	.63	.79	46.0	4.02	.46	.65	.82	42.5	4.63	.46	.67	.85

5 TON - LRP14AC60

Entering Wet Bulb Temperature	Total Air Volume	Outdoor Air Temperature Entering Outdoor Coil																									
		85°F					95°F					105°F					115°F					125°F				
		Total Cool Cap.	Comp. Motor Input	Sensible/Total Ratio (S/T) Dry Bulb			Total Cool Cap.	Comp. Motor Input	Sensible/Total Ratio (S/T) Dry Bulb			Total Cool Cap.	Comp. Motor Input	Sensible/Total Ratio (S/T) Dry Bulb			Total Cool Cap.	Comp. Motor Input	Sensible/Total Ratio (S/T) Dry Bulb			Total Cool Cap.	Comp. Motor Input	Sensible/Total Ratio (S/T) Dry Bulb		
	cfm	kBtuh	kW	75°F	80°F	85°F	kBtuh	kW	75°F	80°F	85°F	kBtuh	kW	75°F	80°F	85°F	kBtuh	kW	75°F	80°F	85°F	kBtuh	kW	75°F	80°F	85°F
59°F	1700	54.5	3.42	.88	.99	1.00	52.0	3.89	.90	.99	1.00	49.5	4.44	.91	1.00	1.00	47.0	5.05	.94	1.00	1.00	44.0	5.78	.96	1.00	1.00
	1800	55.5	3.43	.89	.99	1.00	53.0	3.90	.91	1.00	1.00	50.5	4.44	.93	1.00	1.00	48.0	5.07	.95	1.00	1.00	45.0	5.76	.97	1.00	1.00
	2250	59.5	3.43	.95	1.00	1.00	57.0	3.91	.96	1.00	1.00	54.0	4.41	.98	1.00	1.00	51.0	5.05	.99	1.00	1.00	47.5	5.76	1.00	1.00	1.00
63°F	1700	57.0	3.42	.72	.85	.96	54.5	3.90	.73	.86	.98	51.5	4.42	.75	.88	.99	48.0	5.04	.77	.90	1.00	45.0	5.76	.78	.93	1.00
	1800	58.0	3.43	.73	.86	.98	55.0	3.89	.74	.88	.99	52.0	4.42	.76	.90	.99	48.5	5.05	.77	.92	1.00	45.5	5.78	.80	.95	1.00
	2250	60.5	3.43	.77	.92	1.00	57.5	3.90	.78	.93	1.00	54.5	4.43	.80	.96	1.00	51.0	5.05	.82	.98	1.00	48.0	5.77	.85	.99	1.00
67°F	1700	60.5	3.42	.58	.70	.82	57.5	3.89	.58	.71	.83	54.5	4.43	.59	.72	.85	51.0	5.04	.61	.74	.87	47.5	5.75	.62	.76	.90
	1800	61.5	3.43	.58	.71	.83	58.0	3.90	.59	.72	.85	55.0	4.42	.60	.74	.87	51.5	5.04	.61	.76	.89	48.0	5.75	.62	.77	.92
	2250	64.0	3.43	.61	.75	.89	60.5	3.90	.62	.77	.91	57.5	4.43	.63	.78	.93	53.5	5.05	.64	.80	.96	49.5	5.76	.65	.83	.98
71°F	1700	64.5	3.44	.42	.56	.68	61.0	3.89	.43	.57	.69	58.0	4.43	.43	.58	.70	54.0	5.05	.44	.59	.72	50.0	5.77	.45	.61	.74
	1800	65.0	3.43	.42	.57	.69	61.5	3.90	.44	.58	.70	58.5	4.44	.44	.58	.71	54.5	5.03	.44	.60	.73	50.5	5.76	.45	.62	.75
	2250	68.0	3.44	.44	.59	.73	64.0	3.90	.45	.61	.74	60.5	4.42	.45	.61	.76	56.5	5.03	.46	.64	.78	52.5	5.78	.47	.65	.81

BLOWER DATA

LRP14AC36

Blower Tap		External Static (in.w.g.)									
		0.1	0.2	0.3	0.4	0.5	0.6	0.7	0.8	0.9	1.0
Tap 1 (Fan Only)	CFM	839	756	658	531	446	366	- - -	- - -	- - -	- - -
	RPM	431	481	540	606	655	702	- - -	- - -	- - -	- - -
	Watts	66	72	78	86	91	97	- - -	- - -	- - -	- - -
Tap 2 (Low Cooling)	CFM	1241	1204	1157	1109	1067	1024	978	931	885	848
	RPM	762	784	809	836	862	891	919	947	973	999
	Watts	261	268	276	283	290	299	307	314	322	329
Tap 3 (High Cooling)	CFM	1547	1508	1477	1440	1398	1364	1332	1291	1260	1220
	RPM	917	940	958	978	999	1018	1040	1063	1085	1106
	Watts	475	484	493	501	511	519	529	538	549	554
[1] Tap 4 (Low Electric Heat)	CFM	1241	1204	1157	1109	1067	1024	978	931	885	848
	RPM	762	784	809	836	862	891	919	947	973	999
	Watts	261	268	276	283	290	299	307	314	322	329
[1] Tap 5 (High Electric Heat)	CFM	1547	1508	1477	1440	1398	1364	1332	1291	1260	1220
	RPM	917	940	958	978	999	1018	1040	1063	1085	1106
	Watts	475	484	493	501	511	519	529	538	549	554

NOTE - All air data is measured external to unit with dry coil and without air filters.
[1] Taps 4 and 5 are used with Optional Electric Heat. Refer to Electric Heat nameplate for proper heat tap selection.

LRP14AC42

Blower Tap		External Static (in.w.g.)									
		0.1	0.2	0.3	0.4	0.5	0.6	0.7	0.8	0.9	1.0
Tap 1 (Fan Only)	CFM	833	758	676	569	493	406	346	- - -	- - -	- - -
	RPM	441	493	547	605	659	708	745	- - -	- - -	- - -
	Watts	67	73	79	87	92	99	103	- - -	- - -	- - -
Tap 2 (Low Cooling)	CFM	1575	1519	1475	1438	1411	1376	1341	1294	1252	1209
	RPM	777	805	832	857	882	908	937	968	995	1024
	Watts	370	382	394	405	416	428	440	454	467	478
Tap 3 (High Cooling)	CFM	1818	1772	1726	1680	1638	1599	1562	1518	1475	1429
	RPM	751	780	806	833	861	884	907	931	962	988
	Watts	396	410	420	433	445	455	465	476	489	500
[1] Tap 4 (Low Electric Heat)	CFM	1575	1519	1475	1438	1411	1376	1341	1294	1252	1209
	RPM	777	805	832	857	882	908	937	968	995	1024
	Watts	370	382	394	405	416	428	440	454	467	478
[1] Tap 5 (High Electric Heat)	CFM	1818	1772	1726	1680	1638	1599	1562	1518	1475	1429
	RPM	751	780	806	833	861	884	907	931	962	988
	Watts	396	410	420	433	445	455	465	476	489	500

NOTE - All air data is measured external to unit with dry coil and without air filters.
[1] Taps 4 and 5 are used with Optional Electric Heat. Refer to Electric Heat nameplate for proper heat tap selection.

BLOWER DATA

LRP14AC48

Blower Tap		External Static (in.w.g.)									
		0.1	**0.2**	**0.3**	**0.4**	**0.5**	**0.6**	**0.7**	**0.8**	**0.9**	**1.0**
Tap 1 (Fan Only)	CFM	839	757	658	532	447	366	- - -	- - -	- - -	- - -
	RPM	431	481	540	606	655	702	- - -	- - -	- - -	- - -
	Watts	66	72	78	86	91	97	- - -	- - -	- - -	- - -
Tap 2 (Low Cooling)	CFM	1677	1624	1577	1526	1481	1432	1385	1336	1279	1226
	RPM	698	729	759	789	816	843	872	902	934	968
	Watts	335	347	359	370	380	390	401	412	425	438
Tap 3 (High Cooling)	CFM	1972	1931	1885	1840	1803	1758	1725	1685	1644	1602
	RPM	797	823	853	880	903	929	951	974	997	1024
	Watts	532	545	560	575	587	601	613	623	634	648
[1] Tap 4 (Low Electric Heat)	CFM	1677	1624	1577	1526	1481	1432	1385	1336	1279	1226
	RPM	698	729	759	789	816	843	872	902	934	968
	Watts	335	347	359	370	380	390	401	412	425	438
[1] Tap 5 (High Electric Heat)	CFM	1972	1931	1885	1840	1803	1758	1725	1685	1644	1602
	RPM	797	823	853	880	903	929	951	974	997	1024
	Watts	532	545	560	575	587	601	613	623	634	648

NOTE - All air data is measured external to unit with dry coil and without air filters.
[1] Taps 4 and 5 are used with Optional Electric Heat. Refer to Electric Heat nameplate for proper heat tap selection.

LRP14AC60

Blower Tap		External Static (in.w.g.)									
		0.1	**0.2**	**0.3**	**0.4**	**0.5**	**0.6**	**0.7**	**0.8**	**0.9**	**1.0**
Tap 1 (Fan Only)	CFM	1378	1320	1269	1223	1160	1099	1030	965	899	833
	RPM	603	639	668	699	740	778	816	855	894	931
	Watts	181	191	197	205	214	224	233	242	251	261
Tap 2 (Low Cooling)	CFM	1980	1936	1893	1852	1816	1780	1740	1703	1660	1615
	RPM	806	833	862	887	903	927	951	971	1002	1029
	Watts	460	472	484	498	504	516	526	536	551	564
Tap 3 (High Cooling)	CFM	2340	2300	2259	2224	2187	2158	2139	2108	2079	2038
	RPM	931	958	981	1004	1027	1047	1063	1081	1099	1116
	Watts	742	760	775	790	805	820	829	841	852	858
[1] Tap 4 (Low Electric Heat)	CFM	2232	2194	2154	2129	2089	2057	2026	1991	1960	1926
	RPM	897	917	946	970	993	1012	1028	1048	1068	1089
	Watts	653	666	683	696	708	722	731	743	755	767
[1] Tap 5 (High Electric Heat)	CFM	2329	2291	2256	2220	2183	2153	2136	2102	2075	2035
	RPM	931	954	980	1000	1025	1044	1061	1081	1102	1116
	Watts	742	757	773	785	804	815	828	841	855	858

NOTE - All air data is measured external to unit with dry coil and without air filters.
[1] Taps 4 and 5 are used with Optional Electric Heat. Refer to Electric Heat nameplate for proper heat tap selection.

BLOWER DATA

AIR RESISTANCE DATA - in. w.g.

Air Volume cfm	Wet Indoor Coil			Optional Economizer	Rectangular to Round Duct Adaptor Kits			
					Downflow	Horizontal		
	036, 042	048	060		14 in. Diameter	14 in. Diameter	16 in. Diameter	18 in. Diameter
600	0.01	0.01	- - -	0.02	- - -	- - -	- - -	- - -
700	0.01	0.01	0.01	0.03	0.13	0.13	- - -	- - -
800	0.01	0.01	0.01	0.04	0.16	0.17	- - -	- - -
900	0.02	0.01	0.01	0.05	0.21	0.21	- - -	- - -
1000	0.02	0.02	0.02	0.06	0.25	0.24	0.11	0.03
1100	0.02	0.02	0.02	0.07	0.30	0.30	0.11	0.03
1200	0.03	0.02	0.02	0.08	0.37	0.36	0.13	0.03
1300	0.03	0.03	0.03	0.10	0.43	0.43	0.17	0.03
1400	0.04	0.03	0.03	0.12	0.51	0.50	0.20	0.03
1500	0.05	0.04	0.03	0.13	0.57	0.57	0.21	0.05
1600	0.05	0.05	0.03	0.15	0.65	0.63	0.26	0.05
1700	0.05	0.05	0.04	0.18	0.72	0.71	0.30	0.06
1800	0.06	0.05	0.04	0.20	0.81	0.80	0.30	0.06
1900	0.06	0.06	0.04	0.21	0.90	0.91	0.40	0.06
2000	0.07	0.06	0.05	0.24	1.01	0.99	0.41	0.06

ELECTRICAL/ELECTRIC HEAT DATA — 3 TON

		Model No.	LRP14AC36	
[1] **Voltage - 60Hz**			**208/230V-3ph**	**460V-3ph**
Compressor		Rated Load Amps	9	5.8
		Locked Rotor Amps	71	38
Outdoor Fan Motor		Full Load Amps	1.8	1
Indoor Blower Motor		Horsepower	0.75	0.75
		Type	ECM	ECM
		Full Load Amps	6	3.2
[2] Maximum Overcurrent Protection (MOCP)		Unit Only	25	15
[3] Minimum Circuit Ampacity (MCA)		Unit Only	19.0	11.4

ELECTRIC HEAT DATA (Electric Heat Only)

Electric Heat Voltage			**208V**	**240V**	**480V**
[2] Maximum Overcurrent Protection (MOCP)	Electric Heat	**5 kW**	25	25	15
		10 kW	35	40	20
		15 kW	50	60	30
[3] Minimum Circuit Ampacity (MCA)	Electric Heat	**5 kW**	20.5	22.5	11.5
		10 kW	33.6	37.6	19.0
		15 kW	46.6	52.6	26.6

NOTE - All units have a minimum Short Circuit Current Rating (SCCR) of 5000 amps.

NOTE - Field wiring for electric heat is separate from the unit power supply. A second, separate power source is required.

[1] Extremes of operating range are plus and minus 10% of line voltage.

[2] HACR type breaker or fuse.

[3] Refer to National or Canadian Electrical Code manual to determine wire, fuse and disconnect size requirements.

ELECTRICAL/ELECTRIC HEAT DATA — 3.5 TON

		Model No.	LRP14AC42	
[1] **Voltage - 60Hz**			**208/230V-3ph**	**460V-3ph**
Compressor		Rated Load Amps	11.2	5.6
		Locked Rotor Amps	84	44
Outdoor Fan Motor		Full Load Amps	1.8	1
Indoor Blower Motor		Horsepower	0.75	0.75
		Type	ECM	ECM
		Full Load Amps	6	3.2
[2] Maximum Overcurrent Protection (MOCP)		Unit Only	30	15
[3] Minimum Circuit Ampacity (MCA)		Unit Only	21.8	11.2

ELECTRIC HEAT DATA (Electric Heat Only)

Electric Heat Voltage			**208V**	**240V**	**480V**
[2] Maximum Overcurrent Protection (MOCP)	Electric Heat	**5 kW**	25	25	15
		10 kW	35	40	20
		15 kW	50	60	30
		20 kW	70	80	40
[3] Minimum Circuit Ampacity (MCA)	Electric Heat	**5 kW**	20.5	22.5	11.5
		10 kW	33.6	37.6	19.0
		15 kW	46.6	52.6	26.6
		20 kW	69.2	78.6	39.6

NOTE - All units have a minimum Short Circuit Current Rating (SCCR) of 5000 amps.

NOTE - Field wiring for electric heat is separate from the unit power supply. A second, separate power source is required.

[1] Extremes of operating range are plus and minus 10% of line voltage.

[2] HACR type breaker or fuse.

[3] Refer to National or Canadian Electrical Code manual to determine wire, fuse and disconnect size requirements.

ELECTRICAL/ELECTRIC HEAT DATA — 4 TON

		Model No.	LRP14AC48	
[1] **Voltage - 60Hz**			**208/230V-3ph**	**460V-3ph**
Compressor		Rated Load Amps	13.8	6.1
		Locked Rotor Amps	83	43
Outdoor Fan Motor		Full Load Amps	1.8	1
Indoor Blower Motor		Horsepower	1.0	1.0
		Type	ECM	ECM
		Full Load Amps	7.6	4
[2] Maximum Overcurrent Protection (MOCP)		Unit Only	40	15
[3] Minimum Circuit Ampacity (MCA)		Unit Only	26.6	12.6

ELECTRIC HEAT DATA (Electric Heat Only)

Electric Heat Voltage			**208V**	**240V**	**480V**
[2] Maximum Overcurrent Protection (MOCP)	Electric Heat	**5 kW**	25	25	15
		10 kW	35	40	20
		15 kW	50	60	30
		20 kW	70	80	40
[3] Minimum Circuit Ampacity (MCA)	Electric Heat	**5 kW**	20.5	22.5	11.5
		10 kW	33.6	37.6	19.0
		15 kW	46.6	52.6	26.6
		20 kW	69.2	78.6	39.6

NOTE - All units have a minimum Short Circuit Current Rating (SCCR) of 5000 amps.

NOTE - Field wiring for electric heat is separate from the unit power supply. A second, separate power source is required.

[1] Extremes of operating range are plus and minus 10% of line voltage.

[2] HACR type breaker or fuse.

[3] Refer to National or Canadian Electrical Code manual to determine wire, fuse and disconnect size requirements.

ELECTRICAL/ELECTRIC HEAT DATA — 5 TON

		Model No.	LRP14AC60	
[1] **Voltage - 60Hz**			**208/230V-3ph**	**460V-3ph**
Compressor		Rated Load Amps	13.2	6.3
		Locked Rotor Amps	93	60
Outdoor Fan Motor		Full Load Amps	1.8	1
Indoor Blower Motor		Horsepower	1.0	1.0
		Type	ECM	ECM
		Full Load Amps	7.6	4
[2] Maximum Overcurrent Protection (MOCP)		Unit Only	35	15
[3] Minimum Circuit Ampacity (MCA)		Unit Only	25.9	12.9

ELECTRIC HEAT DATA (Electric Heat Only)

Electric Heat Voltage			**208V**	**240V**	**480V**
[2] Maximum Overcurrent Protection (MOCP)	Electric Heat	**5 kW**	25	25	15
		10 kW	35	40	20
		15 kW	50	60	30
		20 kW	70	80	40
		23 kW	90	100	50
[3] Minimum Circuit Ampacity (MCA)	Electric Heat	**5 kW**	20.5	22.5	11.5
		10 kW	33.6	37.6	19.0
		15 kW	46.6	52.6	26.6
		20 kW	69.2	78.6	39.6
		23 kW	80.4	91.3	45.9

NOTE - All units have a minimum Short Circuit Current Rating (SCCR) of 5000 amps.

NOTE - Field wiring for electric heat is separate from the unit power supply. A second, separate power source is required.

[1] Extremes of operating range are plus and minus 10% of line voltage.

[2] HACR type breaker or fuse.

[3] Refer to National or Canadian Electrical Code manual to determine wire, fuse and disconnect size requirements.

ELECTRIC HEAT CAPACITIES

Input Voltage	5 kW			10 kW			15 kW			20 kW			23 kW		
	No of Stages	kW input	Btuh Output	No of Stages	kW input	Btuh Output	No of Stages	kW input	Btuh Output	No of Stages	kW input	Btuh Output	No of Stages	kW input	Btuh Output
208	1	3.8	12,800	1	7.5	25,600	1	11.2	38,400	1	17.3	59,100	1	19.9	68,000
220	1	4.2	14,300	1	8.4	28,700	1	12.6	43,000	1	18.3	62,600	1	21.1	71,900
230	1	4.6	15,700	1	9.2	31,400	1	13.8	47,000	1	19.2	65,400	1	22.0	75,200
240	1	5.0	17,100	1	10.0	34,200	1	15.0	51,200	1	20.0	68,200	1	23.0	78,500
440	1	4.2	14,300	1	8.4	28,700	1	12.6	43,000	1	18.3	62,600	1	21.1	71,900
460	1	4.6	15,700	1	9.2	31,400	1	13.8	47,000	1	19.2	65,400	1	22.0	75,200
480	1	5.0	17,100	1	10.0	34,200	1	15.0	51,200	1	20.0	68,200	1	23.0	78,500

INSTALLATION CLEARANCES

	in.	mm
Front	24	610
Right Side (blower and evaporator coil access)	24	610
Left Side (compressor access)	24	610
Back	0	0
Back (with Optional Economizer)	40	1016
Top	48	1219

WEIGHT DATA — UNIT

Model Number	Net		Shipping	
	lbs.	kg	lbs.	kg
LRP14AC36	466	211	476	216
LRP14AC42	487	221	497	225
LRP14AC48	510	231	520	236
LRP14AC60	528	239	538	244

WEIGHT DATA — OPTIONS / ACCESSORIES

	Shipping	
	lbs.	kg
CABINET		
Tool-Less Filter Access Kit	20	9
ECONOMIZER / OUTDOOR AIR		
Economizer		
Economizer, Includes Barometric Relief Dampers and Exhaust Hood	95	43
Outdoor Air Dampers		
Motorized	35	16
Manual	28	13
ELECTRIC HEAT		
5 kW	6	3
7.5 kW	7	3
10 kW	8	4
15 kW	8	4
20 kW	8	4
23 kW	9	4
ROOF CURBS		
Clip Curbs		
8 in. height	63	29
14 in. height	77	35
18 in. height	99	45
24 in. height	132	60
Adjustable Pitch Curb, Downflow		
14 in. height	95	43

DIMENSIONS UNIT

Model Number	CORNER WEIGHTS								CENTER OF GRAVITY			
	AA		BB		CC		DD		EE		FF	
	lbs.	kg	lbs.	kg	lbs.	kg	lbs.	kg	in.	mm	in.	mm
LRP14AC36	107	49	117	53	126	57	116	53	25.25	641	21.50	546
LRP14AC42	111	50	122	55	132	60	122	55	25.25	641	21.50	546
LRP14AC48	117	53	128	58	138	63	127	58	25.25	641	21.50	546
LRP14AC60	121	55	132	60	143	65	132	60	25.25	641	21.50	546

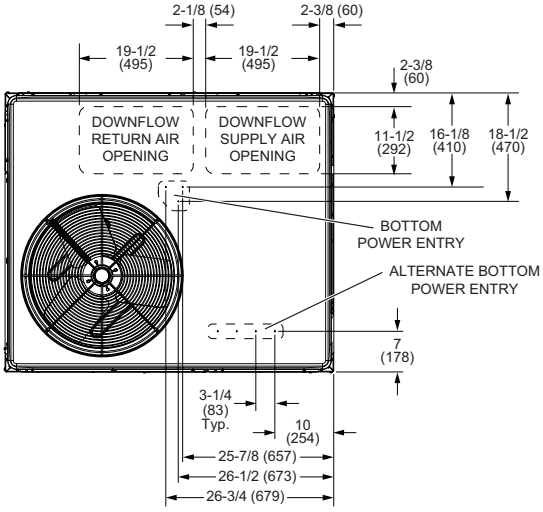

TOP VIEW (Base)

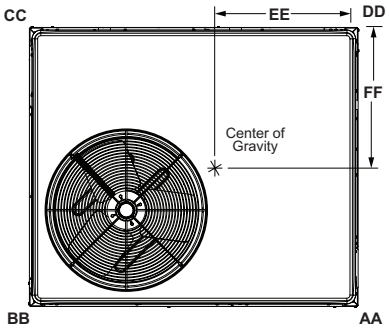

TOP VIEW
(Corner Weight and Center of Gravity)

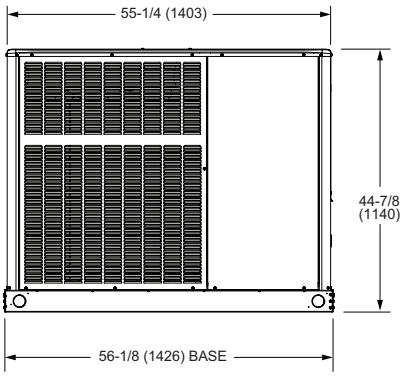

FRONT VIEW

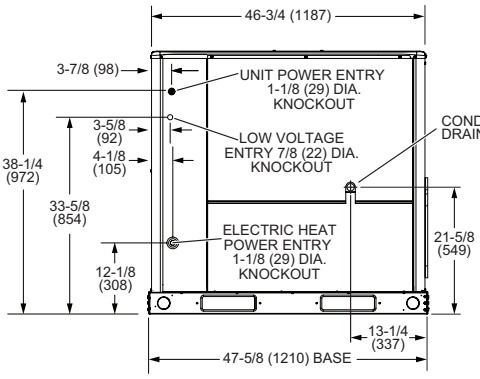

RIGHT SIDE VIEW

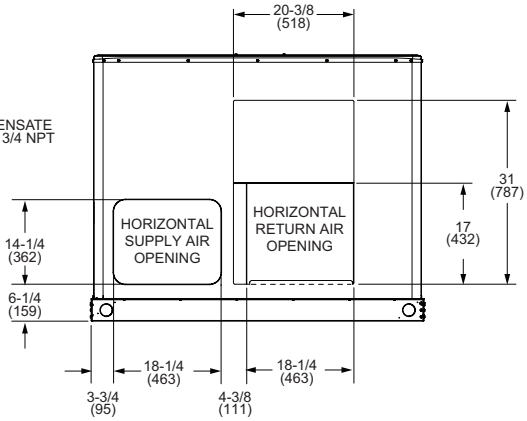

BACK VIEW

OUTDOOR AIR HOOD DETAIL FOR OPTIONAL ECONOMIZER WITH BAROMETRIC RELIEF DAMPERS
(Downflow Applications)

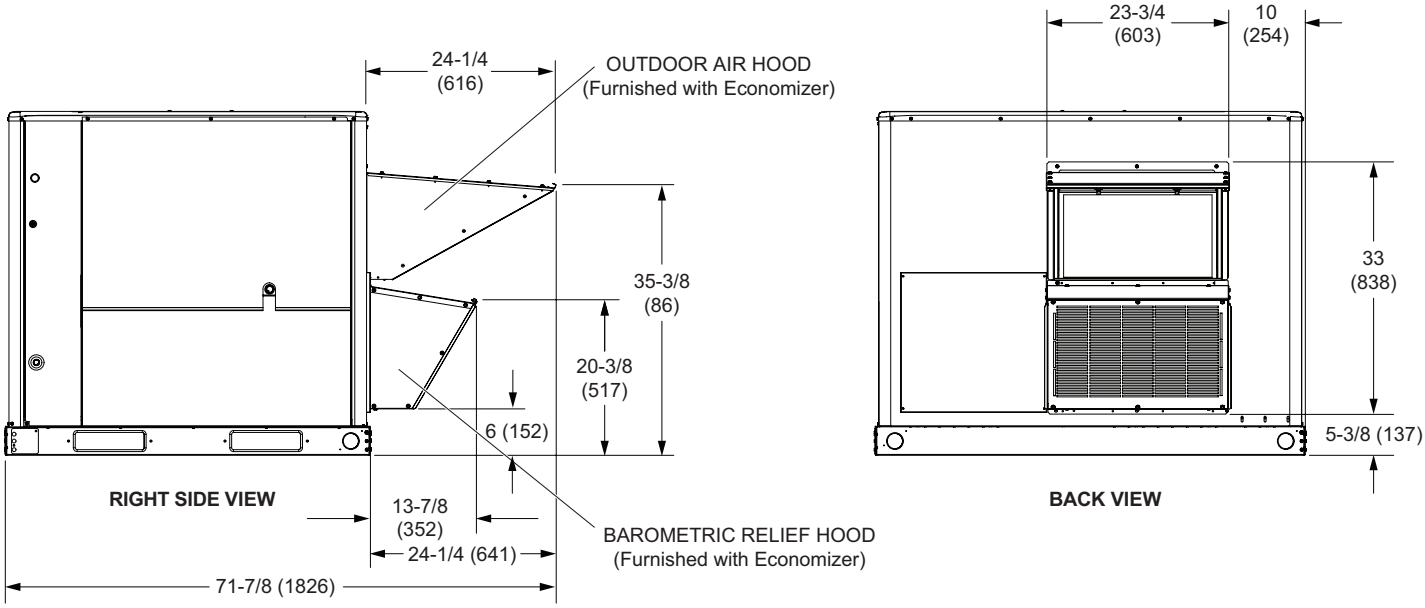

OUTDOOR AIR HOOD DETAIL FOR OPTIONAL ECONOMIZER WITH BAROMETRIC RELIEF DAMPERS
(Horizontal Applications)

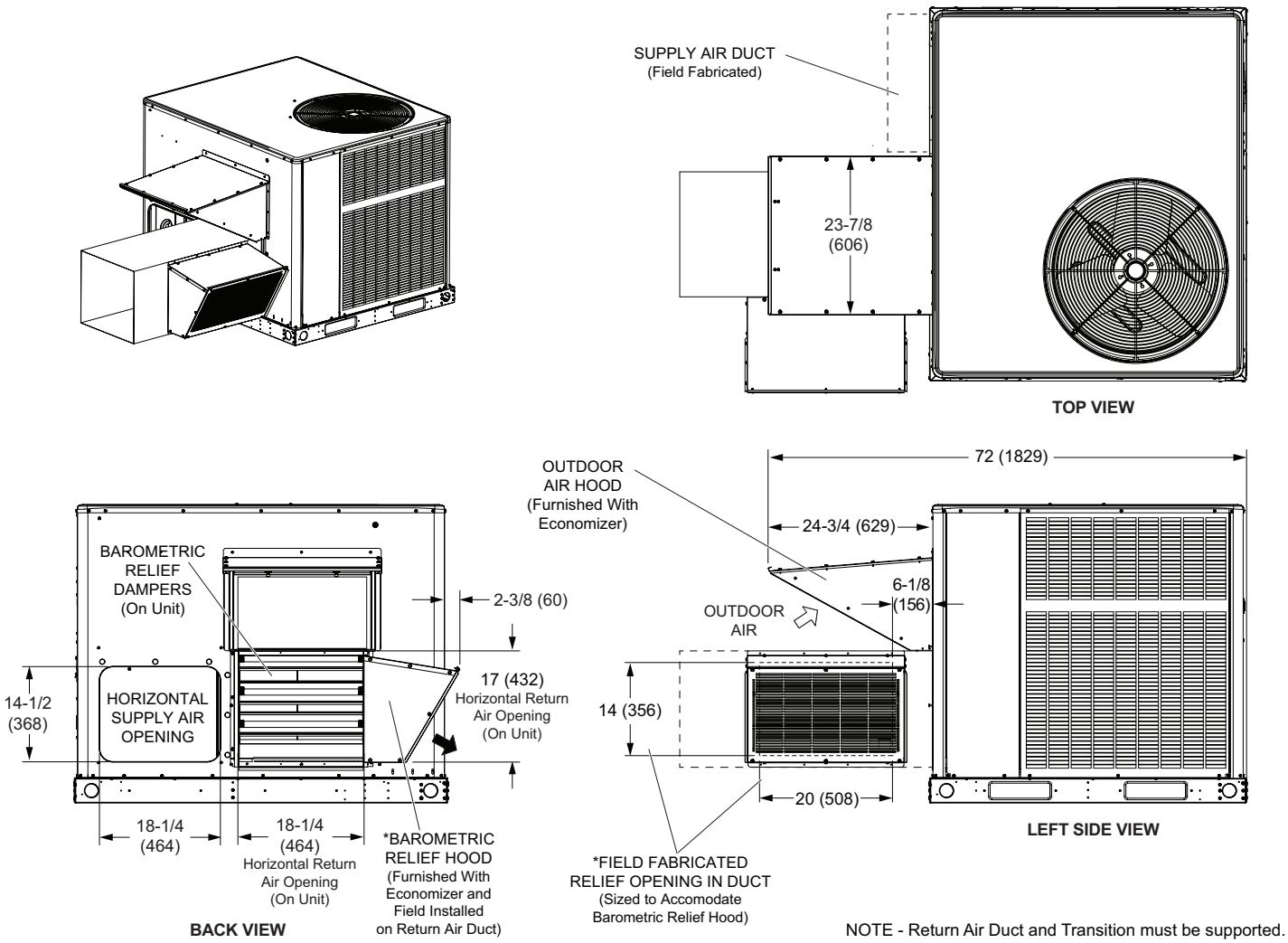

NOTE - Return Air Duct and Transition must be supported.

OUTDOOR AIR HOOD DETAIL FOR OPTIONAL OUTDOOR AIR DAMPERS

MANUAL OUTDOOR AIR DAMPERS

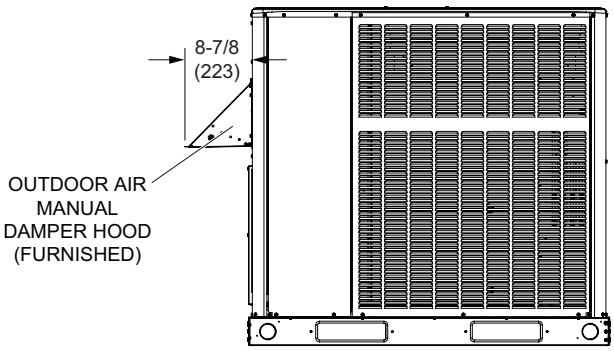

LEFT SIDE VIEW

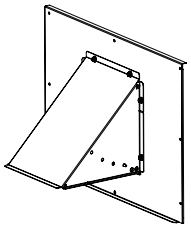

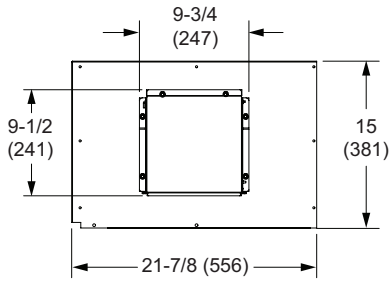

NOTE - Outdoor Air Hood and Panel replaces existing panel on unit.

MOTORIZED OUTDOOR AIR DAMPERS

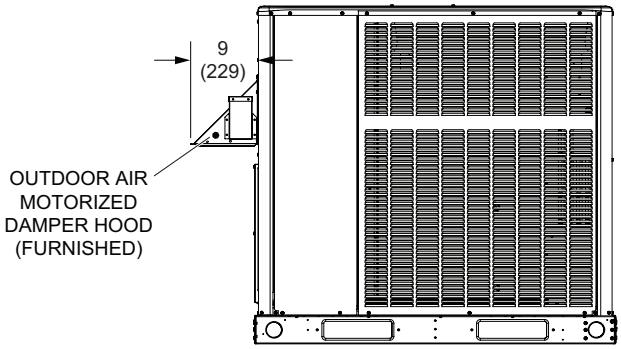

LEFT SIDE VIEW

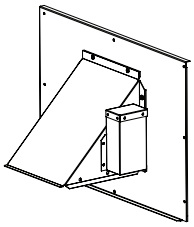

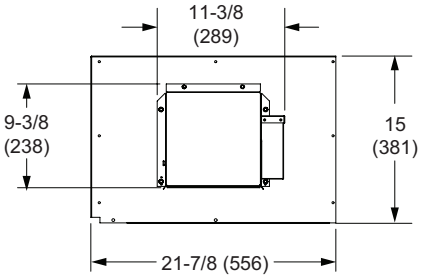

CLIP CURB

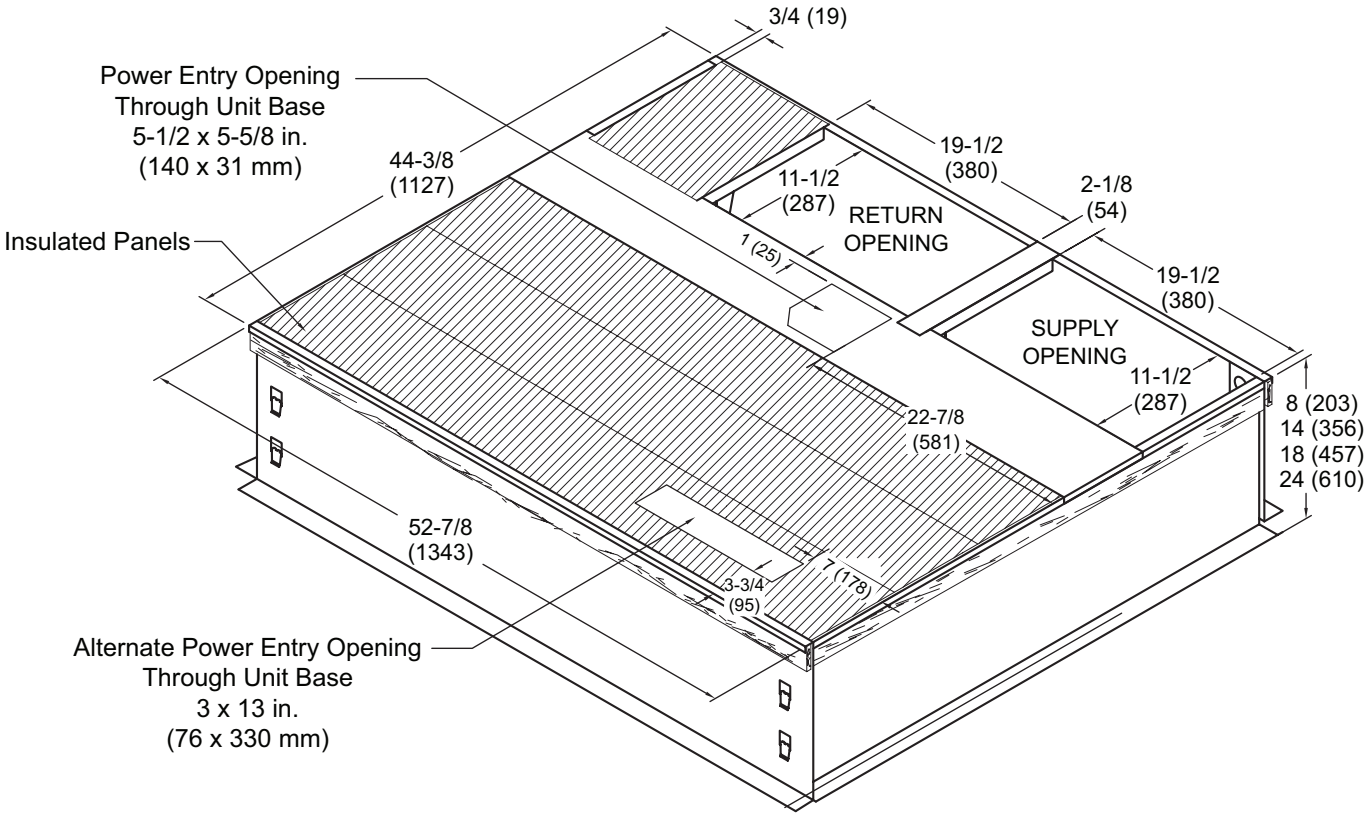

NOTE - Roof deck may be omitted within confines of curb.

TYPICAL FLASHING DETAIL FOR ROOF CURB

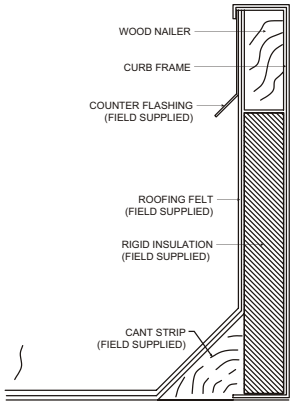

DETAIL ROOF CURB

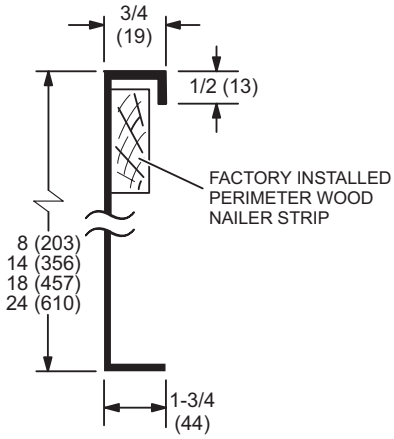

ADJUSTABLE PITCH ROOF CURB

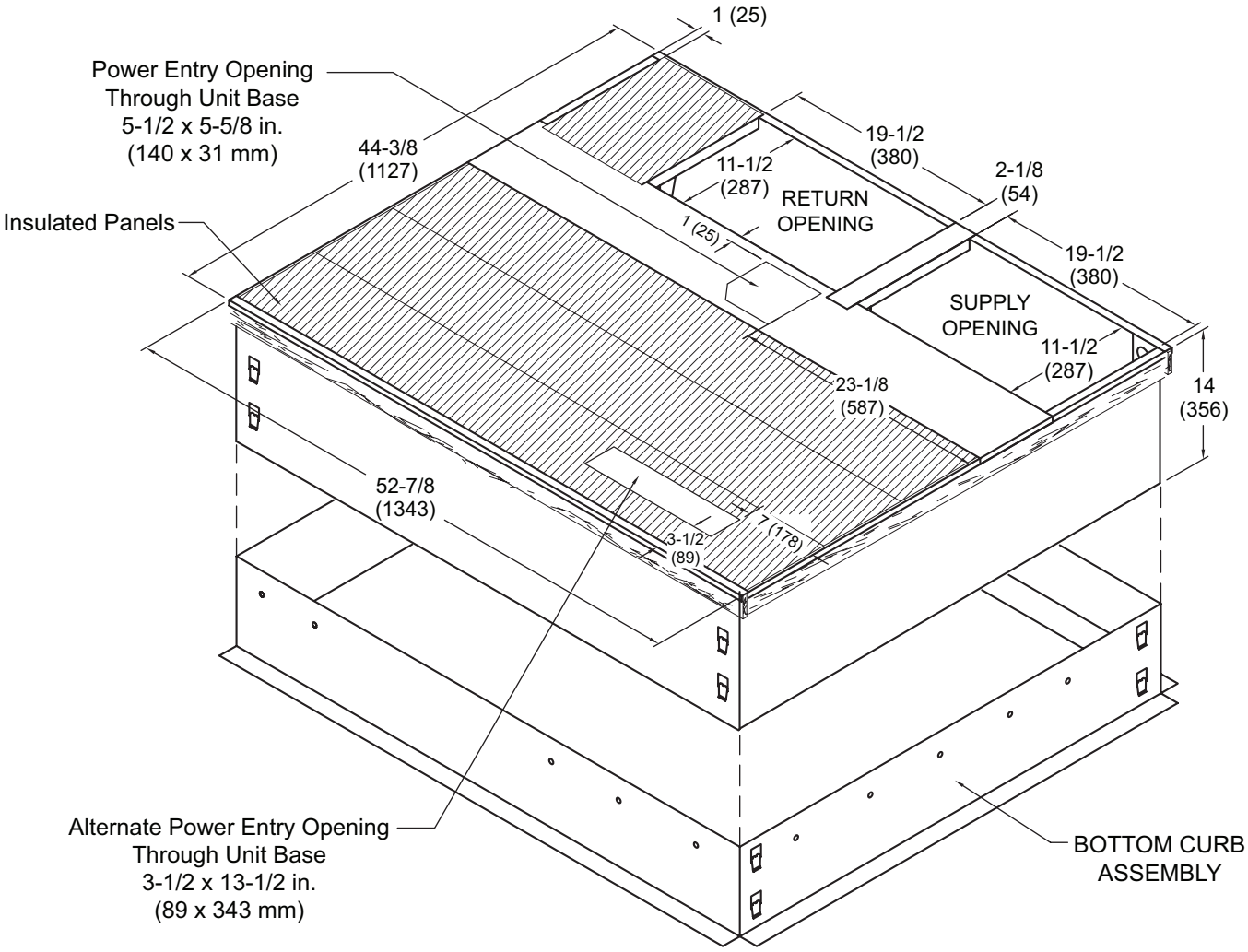

NOTE - Roof deck may be omitted within confines of curb.

TYPICAL FLASHING DETAIL FOR ROOF CURB

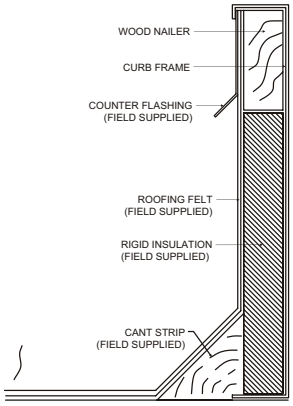

DETAIL ROOF CURB

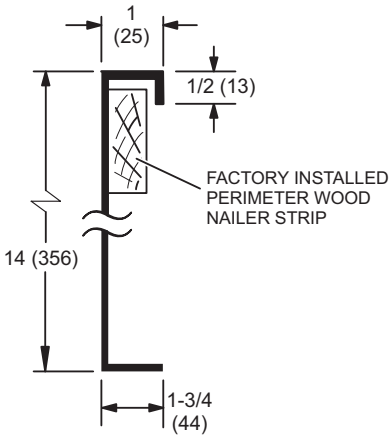

OPTIONAL CONVENTIONAL TEMPERATURE CONTROL SYSTEMS

CS7500 Commercial 7-Day Programmable Thermostat

- Premium Universal Thermostat
- Full Color Touchscreen Interface
- Up To 4 Heat / 3 Cool
- Built-In Sensors For Temperature and Humidity
- Remote Sensors Options For Temperature, Discharge Air, Outdoor Air
- 5-2 or 7-Day Scheduling
- Smooth Setback Recovery
- Heat/Cool Auto-Changeover
- FDD, ASHRAE, IECC Compliant

CS3000 Commercial 5-2 Day Programmable Thermostat

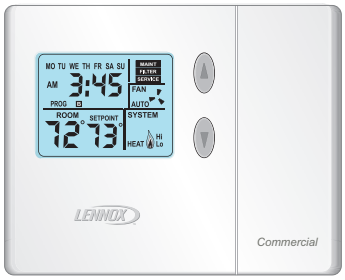

- Conventional Multi-Stage Thermostat
- Intuitive Display
- Push-Button Operation
- Up To 2 Heat / 2 Cool
- Built-In Temperature Sensor
- Remote Temperature Sensing
- Up to 5-2 Day Scheduling
- Smooth Setback Recovery
- Heat/Cool Auto-changeover

Description		Catalog No.
CS7500 Commercial 7-Day Programmable Thermostat		
CS7500 7-Day Thermostat		**24K41**
Sensors/ Accessories	[1] Remote non-adjustable wall-mount 20k	**47W36**
	[1] Remote non-adjustable wall-mount 10k	**47W37**
	Remote non-adjustable discharge air (duct mount)	**19L22**
	Outdoor temperature sensor	**X2658**
CS3000 5-2 Day Programmable Thermostat		
CS3000 5-2 Day Thermostat		**11Y05**
Sensor/ Accessories	Remote non-adjustable wall mount 10k averaging	**47W37**
	Thermostat wall mounting plate	**X2659**
Universal Thermostat Guard with Lock (clear)		
	Inside Dimensions (H x W x D) 5-7/8 x 8-3/8 x 3 in.	**39P21**

[1] Remote wall-mount sensors can be applied in any of the following combinations:
One Sensor - (1) 47W36
Two Sensors - (2) 47W37
Three Sensors - (2) 47W36 and (1) 47W37
Four Sensors - (4) 47W36
Five Sensors - (3) 47W36 and (2) 47W37

REVISIONS

Sections	Description of Change
Options / Accessories	Updated catalog numbers.

Visit us at www.Lennox.com
For the latest technical information, www.LennoxCommercial.com
Contact us at 1-800-4-LENNOX

NOTE - Due to Lennox' ongoing commitment to quality, Specifications, Ratings and Dimensions subject to change without notice and without incurring liability.
Improper installation, adjustment, alteration, service or maintenance can cause property damage or personal injury.
Installation and service must be performed by a qualified installer and servicing agency.

©2023 Lennox Industries, Inc.