GAS FURNACES

EL296DFE

ELITE® SERIES

Downflow - Two-Stage Heat - Constant Torque Blower - 60 Hz

RESIDENTIAL PRODUCT SPECIFICATIONS

Bulletin No. 210648
July 2024
Supersedes all previous versions

ELITE® SERIES

ENERGY STAR

AFUE - Up to 96%
Input - 44,000 to 110,000 Btuh
Nominal Add-on Cooling - 1.5 to 5 Tons

MODEL NUMBER IDENTIFICATION

EL 2 96 DF 070 X E 36 B - 01

Unit Type
EL = Elite® Series

Stages
2 = Two-Stage

AFUE
96 = 96%

Configuration
DF = Downflow

Nominal Gas Heat Input
045 = 44,000 Btuh
070 = 66,000 Btuh
090 = 88,000 Btuh
110 = 110,000 Btuh

Low NOx
X = Units meet California Nitrogen Oxides Standard (40 ng/J)

Blower
E = High Efficiency Constant Torque Blower Motor

Nominal Add-On Cooling Capacity
36 = 1.5-3 tons
48 = 2.5-4 tons
60 = 3-5 tons

[1] **Cabinet Width**
B = 17-1/2 in.
C = 21 in.

Minor Revision Number

[1] Downflow indoor coils with the same letter designation will physically match the furnace **supply air opening**.

FEATURE HIGHLIGHTS

1. Lennox Duralok Plus™ Heat Exchanger
2. Secondary Heat Exchanger
3. Inshot Burners
4. Two-Stage Gas Control Valve
5. Two-Speed Combustion Air Inducer
6. SureLight® Integrated Furnace Control
7. Variable Speed Direct Drive Blower
8. Insulated Cabinet
9. Safety Interlock Switch
10. Gas Piping And Electrical Inlets

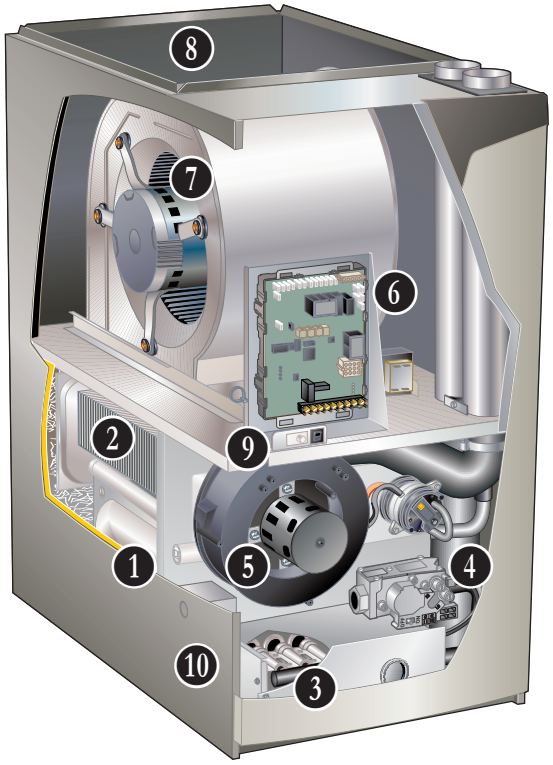

CONTENTS

Blower Data 20
Approvals And Warranty 3
Dimensions 14
- Furnace/Coil Combined Dimensions 19
- Optional Accessories 15
- Optional Accessories - Venting. 16
- Unit 14
Features 3
Gas Heat Accessories 13
High Altitude Derate 13
Installation Clearances 9
Model Number Identification. 1
Optional Accessories - Order Separately 10
Specifications 9
Vent Lengths 12
Vent Lengths - Exhaust Using Ventilated Attic/Crawlspace Intake Air. 13
Vent Lengths - Uninsulated Exhaust Pipe In Unconditioned Space 11

APPROVALS AND WARRANTY

APPROVALS

- AHRI Certified
- CSA International Certified
- Tested and rated according to US DOE test procedures and FTC labeling regulations
- Units are approved for installations from 0 - 4500 ft.
- ENERGY STAR® certified units are designed to use less energy, help save money on utility bills, and help protect the environment
- ISO 9001 Registered Manufacturing Quality System
- Blower data from unit tests conducted in Lennox Laboratory air test chamber

NOTE - This furnace has not been CSA International design certified for installation in mobile homes, recreational vehicles, or outdoors.

California Only

- These furnaces **do not meet** the South Coast Air Quality Management District (SCAQMD) Rule 1111 and San Joaquin Valley Air Pollution Control District (SJVAPCD) Rule 4905 NOx emission limit (14 ng/J) and cannot be installed within the SCAQMD, SJVAPCD and Bay Area
- These furnaces are approved by the California Energy Commission and meets California Nitrogen Oxides Standard (NOx) limits of 40 ng/J

WARRANTY

- Duralok Plus™ Aluminized Steel Heat Exchanger:
  - Limited lifetime (twenty year transferable) in residential applications
  - Limited ten years in non-residential applications
- All other covered components:
  - Limited five years in residential installations
  - Limited one year in non-residential installations

NOTE - Refer to Lennox® Basic Limited Warrenty at www.Lennox.com for additional details.

FEATURES

APPLICATIONS

- Input capacities of 44,000, 66,000, 88,000 and 110,000 Btuh
- Energy efficiency (AFUE) - up to 96%
- Compact cabinet for downflow applications without any internal modifications to the unit
- Lennox add-on indoor coils, high-efficiency air cleaners and humidifiers can easily be added to furnace
- Shipped factory assembled with controls installed and wired
- Each unit factory test operated to ensure proper operation

HEATING SYSTEM

1 Lennox Duralok Plus™ Heat Exchanger Assembly

- Lennox developed heat exchanger assembly consists of primary heat exchanger and secondary condenser coil assembly
- Main multi-pass crimped seam design clamshell type
- Constructed of heavy-gauge, aluminized steel
- Designed for normal expansion and contraction with maximum efficiency and minimum resistance to air flow

2
- Secondary heat exchanger condenser coil constructed of aluminum fins fitted to stainless steel tubes
- Coil is factory tested for leaks
- Condensate drain header box assembly located on front of coil
- Compact size permits low overall design of furnace cabinet
- Laboratory life cycle tested in excess of industry standards

Lennox Designed Header Box

- Header box on end of condenser coil collects flue condensate for disposal through condensate drains
- Drains are located on each side of the cabinet for easy field installation of condensate drain trap
- Only one drain is used, the other drain is sealed
- Condensate drain trap is included with the unit for field installation

HEATING SYSTEM (continued)

Lennox Designed Flue Condensate Trap Assembly
- Field installed outside the conditioned air stream
- Assembly can be mounted on either side of cabinet
- See Installation Instructions
- 90° street elbow furnished for ease of drain trap installation
- Drain connection can be made with field provided PVC pipe, PVC coupling, or vinyl tubing with hose clamp
- Drain cap on trap allows easy cleaning and winterizing

3 Inshot Burners
- Aluminized steel inshot burners provide efficient, trouble-free operation
- Burner venturi mixes air and gas in correct proportion for proper combustion
- Burner assembly can be removed from the unit as a single component for ease of service

SureLight® Hot Surface Ignitor
- Tough, reliable, long-life, trouble-free performance.
- Silicon nitride ignitor.
- Cemented to steatite block for protection against current leakage.
- Ignition leads are constructed of nickel plated copper and are enclosed in high temperature Teflon® insulation for dependable operation.

4 Two-Stage Gas Control Valve
- 24 volt redundant combination two-stage gas control valve combines manual shut off switch (On-Off), automatic electric valve (dual) and gas pressure regulation into a compact combination control.

5 Two-Speed Combustion Air Inducer
- Permanent split capacitor (PSC), heavy duty blower prepurges heat exchanger and safely vents flue products
- Operates only during heating cycle
- Dual pressure switches (low fire/high fire) prove blower operation before allowing gas valve to open

Flame Rollout Switches (2)
- Factory installed on burner box
- Switch provides protection from abnormal operating conditions
- Manual reset

Limit Control
- Primary limit is accurately located on vestibule panel
- Automatic reset

Optional Accessories

High Altitude Orifice Kits
- Required on all units for proper unit operation at altitudes from 7501 to 10,000 ft.
- Available for natural gas and LPG/propane

High Altitude Pressure Switch Kit
- Required for proper unit operation on installations above 4500 ft.

Natural Gas to LPG/Propane Conversion Kit
- Required for field changeover from natural gas to LPG/Propane

LPG/Propane to Natural Gas Conversion Kit
- Required for field changeover from LPG/Propane to natural gas

DIRECT VENT / NON-DIRECT VENT SEALED COMBUSTION SYSTEM

- Furnace features a “sealed combustion” system and can be installed in either Direct Vent or Non-Direct applications.
- In Direct Vent applications, combustion air is supplied from outdoors and flue gases are discharged outdoors.
- In Non-Direct Vent applications, combustion air is supplied from indoors and flue gases are discharged outdoors.

NOTE - Lennox has approved the use of DuraVent® PolyPro® and Centrotherm InnoFlue® manufactured vent pipe and terminations as an alternative to PVC vent pipe. Must be ordered separately.
Tested and listed to the ULC S636 standard in Canada.
The polypropylene venting system must follow the uninsulated and unconditioned space vent lengths listed in the table on 11.

Refer to the Installation Instructions for additional details.

Flue Coupling
- Assists with exhaust flue piping connection and servicing
- Includes flexible one 2 inch rubber coupling and two adjustable bands
- Approved for all Lennox 90% furnaces

DIRECT VENT / NON-DIRECT VENT SEALED COMBUSTION SYSTEM (continued)

Termination Kits

- Facilitates installation of combustion air intake pipe and flue exhaust pipe
- Refer to venting table in this bulletin to determine pipe size needed and proper termination kit required
- Certain Termination Kits are certified to ULC S636 standard for use in Canada only
- See Optional Accessories table and dimension drawings

Concentric - Direct Vent Applications

- 2 or 3 inch kit contains concentric termination assembly, reducer bushing and 45 degree elbow
- 2 inch kit for -045-070 models contains an outdoor exhaust accelerator
- Kit requires single hole penetration of roof or wall for installation
- Roof Termination Flashing Kit is available for use with 2 inch Kits
- CSA certified

Flush-Mount

- Kit contains flush-mount termination, accelerator, mounting template and hardware
- Kit may be used with 2, 2-1/2 or 3 in. pipe

Wall Assembly
Close Couple (US Only) - Direct Vent Applications

- 2 or 3 inch kit consists of close-couple, side-by-side PVC piping with galvanized steel wall cover plate for sealing and isolating piping penetration of the wall
- Piping spacing and length is sized for proper wall installations
- CSA certified

Close Couple WTK (Canada Only) - Direct Vent Applications

- 2 or 3 inch kit contains one insulated faceplate, one insulated exhaust pipe, elbow and fittings. Certified to ULC S636 standard

NOTE - Maintain a maximum of 6 inches between the inlet and outlet openings in the installation of the pipes.

Roof Termination Flashing Kit

- For vertical venting through a roof
- 2 or 3 inch kit contains two neoprene rubber roof flashings
- Vent pipe and insulation not furnished
- Flashing Kit can also be used with Concentric Vent Termination Kits used in vertical venting rooftop applications

Left Side Vent Kit

- Allows venting out the left side of the cabinet
- Kit contains left vent tube and seal plate

CONTROLS

6 SureLight® Integrated Furnace Control

- Contains all necessary controls and relays to operate furnace
- Combustion air inducer is operated by the integrated furnace control
- Prior to ignition, a pre-purge cycle for 15 seconds is initiated
- After the main burners are turned off, a post-purge cycle for 5 seconds is run
- Safety Controls - Flame sensor utilizes flame rectification for safe and reliable operation
- Should loss of flame occur, the integrated furnace control will initiate 4 re-attempts at ignition before locking out unit operation for 60 minutes
- Watchguard type circuit automatically resets ignition controls after one hour of continuous thermostat demand after unit lockout, eliminating nuisance calls for service
- Thermostat Control - For optimal performance, the use of a high-quality, digital two-stage thermostat with adjustable settings for first stage/second stage, on/off differentials and adjustable stage timers is recommended

Furnace Input Staging Options

Thermostat Type	Input Staging Available
Two-Stage (Conventional)	Determined by thermostat demand
Single-Stage (Conventional)	2nd-stage heat ON delay (DIP switch setting) OFF - 7 minutes (factory) ON - 12 minutes

- Display LED - Seven segment LED displays alpha-numeric information related to diagnostics as well as system operation and status
- Diagnostic codes are held in non-volatile memory, immune from power interruptions
- Holds up to ten diagnostic codes in order of occurrence for recall on demand
- Port on blower door allows for easy viewing

DIP Switch Settings

- Select Thermostat Used - Single-Stage or Two-Stage
- Two selectable second stage recognition times (7 and 12 minutes) are available on the control when the furnace is used with a single-stage thermostat

CONTROLS (continued)

- When used with a two-stage thermostat, furnace will only initiate second stage operation with a second stage thermostat demand
- **Second Stage Delay** - Used with single-stage thermostat only. See Furnace Input Staging Options table for details
- **Blower On/Off Time (Heating)** - Blower on time is fixed at 30 seconds, blower off time is adjustable from 60, 90, 120 and 180 seconds (factory setting - 90 seconds)
- **Blower On/Off Time (Cooling)** - For air-conditioning applications, blower "on" time is 2 seconds following thermostat demand for cooling
- Blower "off" time in cooling mode is adjustable from 2 or 45 seconds (factory setting - 45 seconds)
- For air-conditioning applications, blower is automatically energized on thermostat demand for cooling
- **Heating Speeds** - Low Heat or High Heat
- **Cooling Speeds** - Low Cool or High Cool
- **Continuous Speed** - Low Heat (factory setting) - adjustable
- **Dehumidification** - A jumper on the control must be clipped to enable dehumidification
- A humidity controlling thermostat or device is also required
- During a call for cooling, air volume is automatically reduced, forcing humidity removal by the air conditioner or heat pump system (single stage units or two-stage units running at 2nd stage)
- After the humidity has reached the desired set-point the cooling air volume returns to its designed rate
- **Dual-Fuel Operation** - A jumper on the control must be clipped to enable operation with a single or two-stage heat pump
- The indoor blower is started without delay when a call for heat is received
- **Two-Stage Compressor Operation** - A jumper on the control must be clipped to enable operation with a two-stage compressor
- **Accessory Terminal** - One accessory terminal furnished for additional power supply requirements for 120 volt (less than 1 amp) powered air cleaners
- One un-powered pair of contacts are provided for humidifier connections and may be connected to 24V or 120V
- Control is factory installed in the unit control box

24 Volt Transformer (40VA)

- Furnished and factory installed on outside of control box
- Circuit breaker (furnished) is wired in series

Field Wiring Make-up Box

- Furnished for line voltage wiring
- Factory installed internally on left side of furnace
- Box may be installed internally on right side of furnace

Optional Accessories

E30 Smart Wi-Fi Thermostat

- Wi-Fi enabled, electronic 7-day, universal, multi-stage, programmable, touchscreen thermostat
- 3 Heat/2 Cool
- Auto-changeover
- Controls dehumidification during cooling mode and humidification during heating mode

- Offers enhanced capabilities including humidification / dehumidification / dewpoint measurement and control, Humiditrol® control, and equipment maintenance reminders
- Easy to read 7 in. color touchscreen (measured diagonally)
- LCD display with backlight shows the current and set temperature, time, inside relative humidity, system status (operating mode and schedules) and outside temperature (optional outdoor sensor required)
- Smooth Setback Recovery starts system early to achieve setpoint at start of program period
- Compressor short-cycle protection (5 minutes)
- Up to four separate schedules are available plus Schedule IQ™
- One-Touch Away Mode - A quick and easy way to set the cooling and heating setpoints while away
- Smart Away™ - Uses geo-fencing technology to determine when the homeowner is within a predetermined distance from the home to operate the system when leaving, away and arriving
- Wi-Fi remote monitoring and adjustment through a home wireless network for desktop PCs, laptops and apps for smartphones or tablets
- Smart home automation compatible with Apple HomeKit™, Amazon Alexa®, Google Assistant and IFTTT
- Service Dashboard features online real-time monitoring of installed Lennox® Communicating systems
- High Definition Color Display and Subbase, Smart Hub Controller, wallplate (for retrofit installations) furnished for easy installation
- See the Lennox® E30 Smart Wi-Fi Thermostat Product Specifications bulletin for more information

Remote Outdoor Temperature Sensor

- Used with Lennox® E30 Smart Thermostat
- When installed outdoors, sensor allows thermostat to display outdoor temperature

NOTE - Sensor is required for Enhanced Dehumidification Control (EDA) applications.

NOTE - The outdoor sensor is furnished as standard with Lennox® Communicating outdoor units, optional for conventional units.

Thermostat

- Thermostat is not furnished with unit
- See Lennox Price Book for selection

CONTROLS (continued)

Optional Accessories (continued)

Furnace Twinning Panel
- Required to operate two identical furnaces simultaneously from a single thermostat
- For single stage conventional (1 heat/1 cool), multi-stage conventional (2 heat/2 cool) and heat pump (3 heat/2 cool) equipment
- Can be used with common or separate ducted systems
- Contains PC Control Board with terminal strip connections for thermostat and HVAC equipment
- LEDs indicate system operating status
- Uses standard 18-gauge thermostat wire
- Power Supply: 24 VAC, 40VA (transformer not furnished)
- Mounting base with hardware furnished
- Dimensions (H x W x D): 10 x 5 x 2 in.

NOTE - Only identical furnaces should be twinned in order to ensure that both furnace blowers start at the same time. If furnaces are not identical, back draft dampers can be installed in either the supply or return duct.

Up to four identical furnaces can be twinned. Requires two panels that are wired together.

Furnace Twinning Kit
- Required to operate two furnaces simultaneously.
- Kit consists of twinning relays, quick connect terminals and mounting hardware
- Used for two-stage heating/single-stage cooling with either a single-stage or two-stage thermostat

Transformer (75VA)
- Recommended when furnace is used with zoning or defrost thermostats and other 24V accessories requiring a higher VA rating
- Circuit breaker (furnished) is wired in series
- Replaces the standard 40VA transformer

Blower Relay Kit
- For use with two-stage outdoor units
- Allows furnace blower speed changes when matched with two-stage air conditioners or heat pumps

BLOWER

- Direct drive blower
- Statically and dynamically balanced
- Resiliently mounted
- Blower assembly easily removed for servicing

7 Power Saver™ Constant Torque Blower Motor
- DC Brushless Motor
- High Efficiency Constant Torque
- ECM (Electronically Commutated Motor)
- Motor is programmed to provide constant torque at each of the selectable speeds
- Motor is controlled by the SureLight® Integrated Furnace Control
- Blower speeds are easily changed on the integrated furnace control. See Blower Data tables

CABINET

- Low-profile, narrow width allows easy installation
- Heavy-gauge, cold rolled steel construction
- Pre-painted cabinet finish
- Flanges provided on supply air opening for ease of plenum connection or alignment with indoor coil
- 8 Insulated with foil faced insulation on sides and back of heating compartment and mat faced insulation in blower compartment.
- Sealed blower compartment
- Inner blower compartment access panel seals blower compartment from air leakage
- Cabinet door can be removed without any tools
- Complete service access
- 9 Safety interlock switch automatically shuts off power to unit when blower compartment access door is removed
- 10 Gas piping and electrical inlets are provided in both sides of cabinet

Coil Match-Up
- All Lennox downflow indoor coils will physically match the furnace **supply air opening** with the same letter designation (A, B, C, D) as in the furnace model number

Low Leakage Cabinet
- All models have less than 2% air leakage and meet ANSI/ASHRAE Standard 193-2010 “Method of Test for Determining the Air Tightness of HVAC Equipment”

CABINET (continued)

Optional Accessories

Condensate Drain Heat Cable Kits
- Self-limiting wattage heat cable prevents condensate drain from freezing in unconditioned areas
- Available in 6 or 24 ft. lengths

Crawl Space Vent Drain Kit
- Allows venting through a crawl space for downflow applications
- Includes 2 or 3 in. sanitary tee, 2 in. PVC assembly, PVC boot and clamp
- Kit for Canada is certified to ULC S636

Downflow Combustible Flooring Base
- Required for heating only units installed on combustible floors
- Not required in add-on cooling applications
- See Dimension Drawing

FILTER (not furnished)

- Filter and provisions for external mounting must be field provided

Optional Accessories

Downflow Filter Cabinet
- Filter cabinet mounts directly on top of furnace
- "B and "C" width cabinets have two filters
- Filter rails are furnished
- Front access for servicing
- Cleanable filter(s) are furnished

REFRIGERATION DETECTION SYSTEM (RDS)

Optional Accessories

Refrigerant Detection System (RDS) Coil Sensor Kit
- Complies with UL 60335-2-40 approved standard
- Required for field installation for all systems using R-454B refrigerant if sensor is not furnished with coil
- Consists of Refrigerant Detection System (RDS) sensor, lineset sleeves, mounting brackets and A2L labeling
- Sensor ensures safe operation for systems equipped with R-454B refrigerant
- Sensor will detect anu R-454B refrigerant

Refrigerant Detection System (RDS) Blower Control Board

Communicating Blower Control Board (Universal)
- Communicating Blower Control Board and Sensor can be used universally with any Lennox® communicating furnace or any non-communicating 24 volt furnace

Non-Communicating Blower Control Board
- Non-Communicating Blower Control Board and Sensor can be used with any non-communicating 24 volt furnace

Standard Features
- Complies with UL 60335-2-40 approved standard
- Required for all systems using R-454B refrigerant
- Connects to the RDS sensor furnished with the RDS Coil Sensor Kit
- Supports up to two RDS Sensors (factory setting)
- Used as an interface between indoor unit and thermostat to control system
- Ensures safe operation for systems equipped with R-454B refrigerant
- If R-454B refrigerant is detected, the refrigerant detection system will stop compressor and/or heating operating and operate the blower to reduce concentrations in the conditioned space
- Once safe levels are reached the HVAC system will resume normal operation
- Multi-color LED for system status and as an aid in troubleshooting
  - Flashing LED codes for system status (Green/Blue) and diagnosing Sensor errors (Red)
- Alarm relay can trigger an external alarm if R-454B refrigerant is detected
- Zone relay opens all zone dampers (if part of a zoning system) if R-454B refrigerant is detected
- Power is disabled to non-communicating thermostats to prevent demand if R-454B refrigerant is detected
- On system start-up blower will run for five minutes and any thermostat demands are disabled
- Dimensions (H x W x D): 7-7/16 x 7-7/16 x 2-1/2 (189 x 189 x 127 mm)

NOTE - See Refrigerant Detection System (RDS) Components Table on page 13.

See the CK40 Indoor Coil Product Specifications bulletins for more information.

Refer to the Installation Instructions for additional information.

SPECIFICATIONS

Gas Heating Performance		**Model No.**	**EL296DF045XE36B**	**EL296DF070XE48B**	**EL296DF090XE48C**	**EL296DF110XE60C**
		AHRI Ref. No.	5625722	5625723	5940633	5625725
		[1] AFUE	96%	96%	96%	96%
	High Fire	Input - Btuh	44,000	66,000	88,000	110,000
		Output - Btuh	43,000	64,000	85,000	106,000
		Temperature rise range - °F	35-65	35-65	40-70	45-75
		Gas Manifold Pressure (in. w.g.) Nat. Gas / LPG/Propane	3.5 / 10.0	3.5 / 10.0	3.5 / 10.0	3.5 / 10.0
	Low Fire	Input - Btuh	29,000	43,000	57,000	72,000
		Output - Btuh	28,000	42,000	55,000	70,000
		Temperature rise range - °F	20 - 50	25 - 55	30 - 60	35 - 65
		Gas Manifold Pressure (in. w.g.) Nat. Gas / LPG/Propane	1.7 / 4.5	1.7 / 4.5	1.7 / 4.5	1.7 / 4.5
High static - in. w.g.			0.5	0.5	0.5	0.5
Connections in.		Intake / Exhaust Pipe (PVC)	2 / 2	2 / 2	2 / 2	2 / 2
		Gas pipe size IPS	1/2	1/2	1/2	1/2
		Condensate Drain Trap (PVC pipe) - i.d.	3/4	3/4	3/4	3/4
		with furnished 90° street elbow	3/4 slip x 3/4 Mipt	3/4 slip x 3/4 Mipt	3/4 slip x 3/4 Mipt	3/4 slip x 3/4 Mipt
		with field supplied (PVC coupling) - o.d.	3/4 slip x 3/4 MPT	3/4 slip x 3/4 MPT	3/4 slip x 3/4 MPT	3/4 slip x 3/4 MPT
Indoor Blower		Wheel nom. diameter x width - in.	10 x 8	11-1/2 x 10	10 x 10	11 x 11
		Motor Type	DC Brushless	DC Brushless	DC Brushless	DC Brushless
		Motor output - hp	1/2	3/4	3/4	1
		Tons of add-on cooling	1.5 - 3	2 - 4	2 - 4	3 - 5
		Air Volume Range - cfm	485 - 1395	520 - 1770	760 - 1765	1045 - 2285
Electrical Data		Voltage	120 volts - 60 hertz - 1 phase			
		Blower motor full load amps	6.8	8.4	8.4	10.9
		Maximum overcurrent protection	15	15	15	15
Shipping Data		lbs. - 1 package	134	145	163	175

NOTE - Filters and provisions for mounting are not furnished and must be field provided.

[1] Annual Fuel Utilization Efficiency based on DOE test procedures and according to FTC labeling regulations. Isolated combustion system rating for non-weatherized furnaces.

INSTALLATION CLEARANCES

Sides	[1] 0 inches (0 mm)
Rear	0 inches (0 mm)
Top/Plenum	1 inch (25 mm)
Front	0 inches (0 mm)
Front (service/alcove)	24 inches (610 mm)
Floor	[2] Combustible

NOTE - Air for combustion must conform to the methods outlined in the National Fuel Gas Code (NFPA 54/ ANSI-Z223.1) or the National Standard of Canada CAN/CSA-B149.1 “Natural Gas and Propane Installation Code”.

NOTE - In the U.S. flue sizing must conform to the methods outlined in the current National Fuel Gas Code (NFPA 54/ANSI-Z223.1) or applicable provisions of local building codes. In Canada flue sizing must conform to the methods outlined in National Standard of Canada CAN/CSA-B149.1.

[1] Allow proper clearances to accommodate condensate trap and vent pipe installation.

2 Clearance for installation on combustible floor if Optional Downflow Combustible Flooring Base is installed between furnace and combustible floor. Not required in add-on cooling applications if installed in accordance with local codes or National Fuel Gas Code ANSI-Z223.1 or CAN/CGA-149.1,.2. Do not install the furnace directly on carpeting, tile, or other combustible materials other than wood flooring.

OPTIONAL ACCESSORIES - ORDER SEPARATELY

			"B" Width Models	"C" Width Models
CABINET ACCESSORIES				
Downflow Combustible Flooring Base			**11M60**	**11M61**
CONTROLS				
Blower Relay Kit (for two-stage outdoor units)			**85W66**	**85W66**
Furnace Twinning Panel			**Y3653**	**Y3653**
Furnace Twinning Kit			**16W72**	**16W72**
Transformer (75VA)			**27J32**	**27J32**
E30 Smart Wi-Fi Thermostat			**20A65**	**20A65**
Remote Outdoor Temperature Sensor			**X2658**	**X2658**
CONDENSATE DRAIN KITS				
Condensate Drain Heat Cable		6 ft.	**26K68**	**26K68**
		24 ft.	**26K69**	**26K69**
Crawl Space Vent Drain Kit		US	**51W18**	**51W18**
		Canada	**15Z70**	**15Z70**
FILTERS				
[1] **Downflow Filter Cabinet**			**51W07**	**51W08**
		No. and Size of filter - in.	(2) 16 x 20 x 1	(2) 16 x 20 x 1
TERMINATION KITS				
See Installation Instructions for specific venting information.				
Direct Vent	Concentric	US - 2 in.	**71M80**	**69M29**
		3 in.	**- - -**	**60L46**
		Canada - 2 in.	**44W92**	**44W92**
		3 in.	**- - -**	**44W93**
	Flush-Mount	US - 2, 2-1/2 or 3 in.	**51W11**	**51W11**
		Canada - 2, 2-1/2 or 3 in.	**51W12**	**51W12**
	Wall - Close Couple	US - 2 in.	**22G44**	**- - -**
		3 in.	**44J40**	**44J40**
	Wall - Close Couple WTK	Canada - 2 in.	**30G28**	**- - -**
		3 in.	**81J20**	**81J20**
	Roof Termination Flashing Kit (no vent pipe - 2 flashings)	2 in.	**15F75**	**15F75**
		3 in.	**44J41**	**44J41**
VENTING				
Flue Coupling		2 in.	**17H92**	**17H92**
[2] **Left Side Vent Kit**		2 or 3 in.	**87W73**	**87W73**

[1] Cleanable polyurethane, frame-type filter.

[2] NOTE - The curved exhaust pipe furnished with the Left Side Vent Kit counts as one additional 2 in. diameter 90° elbow. When using 3 in. diameter pipe, the furnished curved exhaust pipe and field provided fittings to transition from 2 in. to 3 in. count as 20 feet of equivalent pipe on all units.

NOTE - Termination Kits (**44W92**, **44W93**, **30G28**, **51W12**, **81J20**) and Crawl Space Vent Drain Kit (**15Z70**) are certified to ULC S636 standard for use in Canada only.

OUTDOOR TERMINATION KIT USAGE

Input Size	Vent Pipe Diameter (in.)	Standard Terminations				Concentric Terminations		
		Flush Mount Kit	Wall Kit		Field Fabricated Exhaust Accelerator Size Required	Concentric Kit		
			2 inch	3 inch		1-1/2 inch	2 inch	3 inch
		51W11 (US) [5] 51W12 (CA)	22G44 (US) [5] 30G28 (CA)	44J40 (US) [5] 81J20 (CA)		71M80 (US) [5] 44W92 (CA)	69M29 (US) [5] 44W92 (CA)	60L46 (US) [5] 44W93 (CA)
045	[1] 1-1/2	[4] YES	YES	[2] YES	1-1/2 in.	[3] YES	- - -	- - -
	2	[4] YES	YES	[2] YES	1-1/2 in.	[3] YES	- - -	- - -
	2-1/2	[4] YES	YES	[2] YES	1-1/2 in.	[3] YES	- - -	- - -
	3	[4] YES	YES	[2] YES	1-1/2 in.	[3] YES	- - -	- - -
070	[1] 1-1/2	[4] YES	YES	[2] YES	1-1/2 in.	[3] YES	- - -	- - -
	2	[4] YES	YES	[2] YES	1-1/2 in.	[3] YES	- - -	- - -
	2-1/2	[4] YES	YES	[2] YES	1-1/2 in.	[3] YES	- - -	- - -
	3	[4] YES	YES	[2] YES	1-1/2 in.	[3] YES	- - -	- - -
090	2	[4] YES	- - -	YES	2 in.	- - -	YES	YES
	2-1/2	[4] YES	- - -	YES	2 in.	- - -	YES	YES
	3	[4] YES	- - -	YES	2 in.	- - -	YES	YES
110	2	YES	- - -	YES	2 in.	- - -	YES	YES
	2-1/2	YES	- - -	YES	2 in.	- - -	YES	YES
	3	YES	- - -	YES	2 in.	- - -	YES	YES

NOTE - Standard Terminations do not include any vent pipe or elbows external to the structure.
Any vent pipe or elbows external to the structure must be included in total vent length calculations. See Vent Length Tables.

[1] 2 inch to 1-1/2 inch reducer required, must be field provided.

[2] Requires field provided 1-1/2 in. outdoor exhaust accelerator.

[3] Concentric Kits **71M80** and **44W92** include 1-1/2 in. outdoor exhaust accelerator, required when used with 045 and 070 input models. Accelerator is not used with 090, 110, 135 input models. When using 1-1/2 in. piping, the pipe must be transitioned to 2 in. pipe when used with the Concentric Kit.

[4] Flush Mount Kit **51W11** and **51W12** includes 1-1/2 in. outdoor exhaust accelerator, required when used with 045, 070 and 090 input models. Accelerator is not used with 110 or 135 input models. When using 1-1/2 in. piping, the pipe must be transitioned to 2 in. pipe when used with the Flush Mount Kit.

[5] Termination Kits **30G28**, **44W92**, **44W93**, **51W12** and **81J20** are certified to ULC S636 standard for use in Canada only.

VENT LENGTHS - UNINSULATED EXHAUST PIPE IN UNCONDITIONED SPACE

[1] Winter Design Temperatures	Vent Pipe Diameter	Unit Input Size							
		045		070		090		110	
		[2] Maximum Uninsulated Exhaust Vent Length (ft.)							
		PVC	PolyPro InnoFlue	PVC	PolyPro InnoFlue	PVC	PolyPro InnoFlue	PVC	PolyPro InnoFlue
32 to 21°F	1-1/2 in.	22	N/A	20	N/A	N/A	N/A	N/A	N/A
	2 in.	21	18	33	30	46	42	30	30
	2-1/2 in.	16	N/A	26	N/A	37	N/A	36	N/A
	3 in.	12	12	21	21	30	30	29	29
20 to 1°F	1-1/2 in.	12	N/A	20	N/A	N/A	N/A	N/A	N/A
	2 in.	11	9	19	17	28	25	27	24
	2-1/2 in.	7	N/A	14	N/A	21	N/A	20	N/A
	3 in.	N/A	N/A	9	9	16	16	14	14
0 to –20°F	1-1/2 in.	8	N/A	13	N/A	N/A	N/A	N/A	N/A
	2 in.	6	4	12	10	19	16	18	15
	2-1/2 in.	N/A	N/A	7	N/A	13	N/A	12	N/A
	3 in.	N/A	N/A	N/A	N/A	8	8	7	7

NOTE - Concentric terminations are equivalent to 5 ft. of straight pipe and should be included when measuring total pipe length.

NOTE - Each elbow is equivalent to 5 ft. of straight pipe and should be included when measuring total pipe length.

[1] Refer to 99% Minimum Design Temperature table provided in the current edition of ASHRAE Handbook-Fundamentals.

[2] Maximum Equivalent Vent Length permitted is defined as Total Length (linear feet) of vent pipe, plus equivalent length (ft.) of fittings, plus equivalent length (ft.) of termination.

VENTING NOTES - Concentric Terminations are equivalent to 5 ft. of straight pipe and should be included when measuring total pipe length.
One 90° elbow is equivalent to 5 feet of straight vent pipe.
Two 45° elbows are equal to one 90° elbow.
One 45° elbow is equivalent to 2.5 feet of straight vent pipe.

PolyPro® poly-propylene vent pipe is a registered trademark of DuraVent®.

Innoflue® is a registered trademark of Centrotherm Eco Systems.

VENT LENGTHS

STANDARD TERMINATION AT ELEVATION 0 - 4500 ft.

Pipe Size		1-1/2 in.				2 in.				2-1/2 in.				3 in.			
	Input	045	070	090	110	045	070	090	110	045	070	090	110	045	070	090	110
No. of 90 ELL	1	20	15	N/A	N/A	71	56	34	14	105	105	83	48	128	127	108	108
	2	15	10	N/A	N/A	66	51	29	9	100	100	78	43	123	122	103	103
	3	10	N/A	N/A	N/A	61	46	24	4	95	95	73	38	118	117	98	98
	4	N/A	N/A	N/A	N/A	56	41	19	N/A	90	90	68	33	113	112	93	93
	5	N/A	N/A	N/A	N/A	51	36	14	N/A	85	85	63	28	108	107	88	88
	6	N/A	N/A	N/A	N/A	46	31	9	N/A	80	80	58	23	101	102	83	83
	7	N/A	N/A	N/A	N/A	41	26	4	N/A	75	75	53	18	98	97	78	78
	8	N/A	N/A	N/A	N/A	36	21	N/A	N/A	70	70	48	13	93	92	73	73
	9	N/A	N/A	N/A	N/A	31	16	N/A	N/A	65	65	43	8	88	87	68	68
	10	N/A	N/A	N/A	N/A	26	11	N/A	N/A	60	60	38	3	83	82	63	63

STANDARD TERMINATION ELEVATION 4501 - 10,000 ft.

Pipe Size		1-1/2 in.				2 in.				2-1/2 in.				3 in.			
	Input	045	070	090	110	045	070	090	110	045	070	090	110	045	070	090	110
No. of 90 ELL	1	20	15	N/A	N/A	71	56	34	N/A	105	105	83	48	128	127	108	108
	2	15	10	N/A	N/A	66	51	29	N/A	100	100	78	43	123	122	103	103
	3	10	N/A	N/A	N/A	61	46	24	N/A	95	95	73	38	118	117	98	98
	4	N/A	N/A	N/A	N/A	56	41	19	N/A	90	90	68	33	113	112	93	93
	5	N/A	N/A	N/A	N/A	51	36	14	N/A	85	85	63	28	108	107	88	88
	6	N/A	N/A	N/A	N/A	46	31	9	N/A	80	80	58	23	103	102	83	83
	7	N/A	N/A	N/A	N/A	41	26	4	N/A	75	75	53	18	98	97	78	78
	8	N/A	N/A	N/A	N/A	36	21	N/A	N/A	70	70	48	13	93	92	73	73
	9	N/A	N/A	N/A	N/A	31	16	N/A	N/A	65	65	43	8	88	87	68	68
	10	N/A	N/A	N/A	N/A	26	11	N/A	N/A	60	60	38	3	83	82	63	63

CONCENTRIC TERMINATION AT ELEVATION 0 - 4500 ft.

Pipe Size		1-1/2 in.				2 in.				2-1/2 in.				3 in.			
	Input	045	070	090	110	045	070	090	110	045	070	090	110	045	070	090	110
No. of 90 ELL	1	15	10	N/A	N/A	63	48	32	12	95	95	79	44	111	111	104	104
	2	10	N/A	N/A	N/A	58	43	27	7	90	90	74	39	106	106	99	99
	3	N/A	N/A	N/A	N/A	53	38	22	2	85	85	69	34	101	91	94	94
	4	N/A	N/A	N/A	N/A	48	33	17	N/A	80	80	64	29	96	96	89	89
	5	N/A	N/A	N/A	N/A	43	28	12	N/A	75	75	59	24	91	91	84	84
	6	N/A	N/A	N/A	N/A	38	23	7	N/A	70	70	54	19	96	86	79	79
	7	N/A	N/A	N/A	N/A	33	18	2	N/A	65	65	49	14	81	81	74	74
	8	N/A	N/A	N/A	N/A	28	13	N/A	N/A	60	60	44	9	76	76	69	69
	9	N/A	N/A	N/A	N/A	23	8	N/A	N/A	55	55	39	4	71	71	64	64
	10	N/A	N/A	N/A	N/A	18	3	N/A	N/A	50	50	34	N/A	66	66	59	59

CONCENTRIC TERMINATION ELEVATION 4501 - 10,000 ft.

Pipe Size		1-1/2 in.				2 in.				2-1/2 in.				3 in.			
	Input	045	070	090	110	045	070	090	110	045	070	090	110	045	070	090	110
No. of 90 ELL	1	15	10	N/A	N/A	63	48	32	N/A	95	95	79	44	111	111	104	94
	2	10	N/A	N/A	N/A	58	43	27	N/A	90	90	74	39	106	106	99	99
	3	N/A	N/A	N/A	N/A	53	38	22	N/A	85	85	69	34	101	101	94	94
	4	N/A	N/A	N/A	N/A	48	33	17	N/A	80	80	64	29	96	96	89	89
	5	N/A	N/A	N/A	N/A	43	28	12	N/A	75	75	59	24	91	91	84	84
	6	N/A	N/A	N/A	N/A	38	23	7	N/A	70	70	54	19	86	86	79	79
	7	N/A	N/A	N/A	N/A	33	18	2	N/A	65	65	49	14	81	81	74	74
	8	N/A	N/A	N/A	N/A	28	13	N/A	N/A	60	60	44	9	76	76	69	69
	9	N/A	N/A	N/A	N/A	23	8	N/A	N/A	55	55	39	4	71	71	64	64
	10	N/A	N/A	N/A	N/A	18	3	N/A	N/A	50	50	34	N/A	66	66	59	59

VENT LENGTHS - EXHAUST USING VENTILATED ATTIC/CRAWLSPACE INTAKE AIR

STANDARD TERMINATION AT ELEVATION 0 - 10,000 ft.

	Pipe Size	1-1/2 in.				2 in.				2-1/2 in.				3 in.			
	Input	045	070	090	110	045	070	090	110	045	070	090	110	045	070	090	110
No. of 90 ELL	1	15	10	N/A	N/A	61	46	24	4	90	90	68	33	108	107	88	88
	2	10	N/A	N/A	N/A	56	41	19	N/A	85	85	63	28	103	102	83	83
	3	N/A	N/A	N/A	N/A	51	36	14	N/A	80	80	58	23	98	97	78	78
	4	N/A	N/A	N/A	N/A	46	31	9	N/A	85	75	63	18	93	92	73	73
	5	N/A	N/A	N/A	N/A	41	26	4	N/A	70	70	48	13	88	87	68	68
	6	N/A	N/A	N/A	N/A	36	21	N/A	N/A	65	65	43	8	83	82	63	63
	7	N/A	N/A	N/A	N/A	31	16	N/A	N/A	60	60	38	3	78	77	58	58
	8	N/A	N/A	N/A	N/A	26	11	N/A	N/A	55	55	33	N/A	73	72	53	53
	9	N/A	N/A	N/A	N/A	21	6	N/A	N/A	50	50	28	N/A	68	67	48	48
	10	N/A	N/A	N/A	N/A	16	1	N/A	N/A	45	45	23	N/A	63	62	43	43

GAS HEAT ACCESSORIES

Input	High Altitude Pressure Switch Kit		Natural Gas to LPG/Propane Kit	LPG/Propane to Natural Gas Kit	Natural Gas High Altitude Orifice Kit	LPG/Propane High Altitude Orifice Kit
	4501 - 7500 ft.	7501 - 10,000 ft.	0 - 7500 ft.	0 - 7500 ft.	7501- 10,000 ft.	7501- 10,000 ft.
045	14A47	14A50	11K51	77W09	73W37	11K46
070	14A55	14A56	11K51	77W09	73W37	11K46
090	14A54	14A53	11K51	77W09	73W37	11K46
110	14A46	14A51	11K51	77W09	73W37	11K46

REFRIGERANT DETECTION SYSTEM (RDS) COMPONENTS

Description		Order No.
Refrigerant Detection System (RDS) Coil Sensor Kit		26Z69
Refrigerant Detection System (RDS) Blower Control Board	Any Lennox® Communicating Furnace or any Non-Communicating 24V Furnace (Universal)	27A03
	Any Non-Communicating 24V Furnace	27A02

NOTE - Communicating Blower Control Board and Sensor can be used universally with Lennox® communicating furnace or any non-communicating 24 volt furnace.
Non-Communicating Blower Control Board and Sensor can be used with any non-communicating 24 volt furnace.

HIGH ALTITUDE DERATE

NOTE - Units may be installed at altitudes up to 10,000 ft.
At altitudes above 4501 ft. the unit must be derated to match the manifold pressure information shown below.
Units installed at altitudes of 4501 to 10,000 ft. require a pressure switch change.
Units installed at altitudes of 7501 to 10,000 ft. require an orifice change.
See the Gas Heat Accessories table for ordering information.

NOTE - This is the only permissible derate for these units.

NOTE - In Canada, certification for installations at elevations over 4500 feet is the jurisdiction of local authorities.

Input	Gas	Manifold Pressure in. w.g.										Supply Line Pressure in. w.g. 0 - 10,000 ft.	
		0 - 4500 ft.		4501 - 5500 ft.		5501 - 6500 ft.		6501 - 7500 ft.		7501 - 10,000 ft.			
		Low Fire	High Fire	Low Fire	High Fire	Low Fire	High Fire	Low Fire	High Fire	Low Fire	High Fire	Min.	Max.
All Sizes	Natural	1.7	3.5	1.6	3.3	1.5	3.2	1.5	3.1	1.7	3.5	4.5	13.0
	LPG/Propane	4.5	10.0	4.2	9.4	4.0	9.1	3.9	8.9	4.5	10.0	11.0	13.0

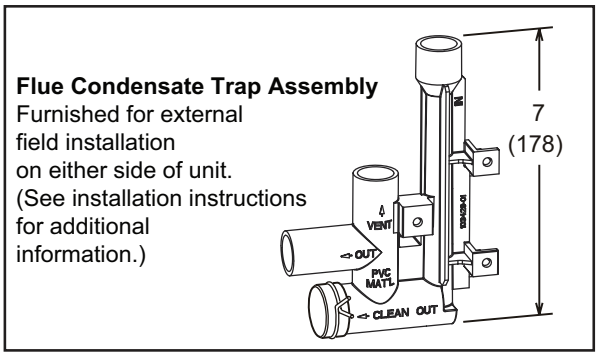

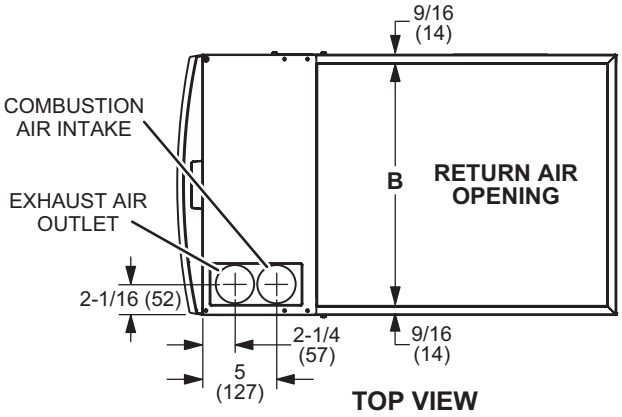

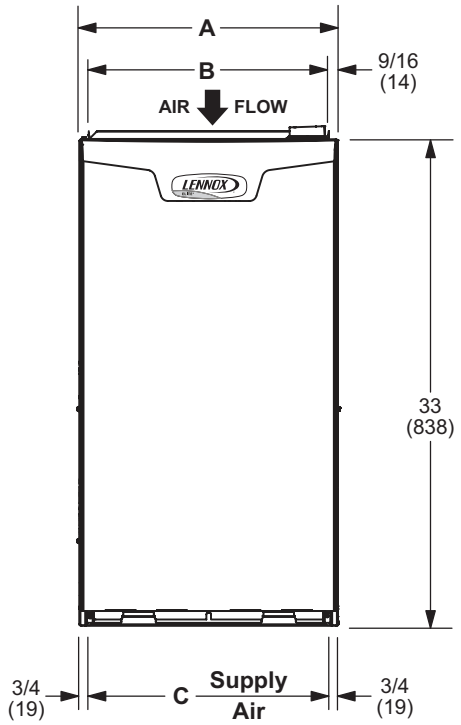

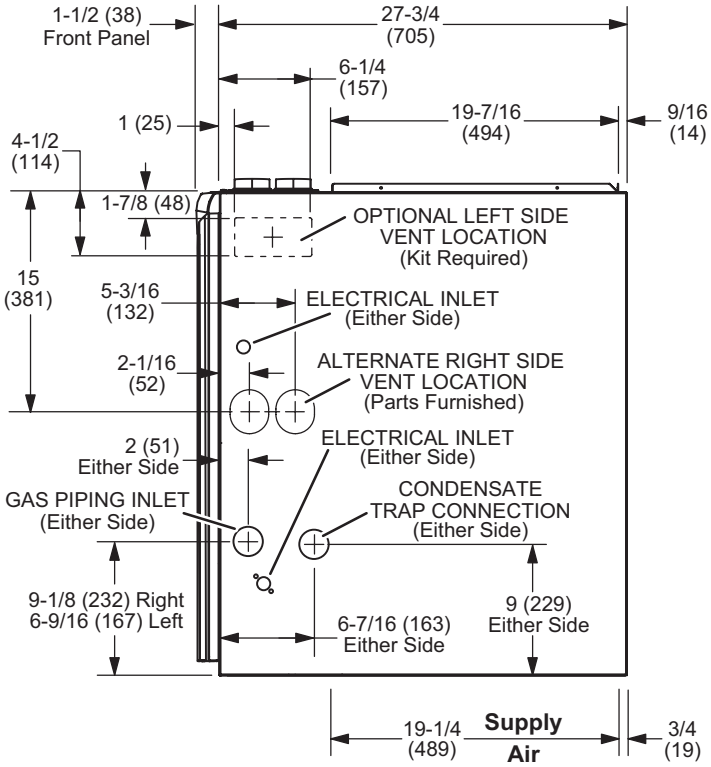

Model No.	A		B		C	
	in.	mm	in.	mm	in.	mm
EL296DF045XE36B EL296DF070XE48B	17-1/2	446	16-3/8	416	16	406
EL296DF090XE48C EL296DF110XE60C	21	533	19-7/8	505	19-1/2	495

DOWNFLOW FILTER CABINET

"B AND "C" WIDTH FURNACES
(Two Filters)

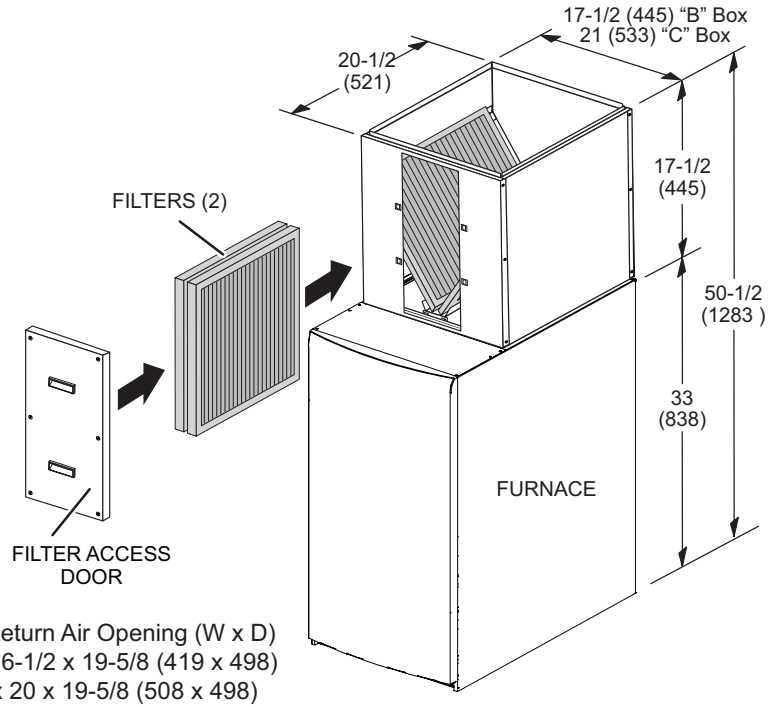

NOTE: Return Air Opening (W x D)
"B" Box 16-1/2 x 19-5/8 (419 x 498)
"C" Box 20 x 19-5/8 (508 x 498)

DOWNFLOW COMBUSTIBLE FLOORING BASE

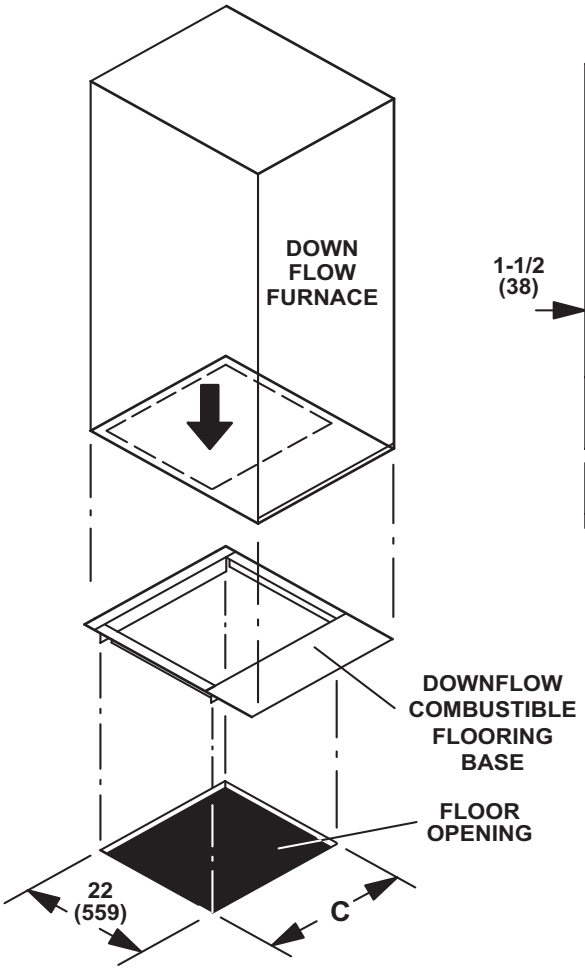

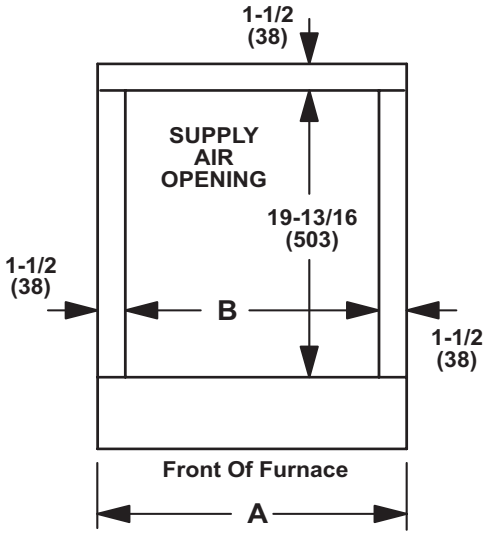

TOP VIEW

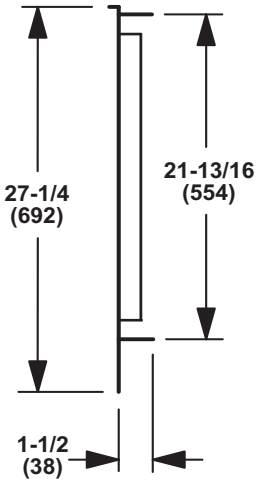

SIDE VIEW

Cabinet Width	Catalog Number	A		B		C	
		in.	mm	in.	mm	in.	mm
B	11M60	19-9/16	497	16-9/16	421	18-3/4	476
C	11M61	23-1/16	586	20-1/16	510	22-1/4	565

FLUSH-MOUNT VENT TERMINATION KIT 51W11 (US) or 51W12 (CANADA)

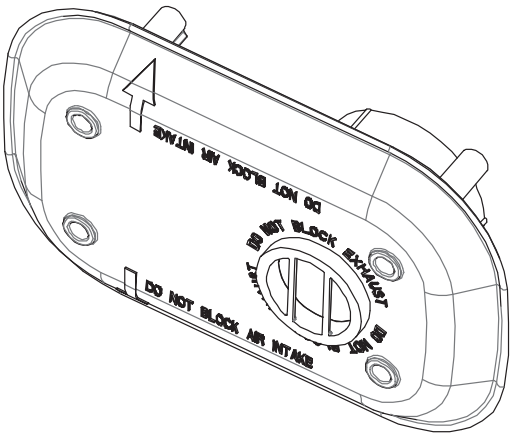

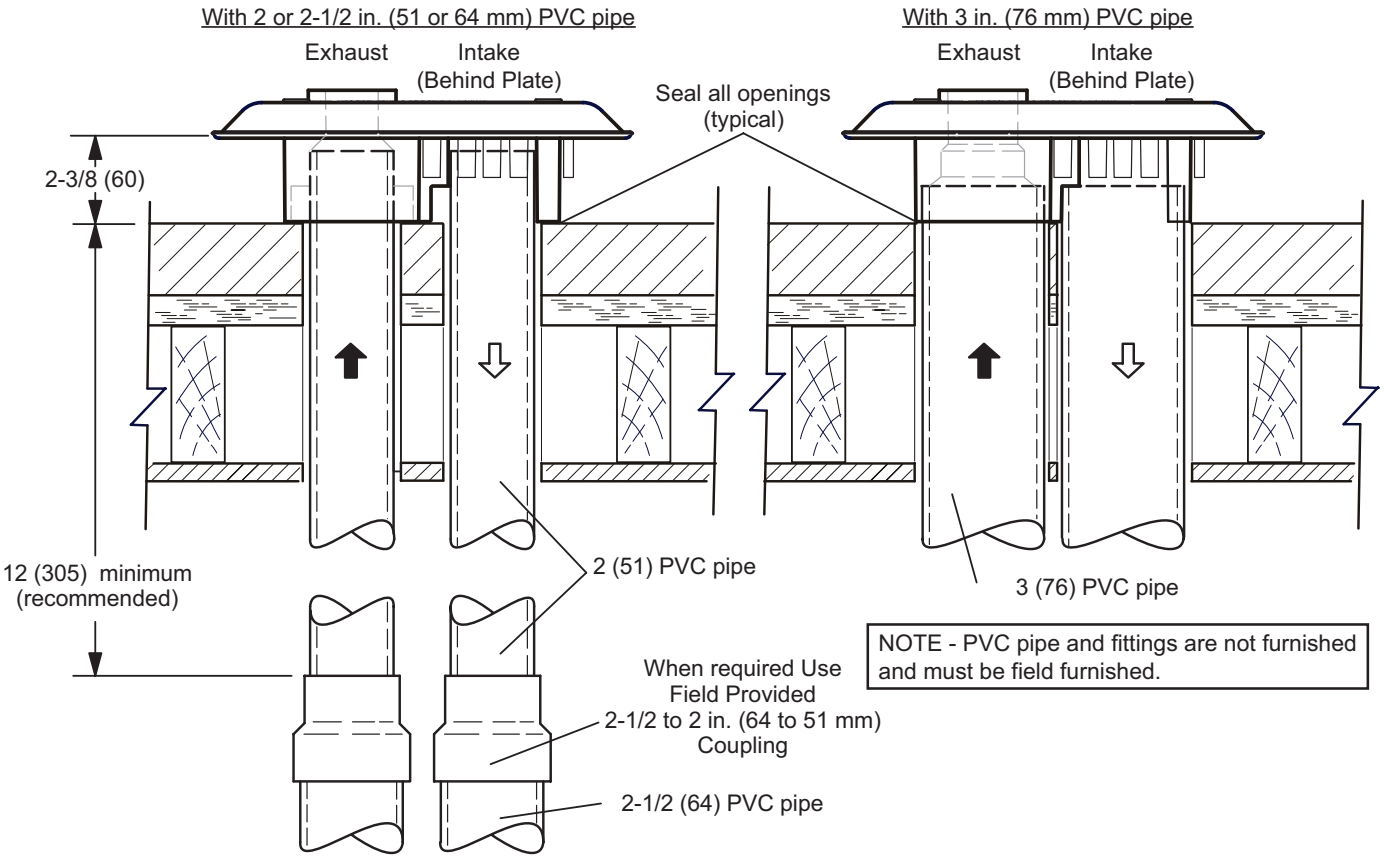

NOTE - PVC pipe and fittings are not furnished and must be field furnished.

CONCENTRIC WALL TERMINATION APPLICATIONS

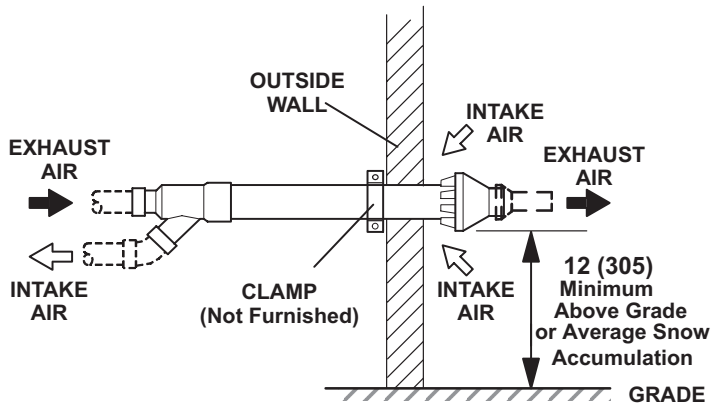

CONCENTRIC ROOF TERMINATION APPLICATIONS

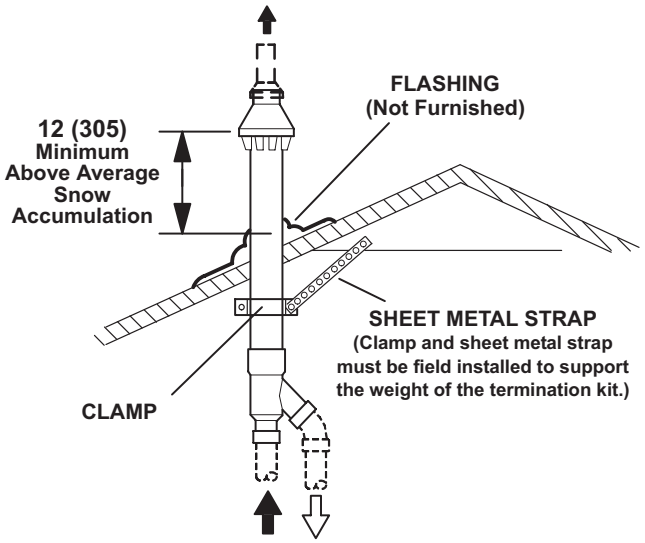

71M80 / 69M29 / 44W92 − 2 inch kits
60L46 / 44W93 − 3 inch kits
See Installation Instructions for additional information.

Note - Field provided reducer may be required to adapt different vent pipe sizes to termination.

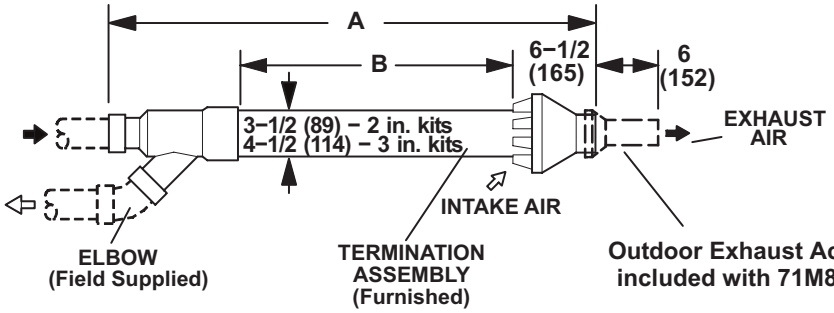

Cat. No.	A		B	
	in.	mm	in.	mm
71M80 69M29	33−3/8	848	16−3/4	425
44W92 (Canada)	29	737	15−1/2	394
60L46	38−7/8	987	21−3/16	538
44W93 (Canada)	36−1/8	918	19−1/2	495

NOTE − Typical illustration for dimensions only. Design may vary depending on kit ordered.

WALL TERMINATION KITS (CLOSE-COUPLE)
EXTENDED VENT FOR GRADE CLEARANCE
2 inch (51 mm) 22G44 (US)
3 inch (76 mm) 44J40 (US)
See Installation Instructions for additional information.

Note - Field provided reducer may be required to adapt different vent pipe sizes to termination.

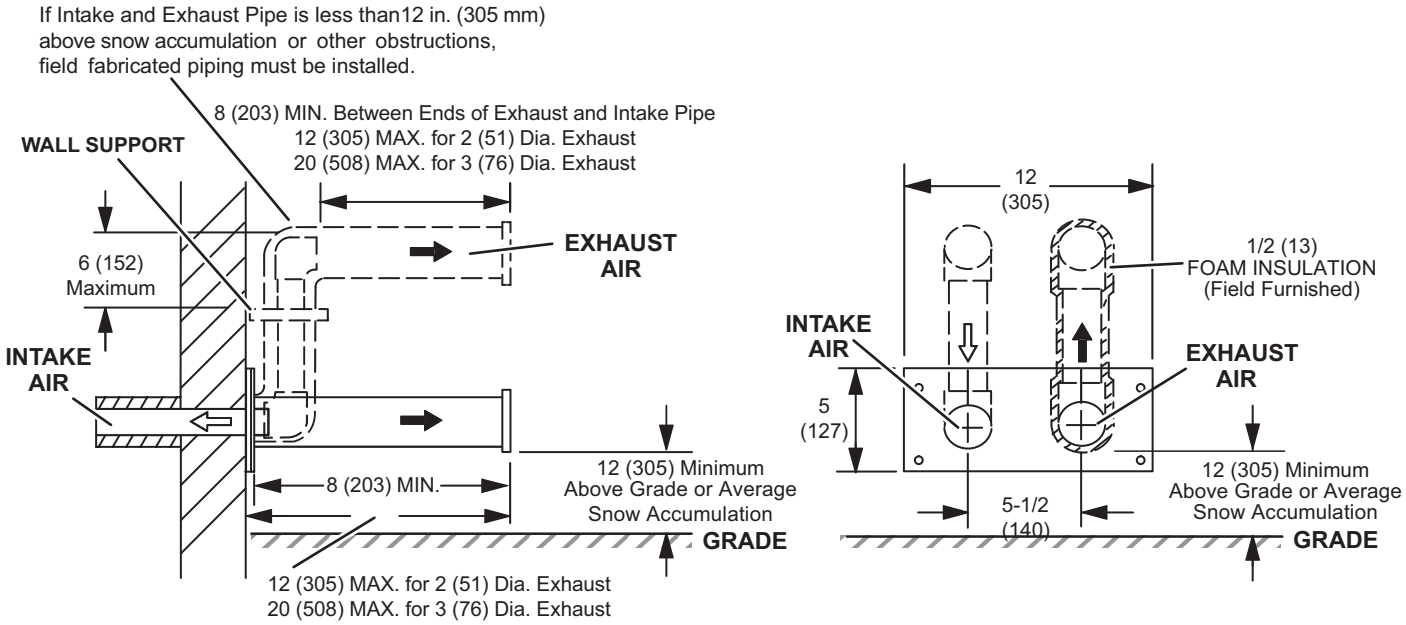

WALL TERMINATION KITS (CLOSE-COUPLE)
EXTENDED VENT FOR GRADE CLEARANCE
2 inch (51 mm) 30G28 (WTK Canada)
3 inch (76 mm) 81J20 (WTK Canada)
See Installation Instructions for additional information.

Note - Field provided reducer may be required to adapt different vent pipe sizes to termination.

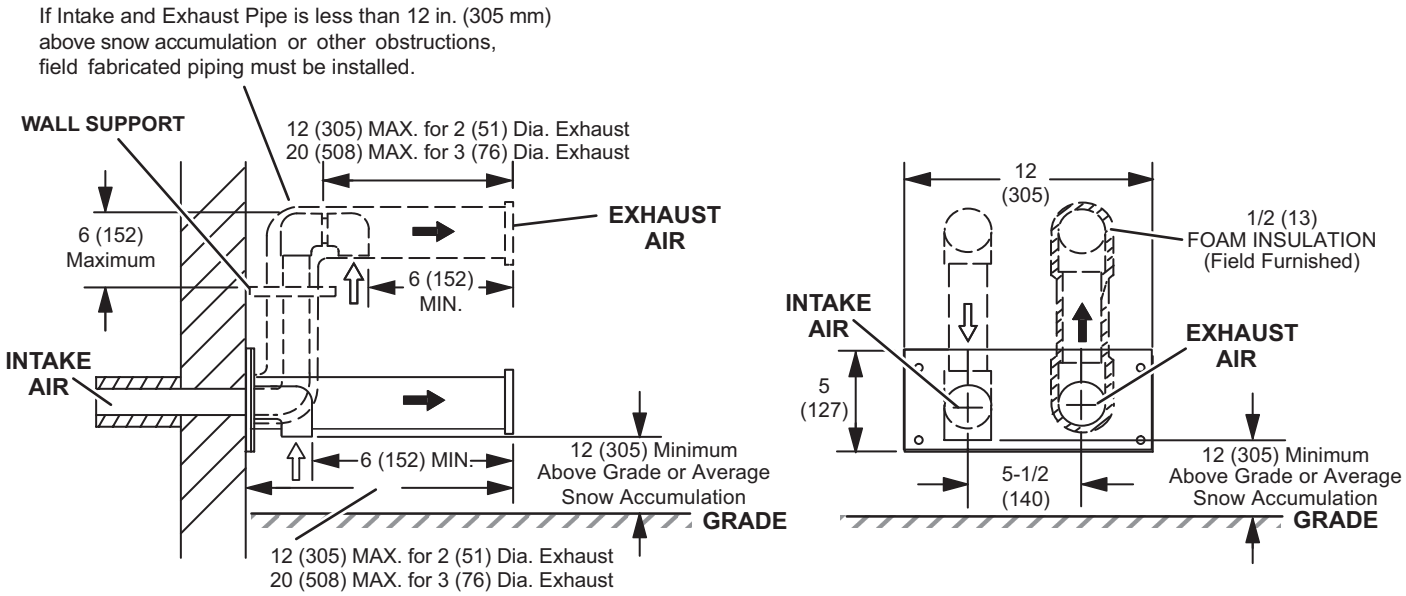

Model		Coil/Furnace Width		Coil Height		Overall Height	
CK40DT	**CRX35**	**in.**	**mm**	**in.**	**mm**	**in.**	**mm**
CK40DT-24B	CRX35-24B	17-1/2	445	18	457	51	1295
CK40DT-30/36B	CRX35-30/36B	17-1/2	445	23-1/2	597	56-1/2	1435
CK40DT-30/36C	CRX35-30/36C	21	533	23-1/2	597	56-1/2	1435
CK40DT-42B	CRX35-42B	17-1/2	445	23-1/2	597	56-1/2	1435
CK40DT-48C	CRX35-48C	21	533	27-1/2	699	60-1/2	1537
CK40CT-50/60C	CRX35-50/60C	21	533	27-1/2	699	60-1/2	1537

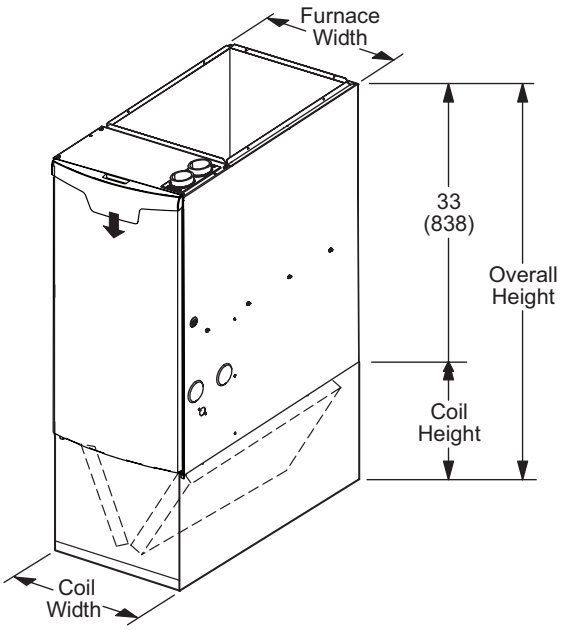

BLOWER DATA

EL296DF045XE36B PERFORMANCE (Less Filter)

External Static Pressure in. w.g.	Air Volume / Watts at Various Blower Speeds									
	High (Black)		Medium-High (Brown)		Medium (Blue)		Medium-Low (Yellow)		Low (Red)	
	cfm	Watts	cfm	Watts	cfm	Watts	cfm	Watts	cfm	Watts
0.00	1466	371	1313	266	1198	207	963	119	902	97
0.10	1434	383	1275	277	1169	217	921	126	860	106
0.20	1401	395	1237	288	1140	227	879	134	817	115
0.30	1363	398	1211	297	1101	238	833	140	773	122
0.40	1300	383	1179	308	1070	243	798	151	733	131
0.50	1228	367	1151	316	1036	256	755	156	692	136
0.60	1146	343	1105	319	1005	263	710	163	645	144
0.70	1058	318	1038	309	971	272	672	170	598	154
0.80	930	286	942	284	909	272	614	179	557	158
0.90	807	251	811	251	799	251	569	184	518	163
1.00	645	222	669	224	630	216	532	189	473	169

EL296DF070XE48B PERFORMANCE (Less Filter)

External Static Pressure in. w.g.	Air Volume / Watts at Various Blower Speeds									
	High (Black)		Medium-High (Brown)		Medium (Blue)		Medium-Low (Yellow)		Low (Red)	
	cfm	Watts	cfm	Watts	cfm	Watts	cfm	Watts	cfm	Watts
0.00	1743	468	1546	327	1377	231	1271	187	1055	105
0.10	1709	485	1510	339	1336	240	1226	196	991	114
0.20	1675	501	1474	350	1294	249	1180	204	927	122
0.30	1638	513	1437	362	1244	261	1127	215	863	130
0.40	1601	529	1386	376	1187	270	1082	226	797	139
0.50	1563	541	1353	388	1139	282	1033	232	727	147
0.60	1511	539	1310	401	1100	293	979	245	661	155
0.70	1445	525	1272	410	1048	304	940	255	604	159
0.80	1339	499	1234	421	1013	313	862	264	531	174
0.90	1243	470	1161	424	952	326	811	272	481	182
1.00	1119	439	1092	414	907	330	763	281	435	192

EL296DF090XE48C PERFORMANCE (Less Filter)

External Static Pressure in. w.g.	Air Volume / Watts at Various Blower Speeds									
	High (Black)		Medium-High (Brown)		Medium (Blue)		Medium-Low (Yellow)		Low (Red)	
	cfm	Watts	cfm	Watts	cfm	Watts	cfm	Watts	cfm	Watts
0.00	1792	429	1553	294	1420	225	1348	194	1228	146
0.10	1750	446	1520	308	1389	240	1306	206	1179	158
0.20	1708	463	1487	323	1359	254	1265	217	1130	171
0.30	1685	477	1456	339	1326	264	1228	230	1090	182
0.40	1630	478	1421	350	1274	281	1192	239	1046	192
0.50	1558	462	1394	363	1246	291	1157	251	989	202
0.60	1458	432	1354	373	1209	300	1114	264	952	210
0.70	1371	408	1312	381	1177	314	1079	271	913	220
0.80	1231	368	1234	366	1138	324	1038	282	861	230
0.90	1118	343	1093	336	1093	327	997	291	843	237
1.00	1008	315	976	309	987	306	952	292	794	242

BLOWER DATA

EL296DF110XE60C PERFORMANCE (Less Filter)

External Static Pressure in. w.g.	Air Volume / Watts at Various Blower Speeds									
	High (Black)		Medium-High (Brown)		Medium (Blue)		Medium-Low (Yellow)		Low (Red)	
	cfm	Watts	cfm	Watts	cfm	Watts	cfm	Watts	cfm	Watts
0.00	2211	681	1962	459	1799	351	1679	302	1494	214
0.10	2174	694	1920	474	1754	365	1631	312	1441	225
0.20	2136	706	1877	488	1709	379	1583	322	1387	237
0.30	2095	718	1832	500	1658	391	1530	332	1323	247
0.40	2058	734	1792	512	1617	403	1487	345	1276	256
0.50	2006	742	1745	525	1570	413	1433	354	1223	265
0.60	1940	727	1704	538	1523	426	1379	368	1168	276
0.70	1863	702	1665	550	1479	436	1340	377	1110	290
0.80	1765	669	1622	563	1439	445	1288	388	1061	293
0.90	1673	642	1582	572	1398	454	1254	397	1013	304
1.00	1559	599	1522	568	1354	466	1214	407	949	311

REVISIONS

Sections	Description of Change
Dimensions	Updated Furnace/Coil Combined Dimension data for new CK40 coils.
Override Accessories	Added Refrigerant Detection System (RDS) Components.

Visit us at www.lennox.com
For the latest technical information, www.LennoxPros.com
Contact us at 1-800-4-LENNOX

NOTE - Due to Lennox' ongoing commitment to quality, Specifications, Ratings and Dimensions subject to change without notice and without incurring liability.
Improper installation, adjustment, alteration, service or maintenance can cause property damage or personal injury.
Installation and service must be performed by a qualified installer and servicing agency.

©2024 Lennox Industries, Inc.