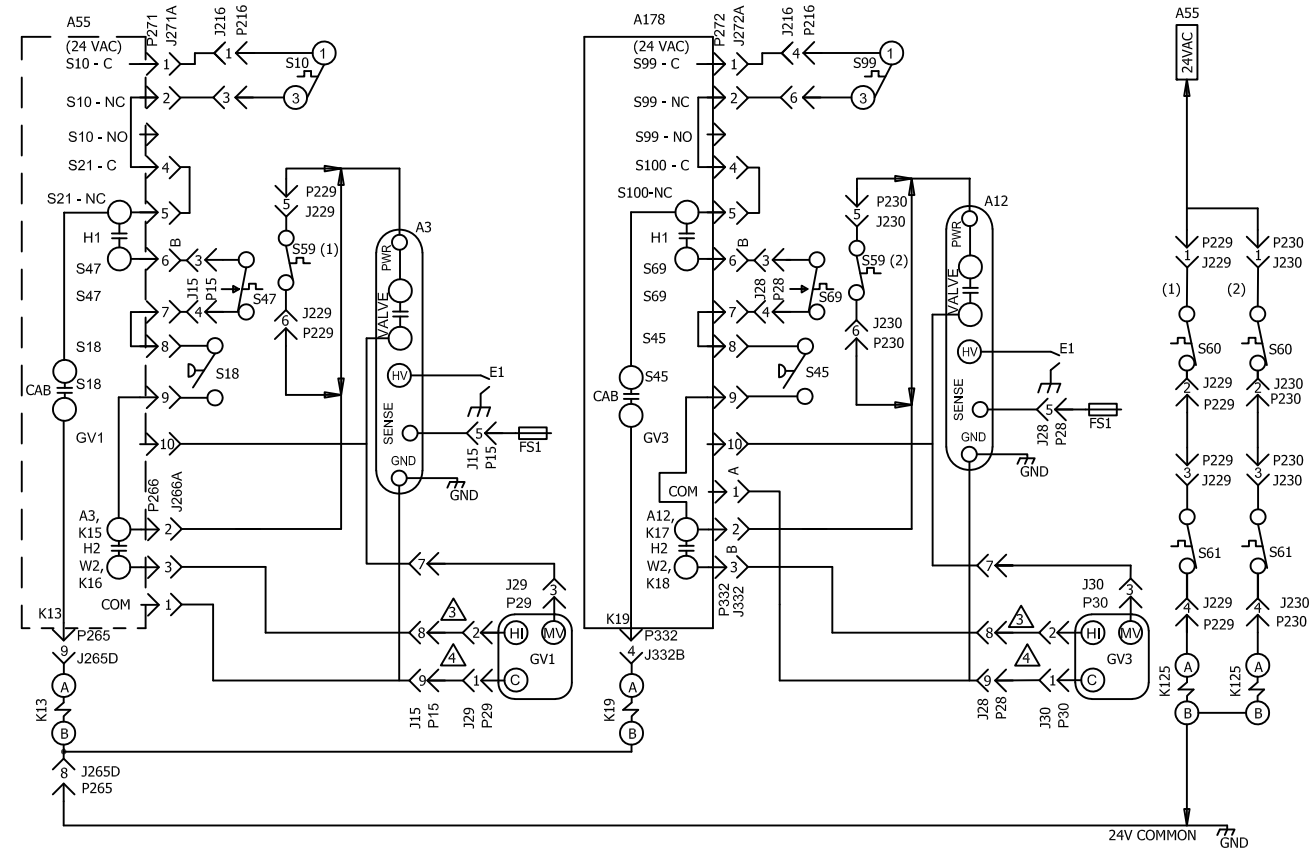

DESCRIPTION	
KEY	DESCRIPTION
A3	CONTROL, BURNER 1
A12	CONTROL, BURNER 2
A55	PANEL, MAIN CONTROL LENNOX
A178	PANEL, COMP 3 & 4 , 2nd STAGE HEAT- C3
B6	MOTOR COMBUSTION AIR BLOWER 1
B15	MOTOR COMBUSTION AIR BLOWER 2
C3	CAPACITOR, COMB AIR BLOWER 1
C11	CAPACITOR, COMB AIR BLOWER 2
E1	SPARK
F10	FUSE, OUTDOOR FAN MOTOR
FS1	SENSOR, FLAME
GV1	VALVE, GAS 1
GV3	VALVE, GAS 2
HR6	HEATER, -50C LOW AMBIENT KIT
K13,-1	RELAY, COMBUSTION AIR BLOWER 1
K19,-1	RELAY, COMBUSTION AIR BLOWER 2
K125,-1	RELAY, HEAT SHUT OFF
S10	SWITCH, LIMIT PRIMARY GAS
S18	SWITCH, COMB AIR BLOWER 1 PROOF
S45	SWITCH, COMB AIR BLOWER 2 PROOF
S47	SWITCH, FLAME ROLLOUT BURNER
S59	TSTAT, OPEN -20F, CLOSE 10F
S60	TSTAT, OPEN 20F, CLOSE -10F
S61	TSTAT, OPEN 50F, CLOSE 20F
S69	SWITCH, FLAME ROLLOUT 2
S99	SWITCH, LIMIT PRIMARY BURNER 2
T3	TRANSFORMER, COMB AIR BLOWER 1
T13	TRANSFORMER, COMB AIR BLOWER 2

J/P	DESCRIPTION
15	BURNER 1
19	COMBUSTION AIR BLOWER 1
21	COMBUSTION AIR BLOWER 2
28	BURNER 2
29	GAS 1 HONEY WELL VALVE
30	GAS 2 HONEY WELL VALVE
216	PRIMARY LIMIT 1
228	VESTIBULE HEATER
229	VESTIBULE HEATER CONTROL 1
230	VESTIBULE HEATER CONTROL 2
265	CONTACTOR RELAY
266	HEATING CONTROL STG 1
271	HEATING SENSORS STG 1
272	HEATING SENSORS STG 2
332	HEATING CONTROL STG 2

1. CSA (-50C) LOW AMBIENT KIT (OPTIONAL)
2. T3 AND T13 USED ON 575 V UNITS ONLY
3. P15-8 TO GV1-2, P28-8 TO GV3-2, ARE OMITTED FOR LOW FIRE UNITS
4. J/P 29 AND J/P 30 ONLY USED ON LGH 260, 360 AND 480 UNITS WITH HONEYWELL GAS VALVES
5. F10 USED ON 240H/300S Y VOLTS, ULTRA Y VOLT UNIT AND ALL NON ULTRA UNITS WITH SCCR OPTIONS
6. T3 AND T13 NOT CONNECT TO F10 ON 575V SCCR UNITS

DENOTES OPTIONAL COMPONENTS

2022/08	WIRING DIAGRAM 537695-05	08/22
COOLING -MSAV NO BYPASS		
GAS HEAT FOR LGH/SG 169,260,360 AND 480		
SECTION B		REV. 0.0
Supersedes 537695-04	New Form No. 537695-05	