©2025 Lennox Industries Inc.
Dallas, Texas, USA

THIS MANUAL MUST BE LEFT WITH THE HOMEOWNER FOR FUTURE REFERENCE

⚠ WARNING

Every working procedure that affects safety means shall only be carried out by competent persons. This appliance is not to be used by persons (including children) with reduced physical, sensory or mental capabilities, or lack of experience and knowledge, unless they have been given supervision or instruction concerning use of the appliance by a person responsible for their safety. Children should be supervised to ensure they do not play with the appliance.

⚠ CAUTION

Leak Detection System installed. Unit must be powered except for service.

⚠ WARNING

Maximum Altitude of application is 3200m above sea level.

⚠ WARNING

Improper installation, adjustment, alteration, service or maintenance can cause property damage, personal injury or loss of life. Installation and service must be performed by a licensed professional HVAC installer or equivalent, service agency, or the gas supplier.

INSTALLATION INSTRUCTIONS

Elite® Series
CBK47UHET Air Handler Units – R454B

MULTI-POSITION AIR HANDLERS
508443-01
4/2025

Table of Contents

General Information 2
Shipping and Packing List 2
Wiring Diagrams 3
Adjusting Blower Speed 5
Requirements 8
Upflow and Downflow Unit Dimensions 10
Horizontal Left- and Right-Hand Discharge Unit Dimensions 11
Installing the Unit 12
Sensor / Bracket Installation....15
Brazing Connections 17
Installing the Condensate Drain 20
Making Electrical Connections 22
Inspecting and Replacing Filters 23
Sealing the Unit 23
Homeowner Maintenance 24
Check-out Procedures 25
Sensor Maintenance 26
Modes of Operation....26
Start Up Test Procedure 28
Decommissioning 29

***NOTE** – This unit is a PARTIAL UNIT AIR CONDITIONER, complying with PARTIAL UNIT requirements of this Standard, and must only be connected to other units that have been confirmed as complying to corresponding PARTIAL UNIT requirements of this Standard, UL 60335-2-40/CSA C22.2 No. 60335-2-40, or UL 1995/CSA C22.2 No 236. Partial units shall only be connected to an appliance suitable for the same refrigerant.*

⚠ IMPORTANT

The Clean Air Act of 1990 bans the intentional venting of refrigerant (CFCs, HCFCs and HFCs) as of July 1, 1992. Approved methods of recovery, recycling or reclaiming must be followed. Fines and/or incarceration may be levied for noncompliance.

⚠ CAUTION

Servicing shall be performed only as recommended by the manufacturer.

⚠ WARNING

Ducts connected to an appliance shall not contain a potential ignition source

0425
508443-01

⚠ WARNING

- Do not use means to accelerate the defrosting process or to clean, other than those recommended by the manufacturer.
- The appliance shall be stored in a room without continuously operating ignition sources (for example: open flames, an operating gas appliance, or an operating electric heater).
- Do not pierce or burn.
- Be aware that refrigerants may not contain an odor.

⚠ WARNING

For appliances using A2L refrigerants connected via an air duct system to one or more rooms, only auxiliary devices approved by the appliance manufacturer or declared suitable with the refrigerant shall be installed in connecting ductwork.

⚠ WARNING

Auxiliary devices which may be a potential ignition source shall not be installed in the duct work. Examples of such potential ignition sources are hot surfaces with a temperature exceeding 700°C and electric switching devices.

⚠ WARNING

For duct connected appliances, false ceilings or drop ceilings may be used as a return air plenum if a REFRIGERANT DETECTION SYSTEM is provided in the appliance and any external connections are also provided with a sensor immediately below the return air plenum duct joint.

⚠ CAUTION

Any service personnel installing, decommissioning, or performing maintenance on the unit must be properly trained with A2L refrigerants

⚠ WARNING

If this appliance is conditioning a space with an area smaller than TA_{min}, then that space must be without continuously operating open flames (e.g. an operating gas appliance) or other potential ignition sources (e.g. an operating electric heater or similar hot surface). A flame-producing device may be installed in the same space if the device is provided with an effective flame arrest system.

TAmin Table

Charge (lb)	10.0	15.0	20.0	25.0	30.0
Charge (kg)	4.5	6.8	9.1	11.3	13.6
Minimum Conditioned Area (ft2)	149.9	224.9	299.9	374.8	449.8
Minimum Conditioned Area (m2)	13.9	20.9	27.9	34.8	41.8

***NOTE** – Multiply values in TAmin table by the Altitude Adjustment Factors to correct TAmin based on installed altitude.*

Altitude Adjustment Factor

Altitude (m)	0	200	400	600	800	1000	1200	1400	1600
Altitude (ft)	0	660	1310	1970	2620	3280	3940	4590	5250
Adj. Factor	1	1	1	1	1.02	1.05	1.04	1.1	1.12
Altitude (m)	1600	1800	2000	2200	2400	2600	2800	3000	3200
Altitude (ft)	5250	5910	6560	7220	7870	8530	9190	9840	10500
Adj. Factor	1.12	1.15	1.18	1.21	1.25	1.28	1.32	1.36	1.4

General Information

The Elite® CBK47UHET series air handler **with all-aluminum coil** is designed for installation with optional field-installed electric heat and a matching R454B outdoor unit.

This instruction is intended as a general guide and does not supersede local or national codes in any way. Consult authorities having jurisdiction before installation.

IMPORTANT: Special procedures are required for cleaning the all-aluminum coil in this unit. See page 25 in this instruction for information.

Shipping and Packing List

Package 1 of 1 contains:

1 – Assembled air handler unit

1 – Horizontal drip shield (CBK47UHET-060 only)

1 – Pipe nipple (SCH80, 3/4" I.D. x 5")

1 – Warranty card

***NOTE** – For downflow applications, order kit number 28B60.*

Check the air handler for shipping damage; if found, immediately contact the last carrier.

Disponible en español en www.LennoxPros.com

Disponible en Français sur le LennoxPros.com site

Wiring Diagrams

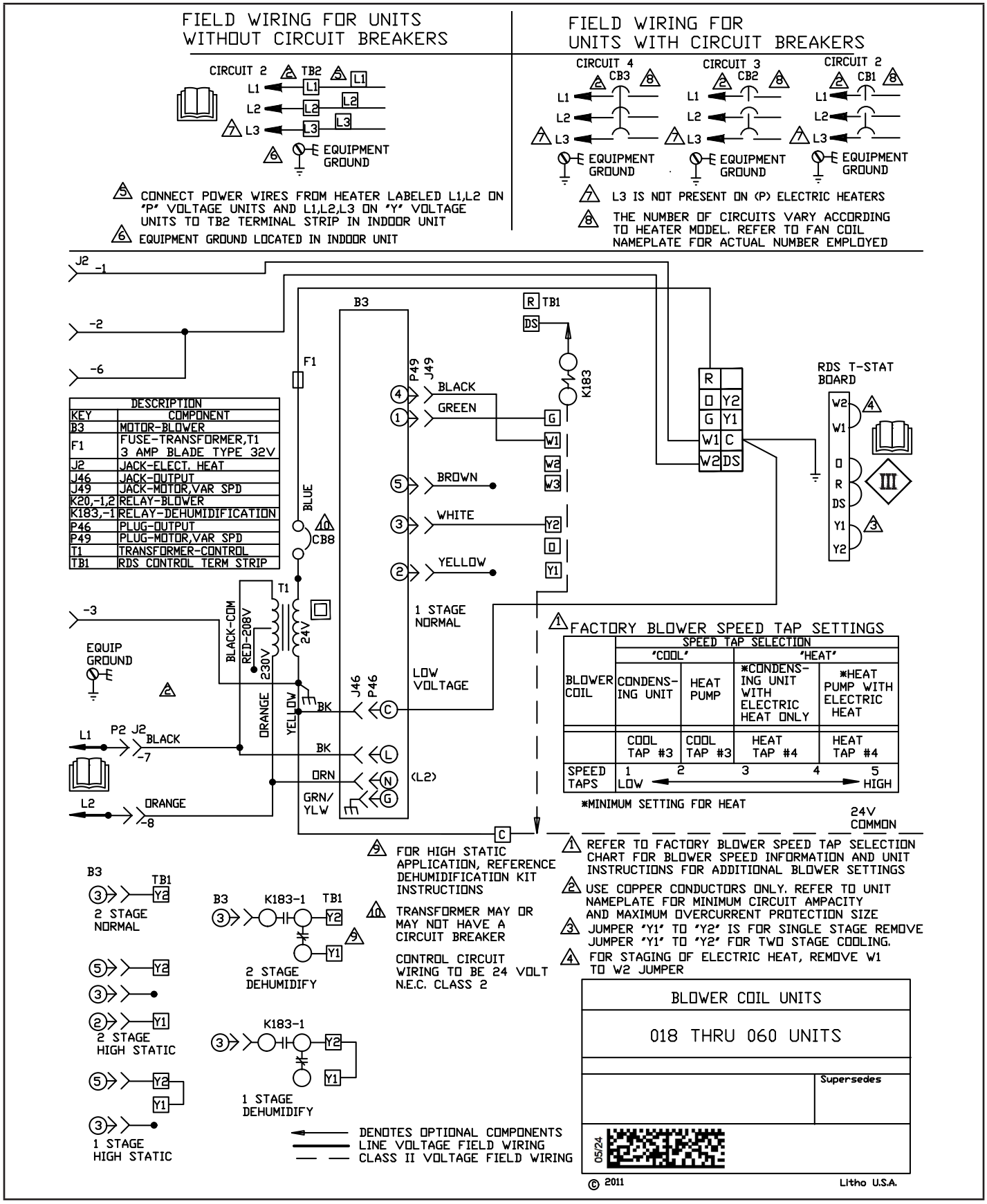

Figure 1. Typical System Wiring Diagram – 240V

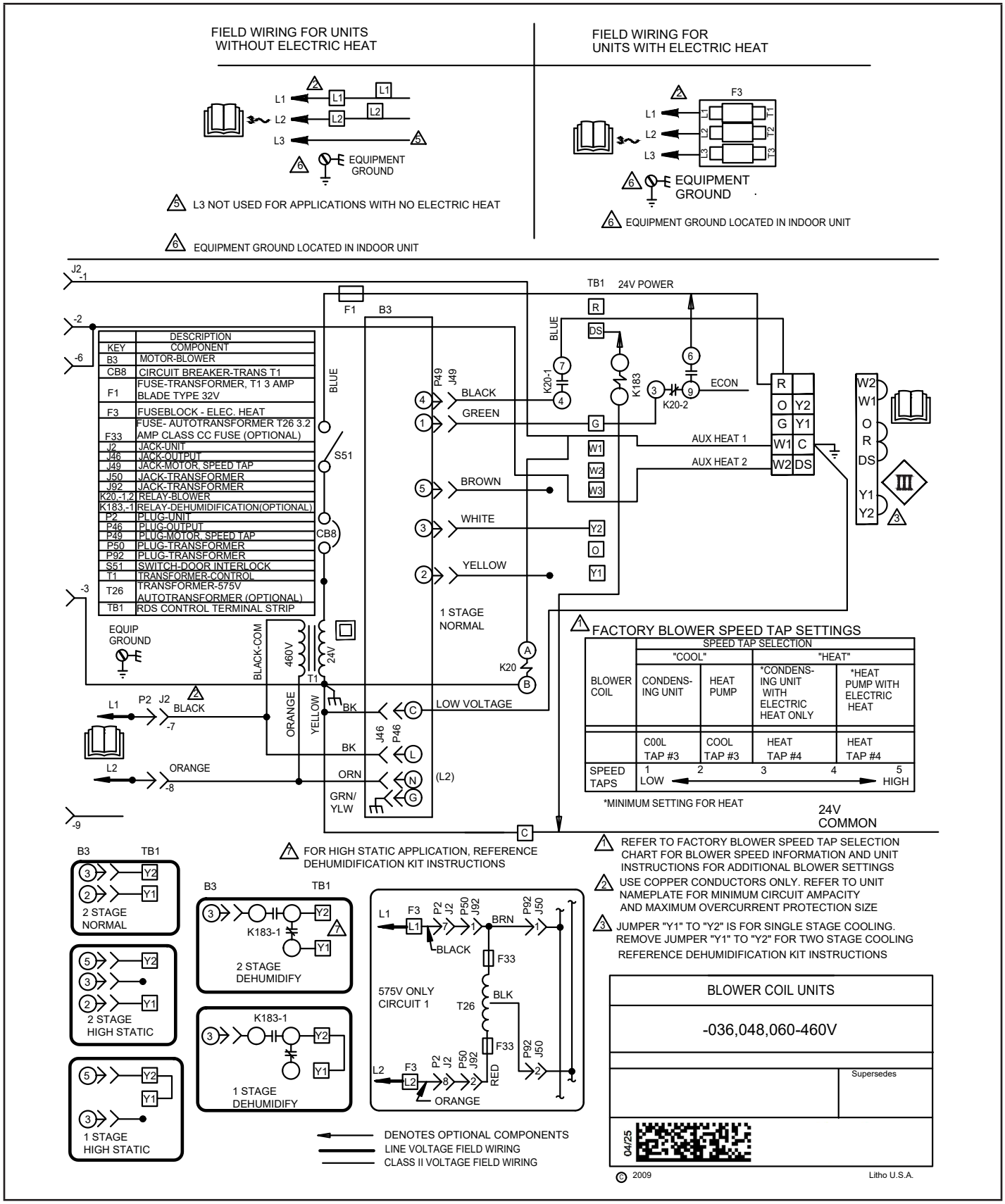

KEY	DESCRIPTION COMPONENT
B3	MOTOR-BLOWER
CB8	CIRCUIT BREAKER-TRANS T1
F1	FUSE-TRANSFORMER, T1 3 AMP BLADE TYPE 32V
F3	FUSEBLOCK - ELEC. HEAT
F33	FUSE- AUTOTRANSFORMER T26 3.2 AMP CLASS CC FUSE (OPTIONAL)
J2	JACK-UNIT
J46	JACK-OUTPUT
J49	JACK-MOTOR, SPEED TAP
J50	JACK-TRANSFORMER
J92	JACK-TRANSFORMER
K20,-1,2	RELAY-BLOWER
K183,-1	RELAY-DEHUMIDIFICATION(OPTIONAL)
P2	PLUG-UNIT
P46	PLUG-OUTPUT
P49	PLUG-MOTOR, SPEED TAP
P50	PLUG-TRANSFORMER
P92	PLUG-TRANSFORMER
S51	SWITCH-DOOR INTERLOCK
T1	TRANSFORMER-CONTROL
T26	TRANSFORMER-575V AUTOTRANSFORMER (OPTIONAL)
TB1	RDS CONTROL TERMINAL STRIP

Figure 2. Typical System Wiring Diagram – 460V Three-Phase Units (-036, -048 and -060 only)

IMPORTANT INFORMATION FOR INSTALLER

CHECK FOR AND REMOVE THESE ITEMS BEFORE OPERATING UNIT.

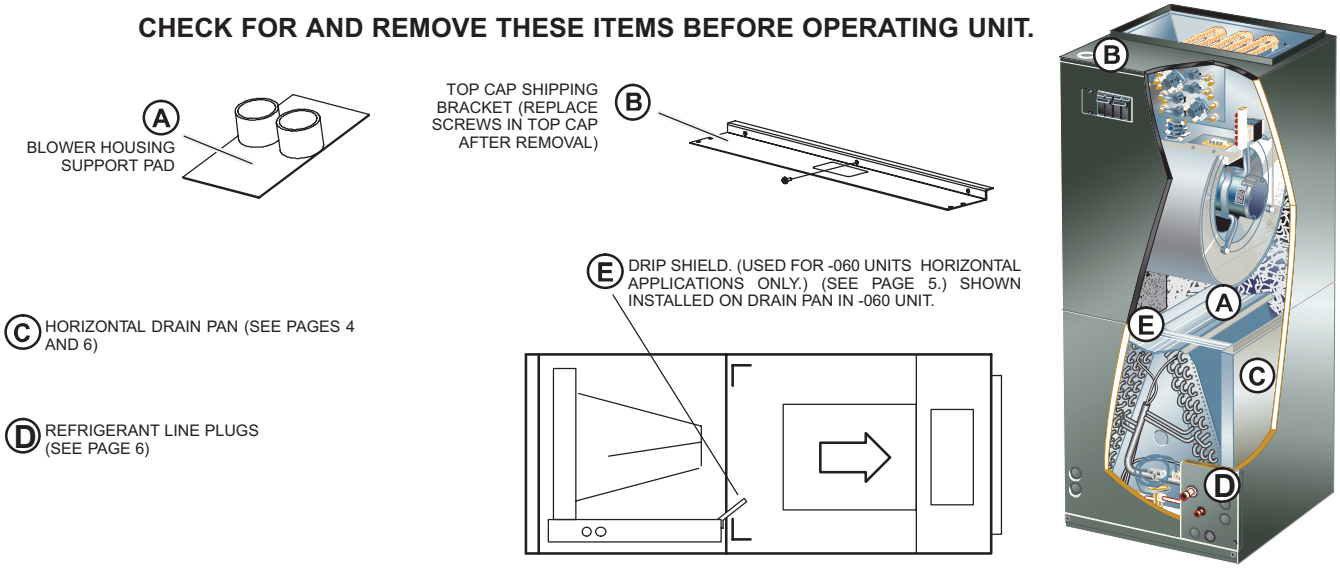

Adjusting Blower Speed

MOTOR SPEED TAPS

NOTE – *Motor is programmed for a 45-second OFF delay on all speed taps except TAP #4 (electric heat – 120-second OFF delay).*

Table 1 lists the recommended factory blower speed tap selections for CBK47UHET series units.

Table 1. Recommended Blower Speed Tap Selection

Operation	CBK47UHET	Outdoor Unit	Tap
Cooling	ALL SIZES	Air conditioner	3
		Heat pump	3
Heating*		Air conditioner with electric heat only	4
		Heat pump with electric heat	4

**Minimum setting for heat*

These settings are for nominal tonnage match-ups with the CBK47UHET units. When matched with other sizes, it is recommended that the CFM be adjusted to approximately 400 CFM per ton.

To change blower motor speed tap remove the speed tap from Y2 on the terminal strip and insert the desired speed tap. Use the Blower Data tables on page 6 - 8 for the desired CFM setting.

BLOWER DATA

CBK47UHET-018 BLOWER PERFORMANCE

External Static Pressure in. w.g.	Air Volume and Motor Watts									
	Tap 1		Tap 2		Tap 3		Tap 4		Tap 5	
	cfm	Watts	cfm	Watts	cfm	Watts	cfm	Watts	cfm	Watts
.10	589	55	713	80	805	101	805	101	963	155
.20	520	61	666	88	760	109	760	109	928	163
.30	452	67	601	96	710	118	710	118	889	173
.40	407	73	548	101	647	126	647	126	851	181
.50	344	81	502	107	598	132	598	132	803	190
.60	293	84	456	114	561	138	561	138	748	199
.70			418	122	522	143	522	143	714	207
.80			362	128	479	150	479	150	676	213
.90			315	132	435	162	435	162	640	220
1.0					389	167	389	167	602	228
1.1					341	173	341	173	576	234
1.2									540	243

CBK47UHET-024 BLOWER PERFORMANCE

External Static Pressure in. w.g.	Air Volume and Motor Watts									
	Tap 1		Tap 2		Tap 3		Tap 4		Tap 5	
	cfm	Watts	cfm	Watts	cfm	Watts	cfm	Watts	cfm	Watts
.10	665	68	804	101	933	143	933	143	1056	197
.20	613	74	762	106	889	151	889	151	1019	206
.30	556	81	718	114	856	158	856	158	988	214
.40	481	87	667	122	822	165	822	165	953	222
.50	425	93	614	129	772	175	772	175	922	229
.60	368	97	527	138	733	182	733	182	895	238
.70	336	101	487	143	683	193	683	193	846	249
.80	293	105	455	148	597	202	597	202	799	258
.90	239	108	414	153	555	208	555	208	725	268
1.0			367	158	519	212	519	212	656	276
1.1			312	162	485	215	485	215	592	267
1.2			291	163	468	219	468	219	486	240

CBK47UHET-030 BLOWER PERFORMANCE

External Static Pressure in. w.g.	Air Volume and Motor Watts									
	Tap 1		Tap 2		Tap 3		Tap 4		Tap 5	
	cfm	Watts	cfm	Watts	cfm	Watts	cfm	Watts	cfm	Watts
.10	775	77	1074	152	1158	182	1158	182	1256	215
.20	727	84	1023	163	1115	193	1115	193	1215	226
.30	669	91	990	170	1081	200	1081	200	1169	237
.40	590	100	948	180	1040	211	1040	211	1135	246
.50	522	106	913	186	1007	219	1007	219	1100	255
.60	463	114	870	196	967	227	967	227	1065	263
.70	417	121	812	206	930	236	930	236	1031	272
.80	375	127	735	219	871	250	871	250	993	281
.90	339	130	676	231	791	264	791	264	965	290
1.0										
1.1										
1.2										

BLOWER DATA

CBK47UHET-036 BLOWER PERFORMANCE

External Static Pressure in. w.g.	Air Volume and Motor Watts at 208V									
	Tap 1		Tap 2		Tap 3		Tap 4		Tap 5	
	cfm	Watts	cfm	Watts	cfm	Watts	cfm	Watts	cfm	Watts
.10	973	115	1239	210	1301	243	1301	243	1447	320
.20	925	123	1194	221	1264	253	1264	253	1411	331
.30	876	131	1156	230	1229	263	1229	263	1379	341
.40	841	138	1118	240	1189	275	1189	275	1336	354
.50	762	150	1082	248	1158	284	1158	284	1306	364
.60	694	161	1049	257	1127	293	1127	293	1274	375
.70	644	168	1001	270	1094	303	1094	303	1241	386
.80	583	178	978	279	1032	321	1032	321	1215	394
.90	552	184	868	299	958	339	958	339	1169	412
1.0	497	193	828	307	913	350	913	350	1112	430
1.1	455	201	783	318	877	357	877	357	1059	445
1.2	418	207	745	327	838	367	838	367	1011	458

CBK47UHET-042 BLOWER PERFORMANCE

External Static Pressure in. w.g.	Air Volume and Motor Watts									
	Tap 1		Tap 2		Tap 3		Tap 4		Tap 5	
	cfm	Watts	cfm	Watts	cfm	Watts	cfm	Watts	cfm	Watts
.10	1185	150	1330	202	1534	279	1471	282	1697	405
.20	1131	161	1278	214	1487	293	1437	292	1659	419
.30	1077	171	1236	224	1447	304	1395	305	1620	434
.40	1029	181	1191	235	1406	317	1353	315	1590	445
.50	989	188	1152	244	1367	327	1310	331	1552	459
.60	922	201	1107	255	1319	342	1277	341	1521	471
.70	872	210	1061	265	1286	352	1240	352	1483	487
.80	833	217	1013	276	1248	363	1200	365	1453	497
.90	774	225	970	285	1199	377	1162	376	1415	511
1.0	742	233	937	293	1160	388	1085	393	1384	525
1.1	651	250	893	302	1121	398	1072	400	1302	544
1.2	606	259	816	315	1077	410	1038	410	1277	553

CBK47UHET-048 BLOWER PERFORMANCE

External Static Pressure in. w.g.	Air Volume and Motor Watts									
	Tap 1		Tap 2		Tap 3		Tap 4		Tap 5	
	cfm	Watts	cfm	Watts	cfm	Watts	cfm	Watts	cfm	Watts
.10	1202	172	1569	355	1755	470	1753	472	1967	637
.20	1147	192	1526	376	1713	486	1728	495	1942	647
.30	1121	191	1498	372	1701	497	1675	497	1916	657
.40	1066	201	1452	383	1675	529	1669	511	1879	681
.50	1031	220	1430	411	1636	524	1639	536	1845	704
.60	936	227	1400	404	1602	547	1594	548	1811	713
.70	865	237	1358	421	1582	562	1584	541	1777	730
.80	827	251	1328	441	1551	566	1545	569	1767	731
.90	777	253	1292	442	1524	572	1513	581	1732	758
1.0	718	278	1258	453	1487	580	1482	588	1703	777
1.1	692	272	1152	498	1451	613	1452	599	1681	788
1.2	666	293	1115	507	1429	624	1412	627	1639	783

CBK47UHET-060 BLOWER PERFORMANCE

External Static Pressure in. w.g.	Air Volume and Motor Watts									
	Tap 1		Tap 2		Tap 3		Tap 4		Tap 5	
	cfm	Watts	cfm	Watts	cfm	Watts	cfm	Watts	cfm	Watts
.10	1354	222	1768	454	1954	616	1870	550	2148	808
.20	1307	240	1742	478	1929	627	1845	556	2124	846
.30	1267	246	1706	479	1898	643	1817	581	2097	843
.40	1222	263	1677	492	1861	675	1781	609	2058	859
.50	1177	273	1644	511	1837	693	1759	616	2034	888
.60	1150	289	1608	526	1814	703	1719	635	2019	894
.70	1044	308	1577	555	1786	687	1671	661	1975	912
.80	994	311	1537	577	1773	710	1645	680	1938	930
.90	938	317	1516	561	1712	736	1639	666	1927	938
1.0	877	330	1475	590	1696	753	1613	687	1892	943
1.1	846	346	1418	619	1677	755	1567	713	1836	945
1.2	816	345	1392	626	1648	765	1526	719	1795	940

⚠ IMPORTANT

This unit is approved for installation clearance to combustible material as stated on the unit rating plate. Accessibility and service clearances must take precedence over combustible material clearances.

The air handler must be installed so that free access is allowed to the coil/filter compartment and blower/control compartment.

⚠ CAUTION

As with any mechanical equipment, contact with sharp sheet metal edges can result in personal injury. Take care while handling this equipment and wear gloves and protective clothing.

⚠ IMPORTANT

The high-efficiency programmable motor features programmed electronic braking. The integral control brakes the motor near the end of the supply blower operation, allowing the motor to maintain a more controlled ramping shut-down.

⚠ IMPORTANT

Minimum Air Flow when RDS initiates mitigation is factory set at 350 CFM Per Ton.

Table 2. Motor Speed Taps

Tap	Operation	Remarks
1	**Continuous or low-speed fan** (for two-speed heat pumps or AC units)	Continuous fan speed is energized (24volt input to G) when either G or Y1 has a 24 volt signal (24 volt input from Y1 passes through the room thermostat's Fan Automatic contacts to the G terminal).

Table 2. Motor Speed Taps

2	**Low-speed operation on high-static system**	CFM set at 1/2 ton lower than nominal of unit at 0.5" static (e.g. 3-ton set at 1000 cfm).
3	**Cooling speed setting**	CFM set at 400 cfm per nominal ton at 0.5" static.
4	**Heat pump with electric heat**	CFM set at 400 cfm per nominal ton at .5 static. Energized when electric heat element has a call for heat.
5	**High-static applications**	CFM set at 1/2 ton higher than nominal of unit at 0.5" static.

⚠ WARNING

To prevent serious injury or death:

1. Lock-out/tag-out before performing maintenance.
2. If system power is required (e.g., smoke detector maintenance), disable power to blower, remove fan belt where applicable, and ensure all controllers and thermostats are set to the "OFF" position before performing maintenance.
3. Always keep hands, hair, clothing, jewelry, tools, etc. away from moving parts.

Requirements

⚠ IMPORTANT

CBK47UHET units include a factory-installed check/expansion valve which will provide optimal refrigerant control and system performance with outdoor units of varying capacities. These units must be installed as a part of a matched system as outlined in the CBK47UHET Product Specification bulletin (EHB).

These instructions are intended as a general guide and do not supersede local or national codes in any way. Consult authorities having jurisdiction before installation.

Compliance with all local, state, or national codes pertaining to this type of equipment should be determined prior to installation. Read this instruction manual, as well as the instructions supplied in separate equipment, before starting the installation.

In addition to conforming to manufacturer's installation instructions and local municipal building codes, installation of Lennox air handler units (with or without optional electric heat), MUST conform with National Fire Protection Association (NFPA) standards: "Standard for Installation of Air Conditioning and Ventilation Systems" (NFPA No. 90A) and "Standard for Installation of Residence Type Warm Air Heating and Air Conditioning Systems" (NFPA No. 90B).

All models are designed for indoor installation only. The installation of the air handler, field wiring, duct system, etc. must conform to the requirements of the National Electrical Code, ANSI/NFPA No. 70 (latest edition) in the United States, and any state laws, and local ordinances (including plumbing or waste water codes).

Local authorities having jurisdiction should be consulted before installation is made. Such applicable regulations or requirements take precedence over the general instructions in this manual.

Install the conditioned air plenum, ducts and air filters (provided) in accordance with NFPA 90B Standard for the Installation of Warm Air Heating and Air-Conditioning Systems (latest edition).

The air handler is shipped from the factory completely assembled. The unit is provided with flanges for the connection of the duct system.

Do not remove the cabinet knockouts until it has been determined which knockouts will need to be removed for the installation.

Select the air discharge position which best suits the site conditions. Consider required clearances, space, routing requirements for refrigerant line, condensate disposal, filters, duct system, wiring, and accessibility for service. Refer to the rating plate on the air handler for specific information.

⚠ WARNING

Danger of explosion. Keep flammable materials and vapors, such as gasoline, away from air handler. Place air handler so that heating elements are at least 18 inches (46 cm) above the floor for a garage installation. Failure to follow these instructions can result in death, explosion, or fire.

⚠ IMPORTANT

Excessive condensation may occur if the unit is installed in a warm, humid place. When the unit is installed in an unconditioned space, apply sealant around electrical wires, refrigerant piping and condensate lines at the point where they enter the cabinet.

Apply sealant on the inside of the cabinet at the point where the electrical wires exit through the conduit opening. This will also keep warm and moist unconditioned air out of the air handler cabinet where it will form condensate on the cooler control box and electrical controls.

NOTES –

During cooling operation, excessive sweating may occur if the air handler is installed in a warm and humid space.

If installed in an unconditioned space, sealant should be applied around the electrical wires, refrigerant tubing, and condensate lines where they enter the cabinet.

Electrical wires should be sealed on the inside where they exit the conduit opening. Sealant is required to prevent air leakage into, and condensate from forming inside of, the air handler, the control box, and on the electrical controls.

This unit is approved for installation clearance to combustible material as stated on the unit rating plate. Accessibility and service clearances must take precedence over combustible material clearances.

The air handler must be installed so that free access is allowed to the coil/filter compartment and blower/control compartment.

In addition to conforming to manufacturer's installation instructions and local municipal building codes, installation of Lennox air handler units (with or without optional electric heat), shall conform with the following National Fire Protection Association (NFPA) standards:

- NFPA No. 90A - Standard for Installation of Air Conditioning and Ventilation Systems
- NFPA No. 90B - Standard for Installation of Residence Type Warm Air Heating and Air Conditioning Systems

This unit is approved for installation clearance to combustible material as stated on the unit rating plate. Accessibility and service clearances must take precedence over combustible material clearances.

Upflow and Downflow Unit Dimensions

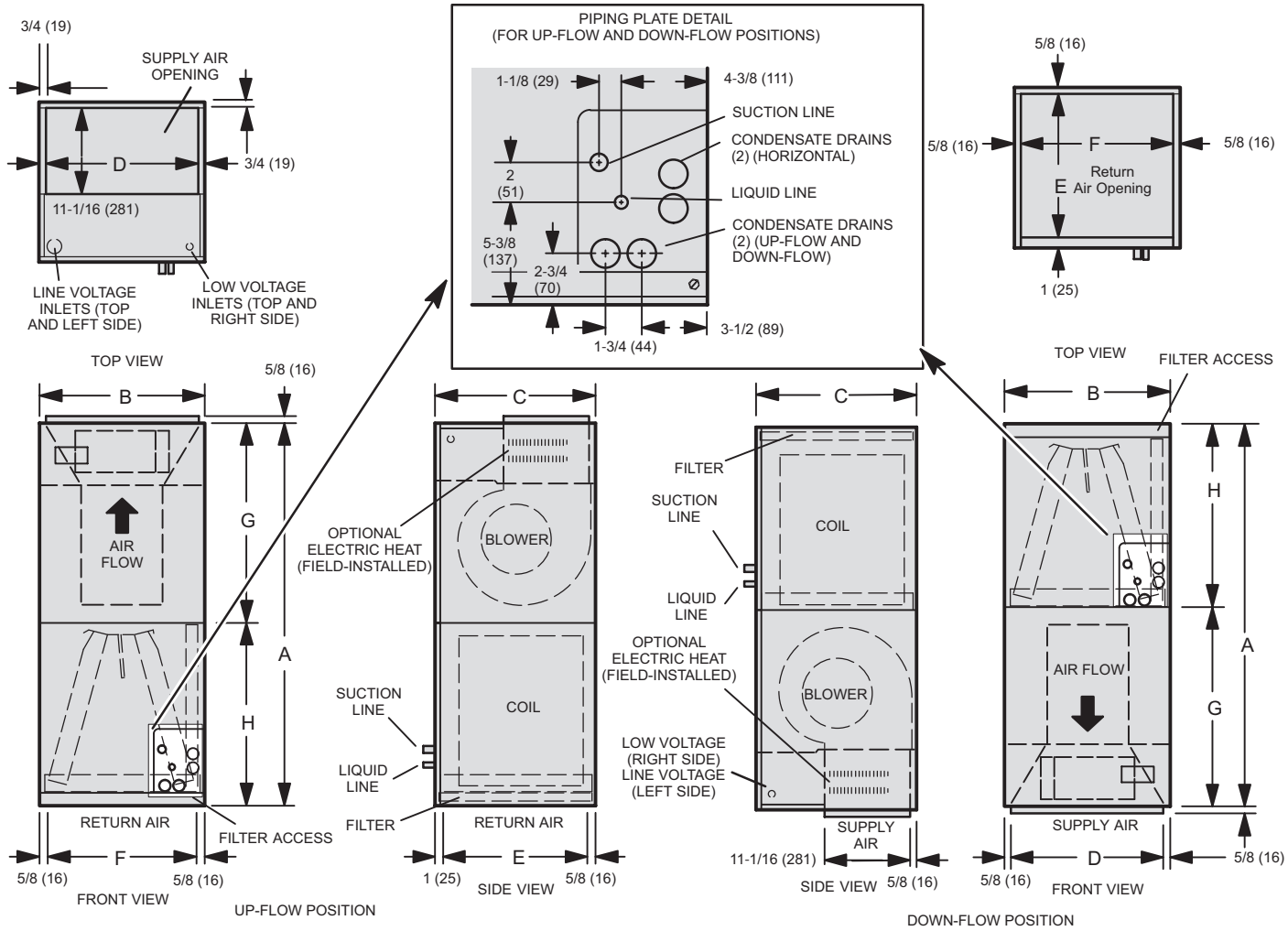

CBK47UHET Common Dimensions - Inches (mm)				
Dim.	**-018/-024**	**-030/-036**	**-042/-048**	**-060**
A	49-1/4 (1251)	51 (1295)	58-1/2 (1486)	62-1/2 (1588)
B	21-1/4 (540)	21-1/4 (540)	21-1/4 (540)	21-1/4 (540)
C	20-5/8 (524)	22-5/8 (575)	24-5/8 (625)	24-5/8 (625)
D	19-3/4 (502)	19-3/4 (502)	19-3/4 (502)	19-3/4 (502)
E	19 (483)	21 (533)	23 (584)	23 (584)
F	20 (508)	20 (508)	20 (508)	20 (508)
G	24-5/8 (625)	26-3/8 (670)	27-7/8 (708)	27-7/8 (708)
H	24-5/8 (625)	24-5/8 (625)	30-5/8 (778)	34-5/8 (879)

Horizontal Left- and Right-Hand Discharge Unit Dimensions

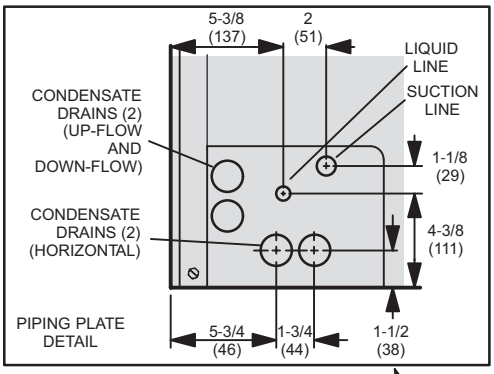

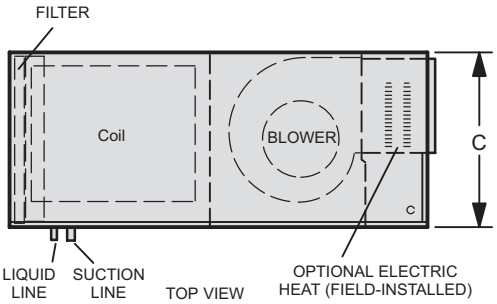

Horizontal Position (Right-Hand Air Discharge)

FOR DIMENSIONS "A" THROUGH "H", SEE CHART ON PAGE 2.

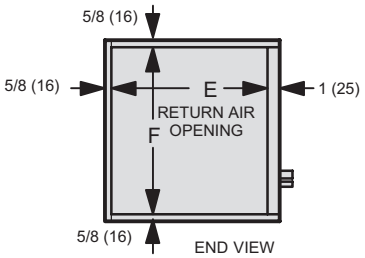

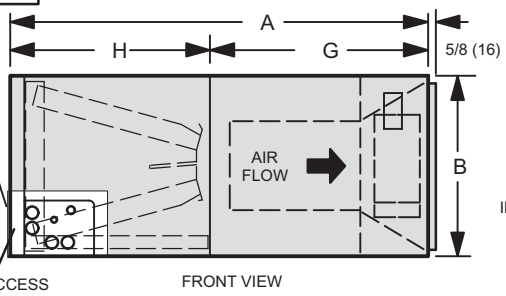

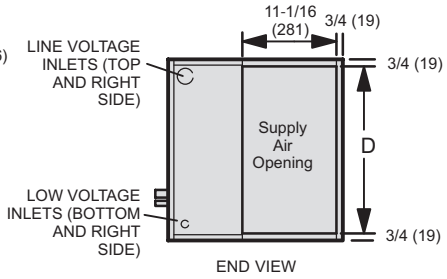

Horizontal Position (Left-Hand Air Discharge)

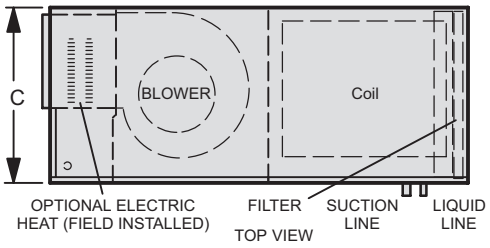

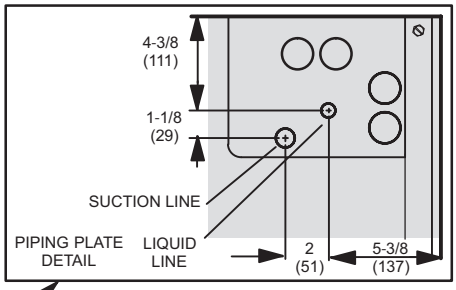

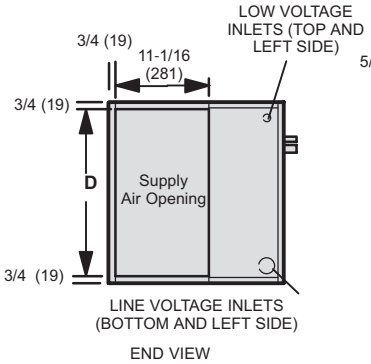

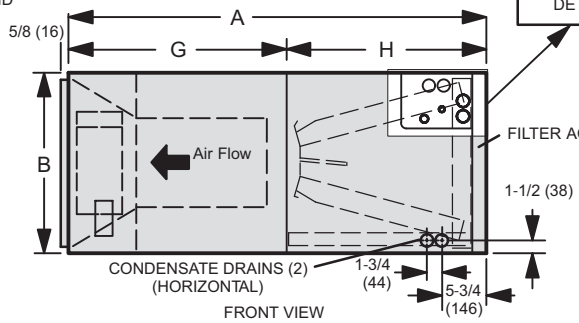

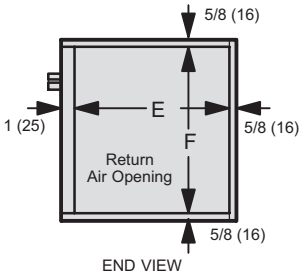

Installing the Unit

These units are factory-configured for upflow and horizontal right-hand discharge installation. For downflow or horizontal left-hand discharge, certain field modifications are required.

Every working procedure that affects safety means shall only be carried out by competent persons. This appliance is not to be used by persons (including children) with reduced physical, sensory or mental capabilities, or lack of experience and knowledge, unless they have been given supervision or instruction concerning use of the appliance by a person responsible for their safety. Examples of such working procedures are breaking into the refrigerating circuit, opening of sealed components, and opening of ventilated enclosures.

- Work shall be undertaken under a controlled procedure so as to minimize the risk of a flammable gas or vapor being present while the work is being performed.
- The area shall be checked with an appropriate refrigerant detector prior to and during work, to ensure the technician is aware of potentially toxic or flammable atmospheres. Ensure that the leak detection equipment being used is suitable for use with all applicable refrigerants, i. e. non-sparking, adequately sealed or intrinsically safe.
- If any hot work is to be conducted on the refrigerating equipment or any associated parts, the appropriate fire extinguishing equipment shall be available to hand. Have a dry powder or CO2 fire extinguisher adjacent to the charging area.
- No person carrying out work in relation to a refrigerating system which involves exposing any pipe work shall use any sources of ignition in such a manner that it may lead to the risk of fire or explosion. All possible ignition sources, including cigarette smoking, should be kept sufficiently far away from the site of installation, repairing, removing and disposal, during which refrigerant can possibly be released to the surrounding space. Prior to work taking place, the area around the equipment is to be surveyed to make sure that there are no flammable hazards or ignition risks. “No Smoking” signs shall be displayed.
- Ensure that the area is in the open or that it is adequately ventilated before breaking into the system or conducting any hot work. A degree of ventilation shall continue during the period that the work is carried out.
- Pipe-work including piping material, pipe routing, and installation shall include protection from physical damage in operation and service, and be in compliance with national and local codes and standards
- All field joints shall be accessible for inspection prior to being covered or enclosed
- Where electrical components are being changed, they shall be fit for the purpose and to the correct specification. At all times the manufacturer’s maintenance and service guidelines shall be followed. If in doubt, consult the manufacturer’s technical department for assistance. The following checks shall be applied to installations using FLAMMABLE REFRIGERANTS as applicable:

1. The actual refrigerant charge is in accordance with the room size within which the refrigerant containing parts are installed.
2. The ventilation machinery and outlets are operating adequately and are not obstructed.
3. If an indirect refrigerating circuit is being used, the secondary circuit shall be checked for the presence of refrigerant.
4. Markings on the equipment should be visible and legible. Markings and signs that are illegible shall be corrected.
5. Refrigerating pipe or components are installed in a position where they are unlikely to be exposed to any substance which may corrode refrigerant containing components, unless the components are constructed of materials which are inherently resistant to being corroded or are suitably protected against being so corroded.

- For systems containing refrigerant, all repair and maintenance to electrical components shall include initial safety checks and component inspection procedures such as that capacitors are discharged in a safe manner to avoid possibility of sparking, that no live electrical components and wiring are exposed while charging, recovering, or purging the system, and that there is continuity of earth bonding. If a fault exists that could compromise safety, then no electrical supply shall be connected to the circuit until it is satisfactorily dealt with. If the fault cannot be corrected immediately but it is necessary to continue operation, an adequate temporary solution shall be used that is reported to the owner of the equipment, so all parties are advised.

NOTE *–Sealed electrical components shall be replaced, not repaired*.

NOTE *– Intrinsically safe components must be replaced, not repaired.*

NOTE *– All maintenance staff and others working in the local area shall be instructed on the nature of work being carried out with work in confined spaces being avoided.*

- Under no circumstances shall potential sources of ignition be used in the searching for or detection of refrigerant leaks. A halide torch (or any other detector using a naked flame) shall not be used. The following leak detection methods are deemed acceptable for all refrigerant systems. Electronic leak detectors may be used to detect refrigerant leaks but, in the case of flammable refrigerants, the sensitivity may not be adequate, or may need re-calibration. (Detection equipment shall be calibrated in a refrigerant-free area.) Ensure that the detector is not a potential source of ignition and is suitable for the refrigerant used. Leak detection equipment shall be set at a percentage of the LFL of the refrigerant and shall be calibrated to the refrigerant employed, and that 12.5 % refrigerant is confirmed. Leak detection fluids are also suitable for use with most refrigerants but the use of detergents containing chlorine shall be avoided as the chlorine may react with the refrigerant and corrode the copper pipe-work. If

a leak is suspected, all naked flames shall be removed/extinguished. If a leakage of refrigerant is found which requires brazing, all of the refrigerant shall be recovered from the system, or isolated (by means of shut off valves) in a part of the system remote from the leak.

- When breaking into the refrigerant circuit to make repairs – or for any other purpose – conventional procedures shall be used. However, for flammable refrigerants it is important that best practice be followed and, since flammability is a consideration, procedures such as safely remove refrigerant following local and national regulations, purging the circuit with inert gas, evacuating (optional for A2L), purging with inert gas (optional for A2L), or opening the circuit by cutting or brazing be adhered to. The refrigerant charge shall be recovered into the correct recovery cylinders if venting is not allowed by local and national codes. For appliances containing flammable refrigerants, the system shall be purged with oxygen-free nitrogen to render the appliance safe for flammable refrigerants. This process might need to be repeated several times. Compressed air or oxygen shall not be used for purging refrigerant systems. For appliances containing flammable refrigerants, refrigerants purging shall be achieved by breaking the vacuum in the system with oxygen-free nitrogen and continuing to fill until the working pressure is achieved, then venting to atmosphere, and finally pulling down to a vacuum (optional for A2L). This process shall be repeated until no refrigerant is within the system (optional for A2L). When the final oxygen-free nitrogen charge is used, the system shall be vented down to atmospheric pressure to be able to perform the required work. Ensure that the outlet for the vacuum pump is not close to any potential ignition sources and working area is well ventilated.

DISASSEMBLE/REASSEMBLE AIR HANDLER UNITS

The air handler units consists of two factory-assembled sections. It may be necessary to disassemble the sections when positioning the unit for installation.

To disassemble:

1 - Remove access panels.

2 - Remove both blower and coil assemblies. This will lighten the cabinet for lifting.

3 - Remove one screw from the left and right posts inside the unit. Remove one screw from each side on the back of the unit. Unit sections will now separate.

To reassemble:

1 - Align cabinet sections together.

2 - Reinstall screws.

3 - Replace blower and coil assemblies.

4 - Replace access panel.

UPFLOW APPLICATION

Use the following procedures to configure the unit for upflow operations:

1 - Remove access panels.

2 - Remove and discard the horizontal drip shield (-060 model, used only on horizontal applications) and the corrugated padding between the blower and coil assembly.

3 - The horizontal drain pan must be removed when the coil blower is installed in the upflow position. Removing the horizontal drain pain will allow proper air flow and increased efficiency.

4 - After removing the horizontal drain pan, place the unit in the desired location. Set unit so that it is level. Connect return and supply air plenums as required using sheet metal screws as illustrated in Figure 3.

5 - Install units that have no return air plenum on a stand that is at least 14" from the floor to allow for proper air return. Lennox offers an optional upflow unit stand as listed in Table 3.

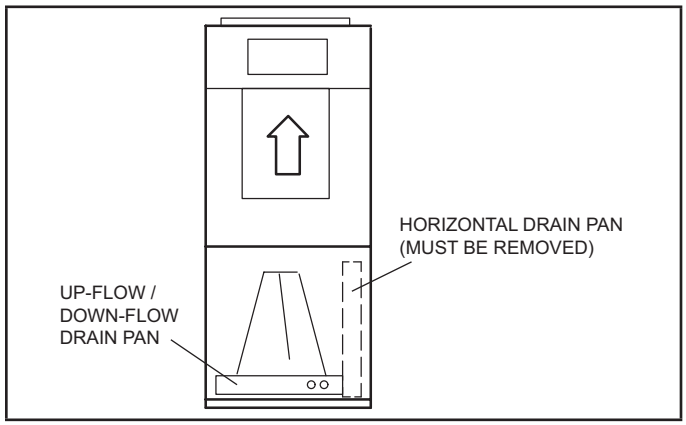

Figure 3. Upflow Configuration

Table 3. Optional Side-Return Unit Stand (Upflow Only)

Model	Kit Number
All unit sizes	45K32

HORIZONTAL RIGHT-HAND DISCHARGE APPLICATION

Use the following procedures to configure the unit for horizontal right-hand discharge operations:

NOTE – *For horizontal applications, a secondary drain pan is recommended. Refer to local codes.*

1 - Before operating the unit, remove access panels and the horizontal drip shield (-060 model) and the corrugated padding between the blower and coil assembly. Discard the corrugated padding.

2 - Install the horizontal drip shield (-060) on the front edge of the horizontal drain pan as illustrated in Figure 4.

3 - No further adjustment is necessary. Set unit so that it is sloped 1/4" towards the drain pan end of the unit.

4 - If the unit is suspended, the entire length of the cabinet must be supported. If you use a chain or strap, use a piece of angle iron or sheet metal attached to the unit (either above or below) to support the length of the cabinet. Use securing screws no longer than 1/2" to avoid damaging the coil or filter as illustrated in Figure 5. Use sheet metal screws to connect the return and supply air plenums as required.

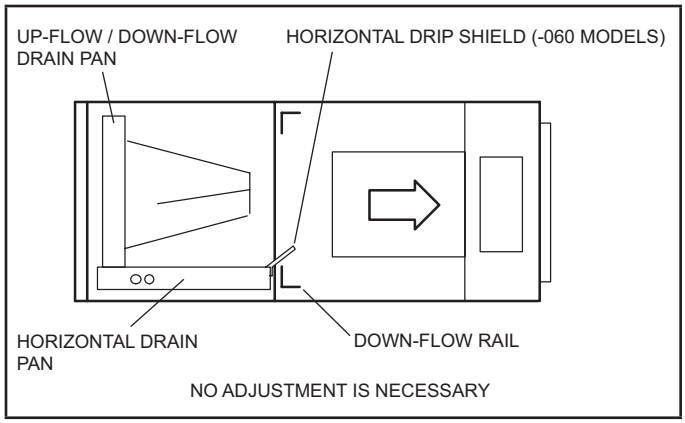

Figure 4. Right-Hand Discharge Configuration

HORIZONTAL RIGHT-HAND DISCHARGE APPLICATION IN HIGH-HUMIDITY AREAS

For horizontal applications in high humidity areas, remove the downflow rail closest to the drain pan.

To remove rail:

1 - Remove the screws from the rail at the back of unit and at the cabinet support rail.

2 - Remove the downflow rail then replace screws.

3 - Seal around the exiting drain pipe, liquid line, and suction line to prevent humid air from infiltrating into the unit.

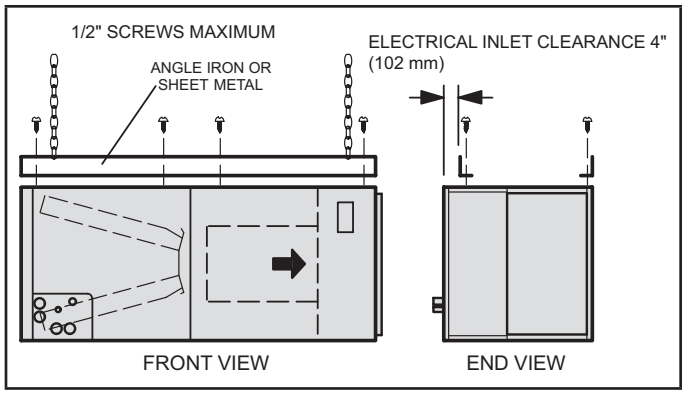

Figure 5. Suspending Horizontal Unit

⚠ IMPORTANT

When removing the coil, there is possible danger of equipment damage and personal injury. Be careful when removing the coil assembly from a unit installed in right- or left-hand applications. The coil may tip into the drain pan once it is clear of the cabinet. Support the coil when removing it.

HORIZONTAL LEFT-HAND DISCHARGE APPLICATION

NOTE – *For horizontal applications, a secondary drain pan is recommended. Refer to local codes.*

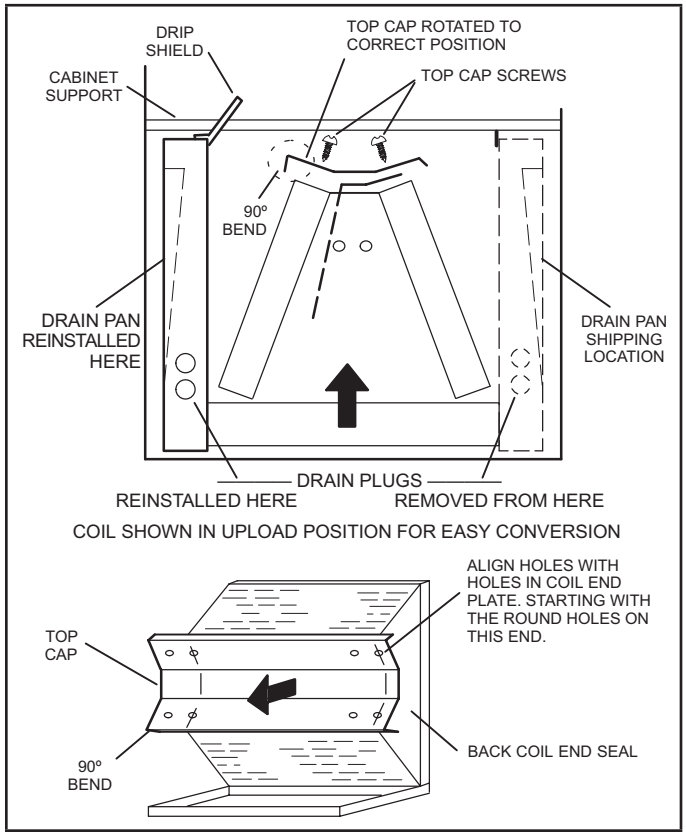

Figure 6. Field Modification for Left-Hand Discharge

Use the following procedures to configure the unit for horizontal left-hand discharge operations:

1 - Before operating the unit, remove access panels and the horizontal drip shield (-060 model) and the corrugated padding between the blower and coil assembly. Discard the corrugated padding.

2 - Pull the coil assembly from unit. Pull off the horizontal drain pan.

3 - Remove the drain plugs from back drain holes on horizontal drain pan and reinstall them on front holes.

⚠ IMPORTANT

After removal of drain pan plug(s), check drain hole(s) to verify that drain opening is fully open and free of any debris. Also check to make sure that no debris has fallen into the drain pan during installation that may plug up the drain opening.

4 - Rotate drain pan 180º front-to-back and install it on the opposite side of the coil.

5 - Remove screws from top cap. Remove horizontal drip shield screw located in the center of the back coil end seal as illustrated in Figure 6.

6 - Rotate horizontal drip shield 180º front-to-back.

7 - Remove plastic plug from left hole on coil front end seal and reinstall plug in back hole. Reinstall horizontal drip shield screw in front coil end seal. Drip shield should drain downward into horizontal drain pan inside coil.

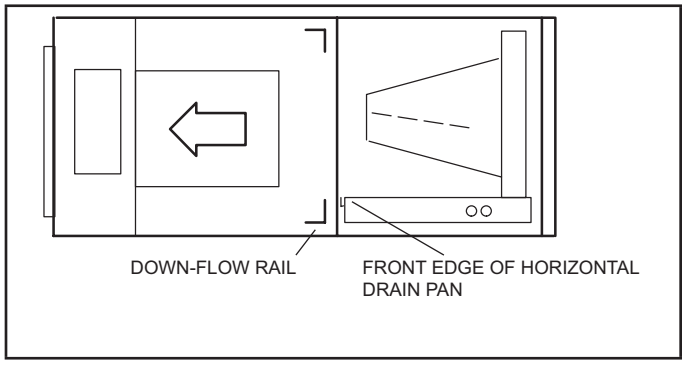

Figure 7. Left-Hand Discharge Configuration

8 - Rotate top cap 180º front-to-back and align with unused screw holes. Holes must align with front and back coil end plates. The top cap has a 45º bend on one side and a 90º bend on the other. **The 90º bend must be on the same side as the horizontal drain pan** as illustrated in Figure 6.

NOTE – *Be very careful when reinstalling the screws into the coil end plate engaging holes. Misaligned screws may damage the coil.*

9 - From the upflow position, flip cabinet 90º to the left and set into place. Replace blower assembly. Secure coil in place by bending down the tab on the cabinet support rail as illustrated in Figure 6 and Figure 7.

10 - Install the horizontal drip shield (-060 model) on the front edge of the horizontal drain pan as illustrated in Figure 6.

NOTE – *For horizontal applications in high humidity areas, remove the downflow rail closest to the drain pan. To remove rail, remove screw from rail at back of unit and at cabinet support rail. Remove downflow rail then replace screws. Also, seal around the exiting drain pipe, liquid and suction lines to prevent infiltration of humid air.*

11 - Knock out drain seal plate from access door. Secure plate to cabinet front flange with screw provided.

12 - Flip access door and replace it on the unit.

13 - Set unit so that it is sloped 1/4" toward the drain pan end of the unit. Connect return and supply air plenums as required using sheet metal screws.

14 - If suspending the unit, it must be supported along the entire length of the cabinet. If using chain or strap, use a piece of angle iron or sheet metal attached to the unit (either above or below) so that the full length of the cabinet is supported. Use securing screws no longer than 1/2" to avoid damage to coil or filter, as illustrated in Figure 5. Connect return and supply air plenums as required using sheet metal screws.

DOWNFLOW APPLICATION

NOTE – *If downflow application is required, separately order kit number 28B60 and install per kit's instructions. Also use metal or class I supply and return air plenums.*

Use the installation instruction provided with the downflow kit. For Downflow installation on combustible flooring with a 25KW Electric Heater Only, an additive base (44K15) must be used . See Unit Nameplate or Product Specifications (EHB) for more information.

⚠ IMPORTANT

If electric heat section with circuit breakers (ECB47) is installed in a CBK47UHET unit in a downflow application, the circuit breakers must be rotated 180° to the UP position. See ECB47 installation instructions for more details.

Sensor / Bracket Installation

Vertical Configuration

Leak detection sensor and bracket are factory-installed for vertical installation. No sensor relocation is required if installing in vertical configuration.

NOTE *– The leak detection sensor needs to be relocated for horizontal right, horizontal left, and downflow configurations.*

Horizontal Right Configuration

1 - Remove sensor bracket assembly from vertical position (shown in Figure 8). Do not remove sensor from bracket, and do not disconnect or reroute sensor wire from the control panel area.

Figure 8

2 - Follow instructions for right-hand discharge as outlined in previous section on page 14.

3 - With air handler unit panels removed, install sensor bracket assembly to the unit by lining up holes in the center support bracket as shown in Figure 9. Note: sensor should be facing toward the inside of the unit.

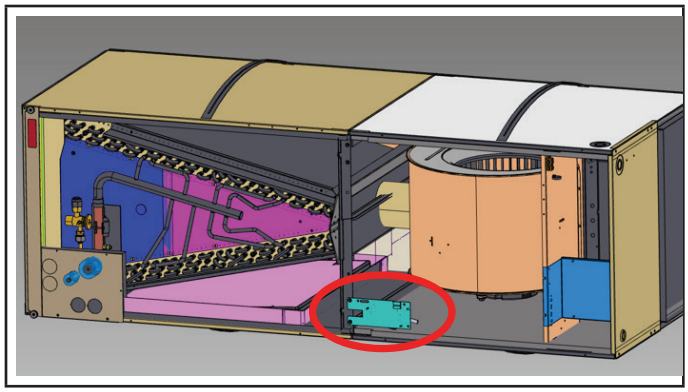

Figure 9

4 - Loop any excess wire through the plastic “M” wire clips located on the inside of the center support bracket.

Horizontal Left Configuration

1 - Remove sensor bracket assembly from vertical position. Do not remove sensor from bracket, and do not disconnect or reroute sensor wire from the control panel area. Set the sensor bracket assembly aside.

2 - Follow instructions for left-hand discharge as outlined in previous section on page 14 and page 15. Instructions are also located on sticker on top of coil assembly.

3 - After coil assembly and center support bracket are reinstalled into unit, with air handler unit panels removed, install sensor bracket assembly to the center support bracket by lining up the holes as shown in Figure 10.

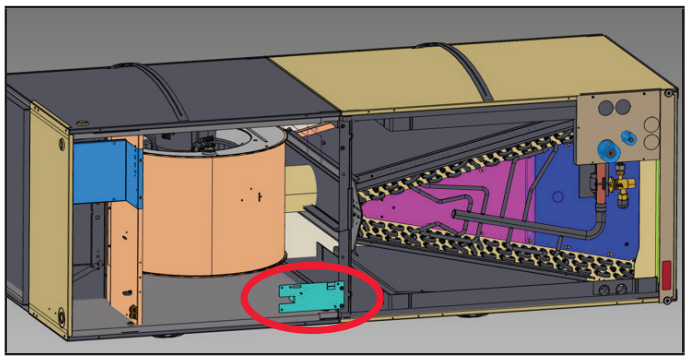

Figure 10

4 - Loop any excess wire through the plastic “M” wire clips located on the inside of the center support bracket.

Downflow Configuration

1 - Remove sensor bracket assembly from vertical position. Do not remove sensor from bracket, and do not disconnect or reroute sensor wire from the control panel area. Set the sensor bracket assembly aside.

2 - Follow the downflow conversion installation instructions located in the downflow installation kit (ordered separately).

***NOTE** – Refer to the downflow kit installation instructions for more details on unit configuration.*

3 - With air handler access panels removed, install sensor bracket assembly to the side of the cabinet by lining up holes as shown in Figure 11.

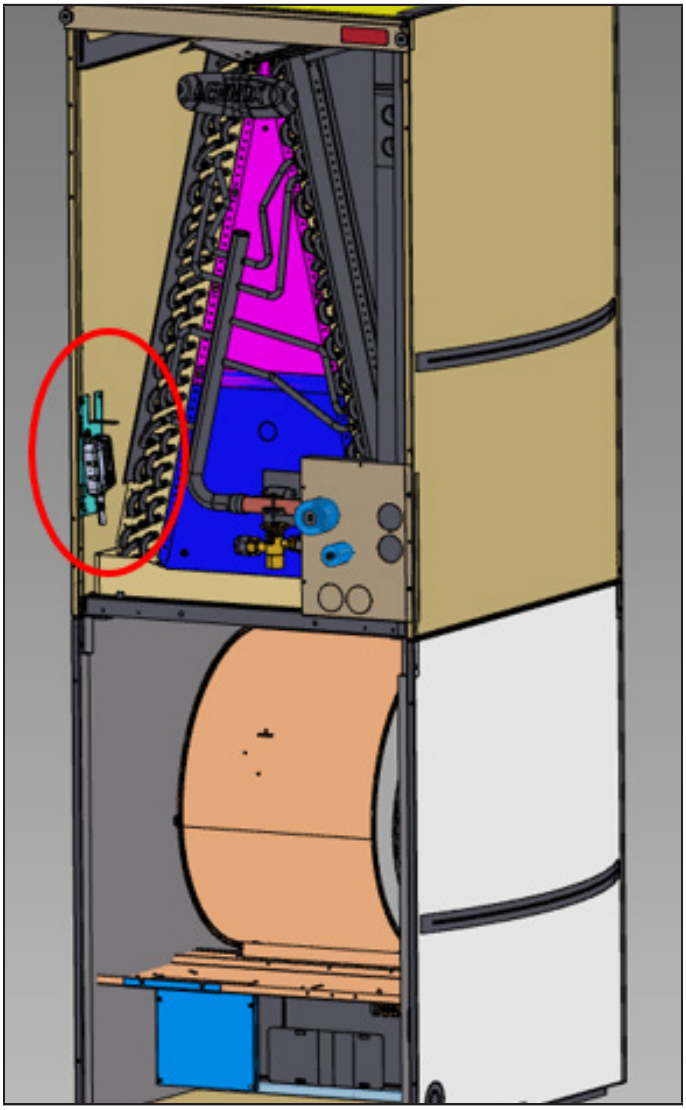

Figure 11

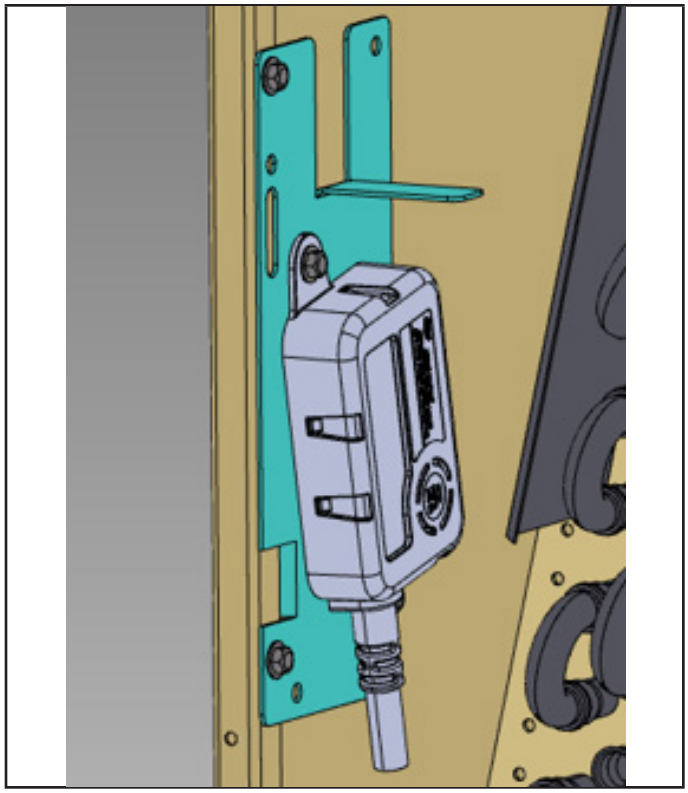

FIGURE 11 (Detail)

4 - Loop and bundle any excess sensor wire with a wire tie.

Brazing Connections

⚠ IMPORTANT

Braze-free fittings must conform with UL207 or ISO14903 (latest edition).

Refrigerant lines must be connected by a qualified technician in accordance with established procedures.

⚠ IMPORTANT

Refrigerant lines must be clean, dry, refrigerant-grade copper lines. Air handler coils should be installed only with specified line sizes for approved system combinations.

Handle the refrigerant lines gently during the installation process. Sharp bends or kinks in the lines will cause a restriction.

Do not remove the caps from the lines or system connection points until connections are ready to be completed.

⚠ IMPORTANT

To prevent the build-up of high levels of nitrogen when purging, it must be done in a well-ventilated area. Purge low-pressure nitrogen (1 to 2 psig) through the refrigerant piping during brazing. This will help to prevent oxidation and the introduction of moisture into the system.

⚠ WARNING

Polyol ester (POE) oils used with R-454B refrigerant absorb moisture very quickly. It is very important that the refrigerant system be kept closed as much as possible. DO NOT remove line set caps or service valve stub caps until you are ready to make connections.

⚠ WARNING

Danger of fire. Bleeding the refrigerant charge from only the high side may result in pressurization of the low side shell and suction tubing. Application of a brazing torch to a pressurized system may result in ignition of the refrigerant and oil mixture. Check the high and low pressures before applying heat.

⚠ CAUTION

Brazing alloys and flux contain materials which are hazardous to your health.

Avoid breathing vapors or fumes from brazing operations. Perform operations only in well ventilated areas.

Wear gloves and protective goggles or face shield to protect against burns.

Wash hands with soap and water after handling brazing alloys and flux.

⚠ WARNING

When using a high pressure gas such as nitrogen to pressurize a refrigeration or air conditioning system, use a regulator that can control the pressure down to 1 or 2 psig (6.9 to 13.8 kPa).

All coils are equipped with a factory-installed, internally mounted check/expansion valve.

The air handler's coil line sizes are listed in table 2. Use Lennox L15 (sweat) series line sets (refer to the outdoor unit Product Specifications (EHB) for proper size, type and application). For field-fabricated refrigerant lines, see the piping section of the Lennox Unit Information Service Manual.

⚠ WARNING

Danger of explosion!

Can cause equipment damage, injury, or death.

When using a high pressure gas such as dry nitrogen to pressurize a refrigeration or air conditioning system, use a regulator that can control the pressure down to 1 or 2 psig (6.9 to 13.8 kPa).

⚠ IMPORTANT

After completion of field piping for split systems, the field pipework shall be pressure tested with an inert gas and then vacuum tested prior to refrigerant charging, according to the following requirements;

– Field-made refrigerant joints indoors shall be tightness tested. The test method shall have a sensitivity of 5 grams per year of refrigerant or better under a pressure of at least 0,25 times the maximum allowable pressure marked on unit nameplate.

No leak shall be detected.

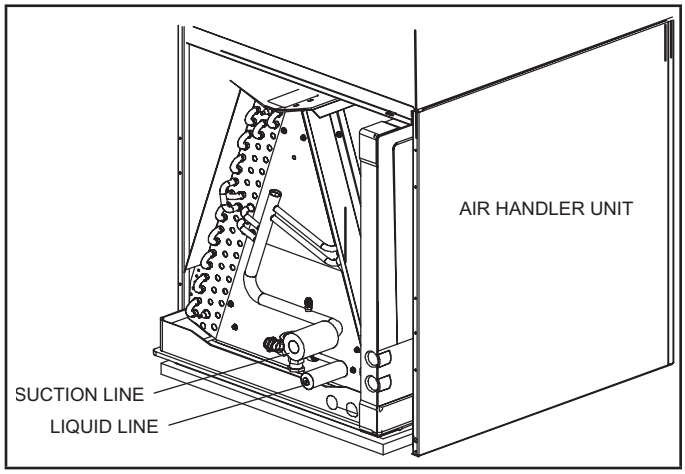

Figure 12. Brazing Connections

NOTE – *CBK47UHET series air handlers use nitrogen or dry air as a holding charge. If there is no pressure when the rubber plugs are removed, check the coil for leaks before installing. After installation, pull a vacuum on the line set and coil before releasing the unit charge into the system.*

NOTE – *See outdoor unit instructions on how to flow nitrogen through line sets.*

1 - Remove access panel.

2 - Remove the refrigerant line caps from the refrigerant lines.

3 - Use a wet rag to protect TXV sensing bulb (or remove it) when brazing suction line connections.

4 - Place a wet rag against piping plate and around the suction line connection. The wet rag must be in place to guard against damage to the paint.

5 - With the wet rag in place, position a field provided elbow fitting to the air handler's suction line and line set. Start nitrogen flow before brazing.

6 - After the procedure is completed then remove the wet rag.

7 - Place wet rag against piping plate and around the liquid line connection. Position liquid line elbow to air handler's suction line and to line set. Start nitrogen flow and begin brazing both connections and after procedure is completed then remove both wet rags.

8 - Refer to instructions provided with outdoor unit for leak testing, evacuating and charging procedures.

9 - Install access panel.

Multiple Systems Installed in Same Space

If multiple systems are installed in the same confined space, and at least one of the systems has A2L refrigerant and an exposed joint (not covered by line set sleeve), then all non-direct vent furnaces in the same space must have a refrigerant detection system with a sensor installed below the level of the burners.

If refrigerant sensor is required, it shall be mounted as follows:

Upflow Applications: Mounted on an unused side furnace return air connection at least 9 inches above the floor and within 9 inches from front of furnace.

Horizontal Applications: Mounted on the lower section of the side return furnace air connection, within 9 inches of both the blower deck and front of furnace.

Downflow Applications: Mounted on one side of the evaporator coil 9 inches above the floor and within 9 inches from front of coil.

Table 4. Refrigerant Line Sizes

Model	Liquid Line	Vapor Line	Line Sets
-018 -024 -030 -036	3/8" (10mm)	3/4" (19mm)	L15 line set sizes are dependant on unit match-up. See Product Specifications (EHB) for outdoor unit to determine correct line set sizes
-042 -048	3/8" (10mm)	7/8" (22mm)	
-060	3/8" (10mm)	7/8" (22mm)	Field fabricated

NOTE *– When installing refrigerant lines longer than 50 feet, see the Lennox Refrigerant Piping Design and Fabrication Guidelines, CORP. 9351-L9, or contact Lennox Technical Support Product Applications for assistance*.

Leak Testing, Evacuating and Charging

Refrigerant system installations shall be installed and tested per ASHRAE Standard 15.2, Section 10.0 (latest edition).

Refer to the outdoor unit instruction for leak testing, evacuating and charging procedures. Always leak check entire system before charging.

Braze-Free Applications

1. Remove bell from the stubbed connection using a tubing cutter.
2. Position the refrigerant piping and follow the assembly instructions provided with the braze-free connector.

PLEASE READ IMPORTANT ISSUES CONCERNING BRAZING

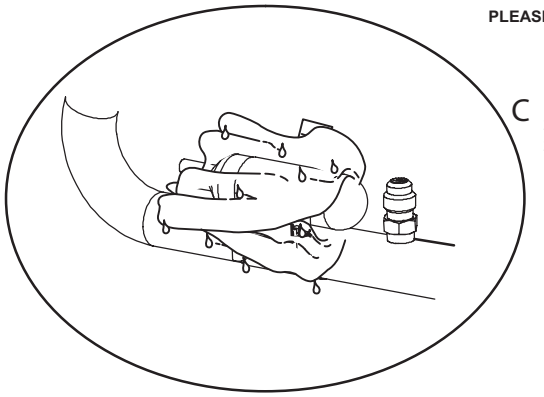

C USE A WET RAG TO PROTECT CTXV SENSING BULB WHEN BRAZING SUCTION LINE CONNECTIONS.

NOTE — REFER TO OUTDOOR UNIT INSTALLATION INSTRUCTIONS FOR REFRIGERANT PIPING SIZE REQUIREMENTS .

NOTE - Use silver alloy brazing rods with five or six percent minimum silver alloy for copper-to-copper brazing, 45 percent alloy for copper-to-brass and copper-to-steel brazing.

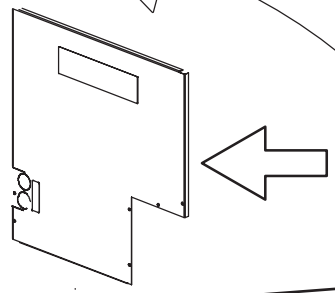

A REMOVE ACCESS PANEL

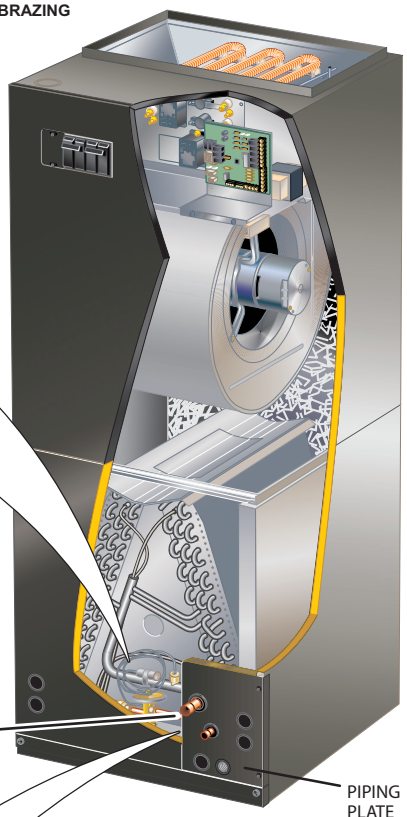

B REMOVE RUBBER PLUG FROM BOTH LIQUID AND SUCTION LINES

NOTE — CBK47UHET SERIES UNITS USE NITROGEN OR DRY AIR AS A HOLDING CHARGE. IF THERE IS NO PRESSURE WHEN THE RUBBER PLUGS ARE REMOVED, CHECK THE COIL FOR LEAKS BEFORE INSTALLING.

PIPING PLATE

D EITHER REMOVE OR PUSH PIPE WRAPPING BACK THROUGH HOLE IN PIPING PLATE BEFORE LINE SET CONNECTION AND BRAZING.

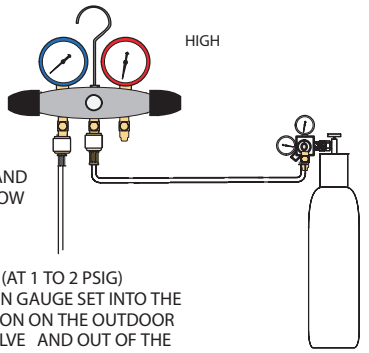

F CONNECT GAUGES AND START NITROGEN FLOW

FLOW REGULATED NITROGEN (AT 1 TO 2 PSIG) THROUGH THE REFRIGERATION GAUGE SET INTO THE VALVE STEM POR T CONNECTION ON THE OUTDOOR UNIT LIQUID LINE SER VICE VALVE AND OUT OF THE VALVE STEM PORT CONNECTION ON THE SUCTION SERVICE VALVE.

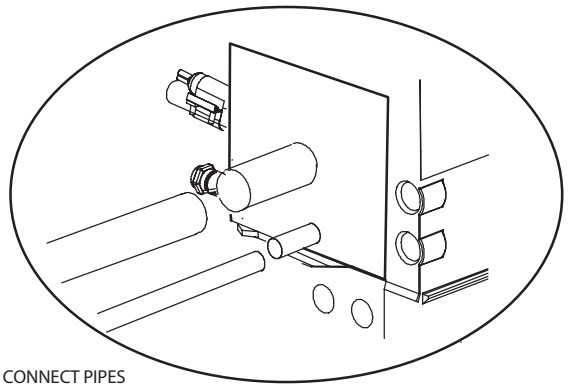

E CONNECT PIPES

NOTE — REFRIGERANT LINE SETS SHOULD BE ROUTED TO ALLOW FILTER ACCESSIBILITY.

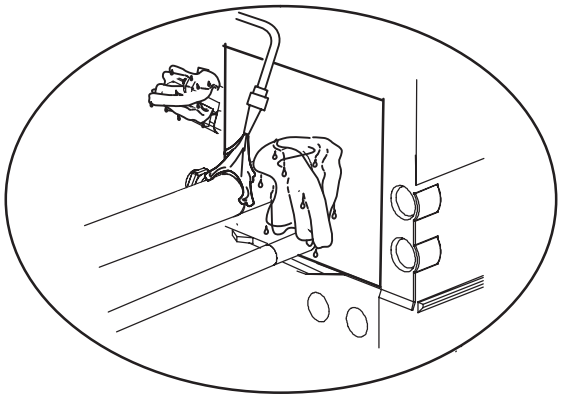

G PLACE A WET RAG AGAINST PIPING PLATE AND AROUND THE SUCTION LINE CONNECTION. A

H BRAZE CONNECTION. ALLOW PIPE TO COOL BEFORE REMOVING WET RAG FROM CTXV SENSING BULB AND PIPING PANEL AREA.

I REPEAT PREVIOUS PROCEDURE FOR LIQUID LINE.

REFER TO INSTRUCTIONS PROVIDED WITH OUTDOOR UNIT FOR LEAK TESTING, EV ACUATING AND CHARGING PROCEDURES

REFRIGERANT SYSTEM INSTALLATIONS SHALL BE INSTALLED AND TESTED PER ASHRAE STANDARD 15.2, SECTION 10.0 (LATEST EDITION)

Installing the Condensate Drain

MAIN DRAIN

Connect the main drain and route downward to drain line or sump. Do not connect drain to a closed waste system. See Figure 14 for typical drain trap configuration.

OVERFLOW DRAIN

It is recommended that the overflow drain is connected to an overflow drain line for all units. If overflow drain is not connected, it must be plugged with provided cap.

For downflow orientation, the overflow drain **MUST** be connected and routed to a overflow drain line. See Figure 13 for main and overflow drain locations based on coil orientation.

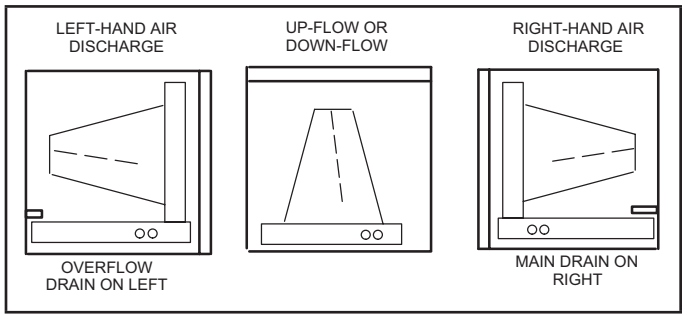

Figure 13. Main and Overflow Drain Locations Based on Coil Orientation

BEST PRACTICES

The following best practices are recommended for the condensate removal process:

- Main and overflow drain lines should **NOT** be smaller than both drain connections at drain pan.
- Overflow drain line should run to an area where homeowner will notice drainage.
- It is recommended that the overflow drain line be vented and a trap installed. Refer to local codes.
- Condensate drain lines must be configured or provided with a cleanout to permit the clearing of blockages and for maintenance without requiring the drain line to be cut.

⚠ IMPORTANT

Confirm primary and secondary drains are open.

TEST CONDENSATE DRAIN

Test the drain pan and drain line after installation:

1 - Pour several quarts of water into drain pan. Use enough water to fill both the drain trap and the line.

2 - Check the installed drain pan. Drain pan must be draining completely. Drain line fittings must not be leaking. Water must be draining from the end of the primary drain line.

3 - Correct any leaks found.

Condensate Drain

⚠ IMPORTANT

On units of this type, where the blower “draws” rather than “blows” air through the coil, traps must be installed in the condensate drain lines (primary and auxiliary, if used). Traps prevent the blower from drawing air through the drain lines into the air supply.

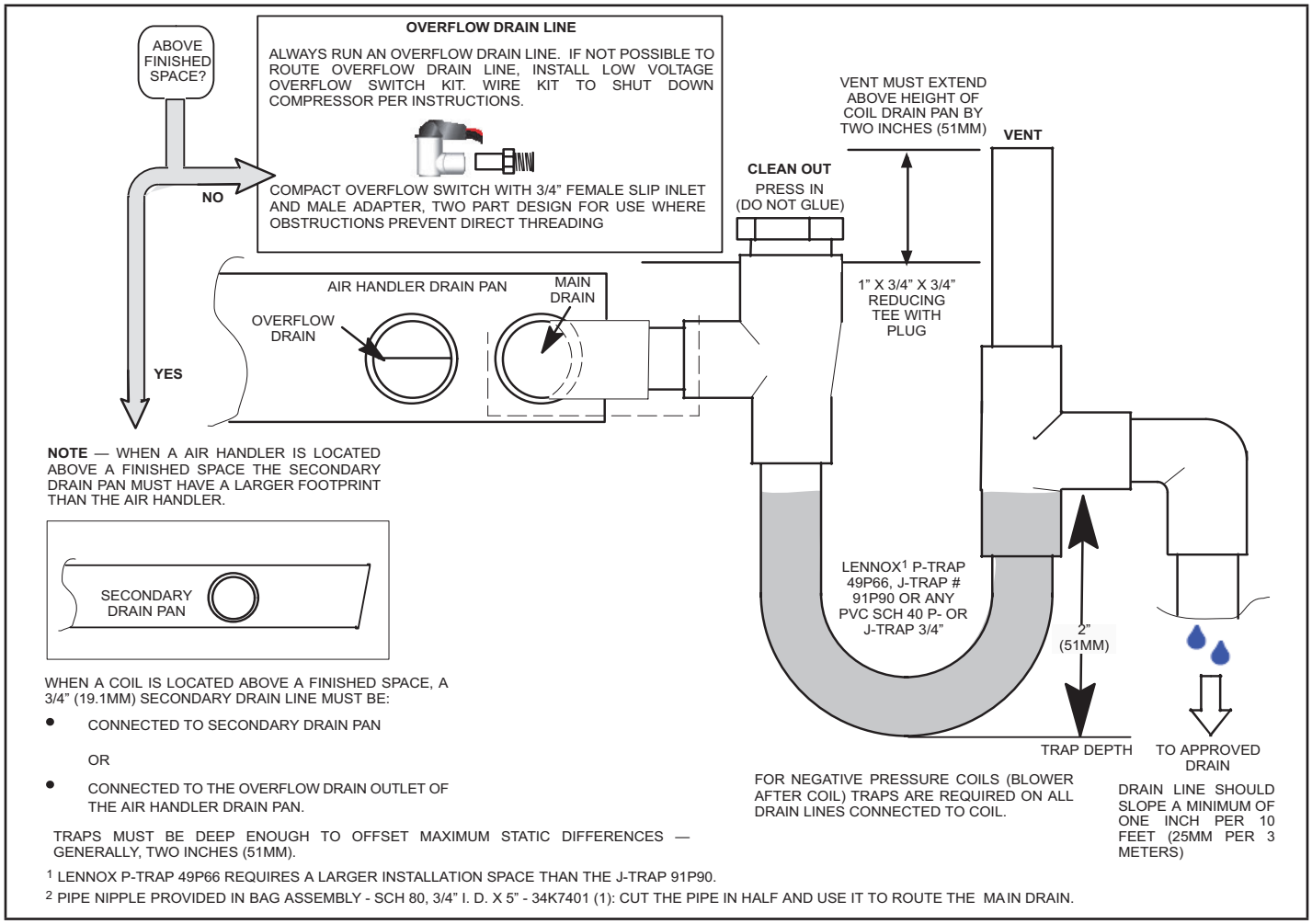

Figure 14. Typical Main and Overflow Drain

⚠ IMPORTANT

A field-fabricated secondary drain pan, with a drain pipe to the outside of the building, is required in all installations over a finished living space or in any area that may be damaged by overflow from the main drain pan. In some localities, local codes may require a secondary drain pan for any horizontal installation.

SLOPING THE UNIT

Make sure the unit is sloped (similar to the slope shown in Figure 15) so that the drain pan will empty completely without water standing in the pan.

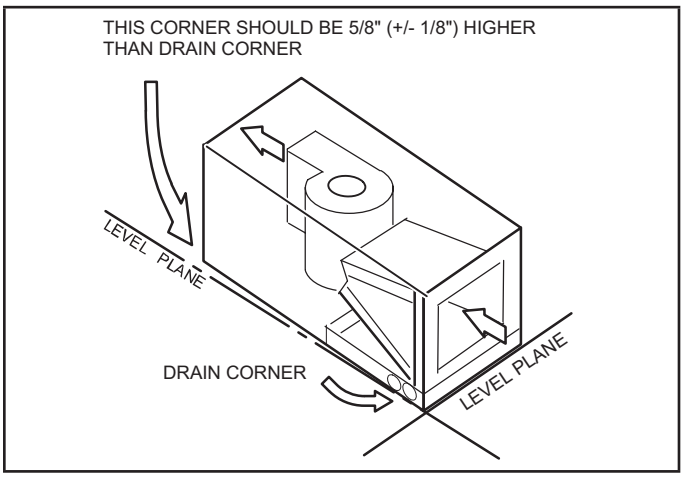

Figure 15. Sloping the Unit for Proper Drainage

Making Electrical Connections

⚠ WARNING

Run 24V Class II wiring only through specified low voltage opening. Run line voltage wiring only through specified high voltage opening. Do not combine voltage in one opening.

⚠ CAUTION

USE COPPER CONDUCTORS ONLY.

⚠ WARNING

Electric Shock Hazard. Can cause injury or death. Unit must be properly grounded in accordance with national and local codes.

Line voltage is present at all components when unit is not in operation on units with single-pole contactors. Disconnect all remote electric power supplies before opening access panel. Unit may have multiple power supplies.

⚠ WARNING

Electric shock hazard! - Disconnect all power supplies before servicing.

Replace all parts and panels before operating.

Failure to do so can result in death or electrical shock.

⚠ WARNING

Electric Shock Hazard.

Can cause injury or death.

Foil-faced insulation has conductive characteristics similar to metal. Be sure there are no electrical connections within a ½" of the insulation. If the foil-faced insulation comes in contact with electrical voltage, the foil could provide a path for current to pass through to the outer metal cabinet. While the current produced may not be enough to trip existing electrical safety devices (e.g. fuses or circuit breakers), the current can be enough to cause an electric shock hazard that could cause personal injury or death.

This unit is provided with knock-outs for conduit. Refer to Figure 1 for unit wiring diagram, which includes all field wiring. Separate openings have been provided for 24V low voltage and line voltage. Refer to the dimension illustration on page 10 and page 11 for specific location.

Wiring must conform to the current National Electric Code ANSI/NFPA No. 70, or Canadian Electric Code Part I, CSA Standard C22.1, and local building codes. Refer to unit wiring diagrams. See unit nameplate for minimum circuit ampacity and maximum overcurrent protection size.

Select the proper supply circuit conductors in accordance with tables 310-16 and 310-17 in the National Electric Code, ANSI/NFPA No. 70 or tables 1 through 4 in the Canadian Electric Code, Part I, CSA Standard C22.1.

The motor speed is set by the speed tap connection to the low voltage terminal strip in the control section. The speed can be increased by swapping wires as shown in Table 5.

⚠ WARNING

Excessive Weight Hazard - Use two or more people when moving and installing the unit. Failure to do so can result in back or other type of injury.

WIRING CONNECTIONS

1 - Install line voltage power supply to unit from a properly installed circuit breaker.

2 - Ground unit at unit disconnect switch or to an earth ground.

NOTE – *Connect conduit to the unit using a proper conduit fitting. Units are approved for use only with copper conductors. A complete unit wiring diagram is located on the back side of the unit's access panel.*

3 - Install low voltage wiring from outdoor to indoor unit and from thermostat to indoor unit.

NOTE – *For proper voltages, select thermostat wire gauge per the following chart:*

Table 5. Run Length (Class II Rated Wiring)

Wire Run Length	AWG #	Insulation / Core Types
Less than 100' (30m)	18	Color coded, temperature rating 95°F (35°C) minimum, solid core
More than 100' (30m)	16	

⚠ CAUTION

ELECTROSTATIC DISCHARGE (ESD) Precautions and Procedures	Electrostatic discharge can affect electronic components. Take care during unit installation and service to protect the unit's electronic controls. Precautions will help to avoid control exposure to electrostatic discharge by putting the unit, the control and the technician at the same electrostatic potential. Touch hand and all tools on an unpainted unit surface before performing any service procedure to neutralize electrostatic charge.

Install room thermostat (ordered separately) on an inside wall approximately in the center of the conditioned area and 5 feet (1.5m) from the floor. It should not be installed on an outside wall or where it can be affected by sunlight or drafts.

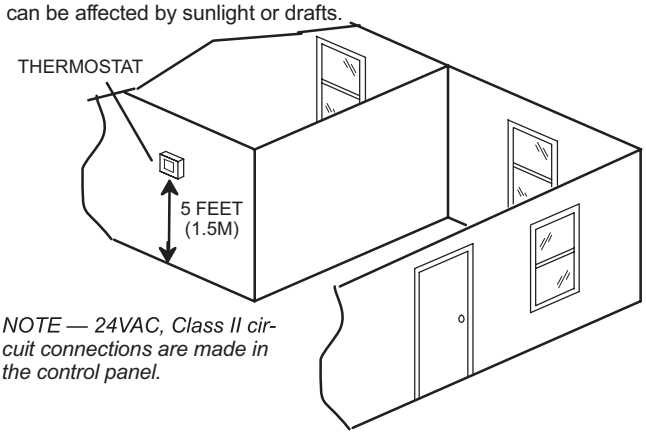

NOTE — 24VAC, Class II circuit connections are made in the control panel.

NOTE — Units are approved for use only with copper conductors. Ground unit at disconnect switch or to an earth ground.

Figure 16. Thermostat Installation

208 VOLT CONVERSION

1 - Disconnect all power supplies.

2 - Remove the air handler access panel.

3 - Using the wiring diagram located on the unit access panel as a reference, move the 2 connected black transformer leads from the 240 volt terminal on the transformer to the 208 volt terminal on the transformer.

⚠ WARNING

Electrically ground air handler. Connect ground wire to ground terminal marked "GND".

Failure to do so can result in death or electrical shock.

208 / 240 VOLT TRANSFORMER

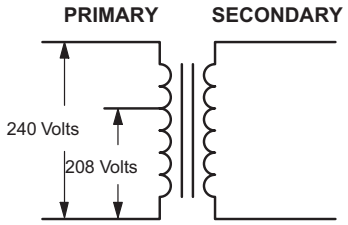

Figure 17. Converting Unit from 240VAC to 208VAC

Inspecting and Replacing Filters

⚠ IMPORTANT

Filter access panel must be in place during unit operation. Excessive warm air entering the unit may result in water blow-off problems.

Filters may be duct-mounted or installed in the cabinet. A filter is installed at the factory. Note that filter access door fits over access panel. Air will leak if the access panel is placed over the filter door.

Filters should be inspected monthly and must be cleaned or replaced when dirty to assure proper air handler operation.

Reusable filters supplied with some units can be washed with water and mild detergent. Some units are equipped with standard throw-away type filters which should be replaced when dirty.

To replace filter:

1 - Loosen the thumbscrews holding the filter panel in place. Remove the dirty filter.

2 - Insert new filter and replace panel.

Table 6. Filter Dimensions

CBK47UHET	Filter Size – In. (mm)
-018, -024, -030, -036	20" x 20" (508mm x 508mm)
-042, -048, -060	20" x 24" (508mm x 610mm)

⚠ IMPORTANT

If a high efficiency filter is being installed as part of this system to ensure better indoor air quality, the filter must be properly sized. High efficiency filters have a higher static pressure drop than standard efficiency glass/foam filters. If the pressure drop is too great, system capacity and performance may be reduced. The pressure drop may also cause the limit to trip more frequently during the winter and the indoor coil to freeze in the summer, resulting in an increase in the number of service calls. Before using any filter with this system, check the specifications provided by the filter manufacturer against the data given in the appropriate Lennox Product Specifications bulletin. Additional information is provided in Service and Application Note ACC002 (August 2000)..

Sealing the Unit

⚠ WARNING

There must be an airtight seal between the bottom of the air handler and the return air plenum. Use fiberglass sealing strips, caulking, or equivalent sealing method between the plenum and the air handler cabinet to ensure a tight seal. Return air must not be drawn from a room where this air handler or any gas-fueled appliance (i.e., water heater), or carbon monoxide-producing device (i.e., wood fireplace) is installed.

Seal the unit so that warm air is not allowed into the cabinet. Warm air introduces moisture, which results in water blow-off problems. This is especially important when the unit is installed in an unconditioned area.

⚠ IMPORTANT

Use duct tape and/ or Permagum to seal closed any space around the holes where the drain lines exit the cabinet. Warm air must not be allowed to enter through any gaps or holes in the cabinet.

Make sure the liquid line and suction line entry points are sealed with either the provided flexible elastomeric thermal insulation, or field provided material (e.g. Armaflex, Permagum or equivalent). Any of the previously mentioned materials may be used to seal around the main and auxiliary drains, and around open areas of electrical inlets.

If installed in an unconditioned space, sealant should be applied around the electrical wires, refrigerant tubing, and condensate lines where they enter the cabinet.

Measuring Static Pressure

1 - Measure tap locations as shown in Figure 18.

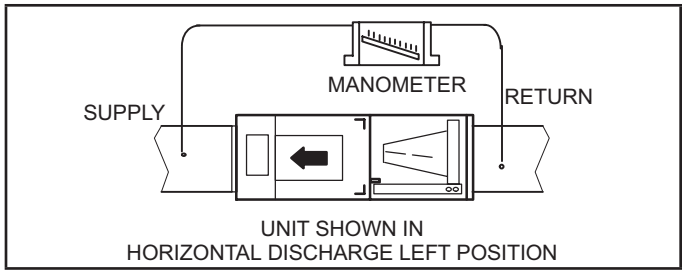

Figure 18. Static Pressure Test

2 - Punch a 1/4" (6mm) diameter hole in supply and return air plenums. Insert manometer hose flush with inside edge of hole or insulation. Seal around the hose with permagum. Connect the zero end of the manometer to the discharge (supply) side of the system. On ducted systems, connect the other end of manometer to the return duct as above. For systems with non-ducted returns, leave the other end of the manometer open to the atmosphere.

3 - With only the blower motor running and the evaporator coil dry, observe the manometer reading. Adjust blower motor speed to deliver the air desired according to the job requirements.

4 - For best air performance external static pressure drop must not exceed 0.5" W.C. (1.2 kPa). Refer to blower data tables for CFM and external static.

5 - Seal around the hole when the check is complete.

Repairing or Replacing Cabinet Insulation

⚠ IMPORTANT

DAMAGED INSULATION MUST BE REPAIRED OR REPLACED before the unit is put back into operation. Insulation loses its insulating value when wet, damaged, separated or torn.

Matte- or foil-faced insulation is installed in indoor equipment to provide a barrier between outside air conditions (surrounding ambient temperature and humidity) and the varying conditions inside the unit. If the insulation barrier is damaged (wet, ripped, torn or separated from the cabinet walls), the surrounding ambient air will affect the inside surface temperature of the cabinet. The temperature/humidity difference between the inside and outside of the cabinet can cause condensation on the inside or outside of the cabinet which leads to sheet metal corrosion and subsequently, component failure.

REPAIRING DAMAGED INSULATION

Areas of condensation on the cabinet surface are an indication that the insulation is in need of repair.

If the insulation in need of repair is otherwise in good condition, the insulation should be cut in an X pattern, peeled open, glued with an appropriate all-purpose glue and placed back against the cabinet surface, being careful to not overly compress the insulation so the insulation can retain its original thickness. If such repair is not possible, replace the insulation. If using foil-faced insulation, any cut, tear, or separations in the insulation surface must be taped with a similar foil-faced tape.

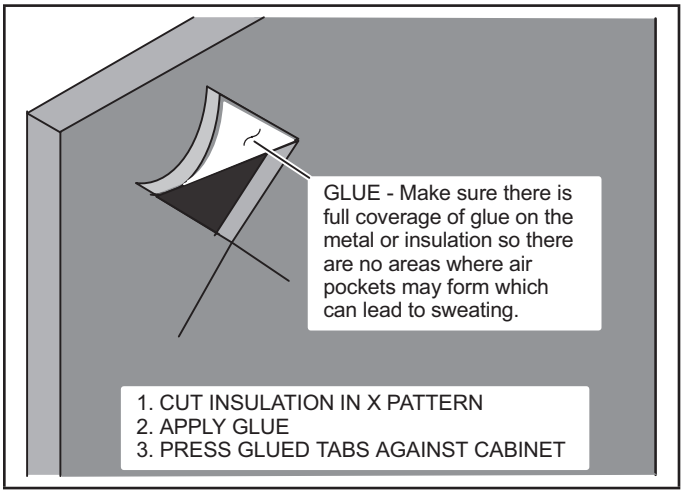

Figure 19. Repairing Insulation

⚠ WARNING

Electric Shock Hazard.

Can cause injury or death.

Foil-faced insulation has conductive characteristics similar to metal. Be sure there are no electrical connections within 1/2" of the insulation. If the foil-faced insulation comes in contact with electrical voltage, the foil could provide a path for current to pass through to the outer metal cabinet. While the current produced may not be enough to trip existing electrical safety devices (e.g., fuses or circuit breakers), the current can be enough to cause an electrical shock hazard that could cause personal injury or death.

Homeowner Maintenance

⚠ IMPORTANT

Do not operate system without a filter. A filter is required to protect the coil, blower, and internal parts from excessive dirt and dust. The filter is placed in the return duct by the installer.

- Inspect air filters at least once a month and replace or clean as required. Dirty filters are the most common cause of inadequate heating or cooling performance.

- Replace disposable filters. Cleanable filters can be cleaned by soaking in mild detergent and rinsing with cold water.
- Install new/clean filters with the arrows on the side pointing in the direction of air flow. Do not replace a cleanable (high velocity) filter with a disposable (low velocity) filter unless return air system is properly sized for it.
- If water should start coming from the secondary drain line, a problem exists which should be investigated and corrected. Contact a qualified service technician.

Professional Maintenance

NOTICE !

Failure to follow instructions will cause damage to the unit.

This unit is equipped with an aluminum coil. Aluminum coils may be damaged by exposure to solutions with a pH below 5 or above 9. The aluminum coil should be cleaned using potable water at a moderate pressure (less than 50psi). If the coil cannot be cleaned using water alone, Lennox recommends use of a coil cleaner with a pH in the range of 5 to 9. The coil must be rinsed thoroughly after cleaning.

In coastal areas, the coil should be cleaned with potable water several times per year to avoid corrosive buildup (salt).

⚠ IMPORTANT

This unit is approved for installation clearance to combustible material as stated on the unit rating plate. Accessibility and service clearances must take precedence over combustible material clearances.

The air handler must be installed so that free access is allowed to the coil/filter compartment and blower/control compartment.

Check-out Procedures

⚠ IMPORTANT

During installation, service or maintenance, make sure that copper tubing does not rub against metal edges or other copper tubing. Care should also be taken to ensure that tubing does not become kinked. Use wire ties to secure tubing to prevent movement.

Do not secure electrical wires to tubing that carries hot refrigerant gas. Heat from the tubing may melt the wiring insulation, causing a short circuit.

NOTE – *Refer to outdoor unit installation instructions for system start-up instructions and refrigerant charging instructions.*

PRE-START-UP CHECKS

- Is the air handler properly and securely installed?
- If horizontally configured, is the unit sloped up to 1/4 inch toward drain lines?
- Will the unit be accessible for servicing?
- Has an auxiliary pan been provided under the unit with separate drain for units installed above a finished ceiling or in any installation where condensate overflow could cause damage?
- Have ALL unused drain pan ports been properly plugged?
- Has the condensate line been properly sized, run, trapped, pitched, and tested?
- Is the duct system correctly sized, run, sealed, and insulated?
- Have all cabinet openings and wiring been sealed?
- Is the indoor coil factory-installed TXV properly sized for the outdoor unit being used?
- Have all unused parts and packaging been disposed of?
- Is the filter clean, in place, and of adequate size?
- Is the wiring neat, correct, and in accordance with the wiring diagram?
- Is the unit properly grounded and protected (fused)?
- Is the thermostat correctly wired and in a good location?
- Are all access panels in place and secure?

CHECK BLOWER OPERATION

- Set thermostat to FAN ON.
- The indoor blower should come on.

CHECK COOLING OPERATION

- Set thermostat to force a call for cooling (approximately 5ºF lower than the indoor ambient temperature).
- The outdoor unit should come on immediately and the indoor blower should start between 30 - 60 seconds later.
- Check the air flow from a register to confirm that the system is moving cooled air.
- Set the thermostat 5ºF higher than the indoor temperature. The indoor blower and outdoor unit should cycle off.

CHECK ELECTRIC HEAT (IF USED)

- Set thermostat to call for auxiliary heat (approximately 5°F above ambient temperature). The indoor blower and auxiliary heat should come on together. Allow a minimum of 3 minutes for all sequencers to cycle on.
- Set the thermostat so that it does not call for heat. Allow up to 5 minutes for all sequencers to cycle off.

Use of Air Handler During Construction

Lennox does not recommend the use of its air handler unit during any phase of construction. Very low return air temperatures, harmful vapors and operation of the unit with clogged or misplaced filters will damage the unit.

Air handler units may be used for heating (heat pumps) or cooling of buildings under construction, if the following conditions are met:

- A room thermostat must control the air handler. The use of fixed jumpers is not allowed.
- Air filter must be installed in the system and must be maintained during construction.
- Air filter must be replaced upon construction completion.
- The air handler evaporator coil, supply fan assembly and duct system must be thoroughly cleaned following final construction clean-up.
- All air handler operating conditions must be verified according to these installation instructions.
- Ensure that sensor opening is clear and free of debris.

Sensor Maintenance

It is recommended to check the state of the sensor every 6 months, at the beginning of each cooling and heating season.

- Ensure that the sensor opening is clear and free of debris.
- Check that the sensor cable is in good condition.
- DO NOT use abrasive cleaning solutions or detergents to clean sensor opening.
- DO NOT use flammable compressed air solutions to clean the sensor opening.
- DO NOT vacuum sensor inlet opening, as this could cause damage to the sensor internal components.
- Replace sensor if the opening is not clean or free of debris
- When cleaning the evaporator coil, remove sensor from the coil. Follow recommended coil cleaning guidelines as described in installation instructions.

Figure 20. Example of Clear, Unobstructed Sensor Inlet

Modes of Operation

The modes of operation for the RDS Non-Communicating Blower Control Board are Initializing, Normal, Leak Detected, and Fault.

Initializing

The RDS Non-Communicating Blower Control Board is establishing connection with the refrigerant detection sensor and is completing an initial five (5) minute purge sequence.

Normal

The HVAC system is functioning normally. The RDS Non-Communicating Blower Control Board has not detected a refrigerant leak.

Leak Detected

When the RDS Non-Communicating Blower Control Board detects a refrigerant leak:

1 - The RDS Non-Communicating Blower Control Board shuts off the (R) input (24VAC power) to the thermostat, which de-energizes the outdoor unit compressor and heat sources, such as gas and/or electric strip heat. No heating or cooling demands will be met.

2 - The RDS Non-Communicating Blower Control Board activates the blower (high speed). The blower purges refrigerant from the cabinet, plenum, and ductwork.

3 - After the RDS Non-Communicating Blower Control Board determines the refrigerant levels are below the safety threshold, the blower will continue to function for an additional seven (7) minutes.

4 - After the blower sequence is complete, the HVAC system resumes normal operation.

***NOTE** – The HVAC system may not maintain a cooling or heating setpoint if a significant leak exists. Any refrigerant leaks that remain unaddressed for an extended time may cause the HVAC system to shut down on a low refrigerant pressure limit condition.*

Fault

When a fault is detected within the RDS Non-Communicating Blower Control Board, the indoor unit blower engages and remains engaged at a constant output until the fault is cleared.

Diagnostic Codes

The RDS Non-Communicating Blower Control Board is equipped with a multicolor LED within its enclosure. The LED signals the state of the RDS Non-Communicating Blower Control Board.

See Table 7 to review the diagnostic codes.

Table 7. LED Diagnostic Codes

State	LED Diagnostic Code	Action
Initializing	Flashing green[1]	Not Applicable
Monitoring	Solid green with blue flash[2]	Not Applicable
Mitigating (Leak Detected)	Flashing blue	Check coil tubes for leak. Repair the issue and restart the equipment.
Fault/Service	Solid blue, interrupted by issue flash code	Refer to Table 8 for troubleshooting steps.

1. A rapid flash indicates the RDSC is in the process of sensor enumeration
2. A blue flash indicates the mitigation process has previously occurred.

Red LED Diagnostic Codes

Red diagnostic codes indicate a specific RDS Non-Communicating Blower Control Board issue. Yellow diagnostic codes indicate the sensor's position (if applicable).

Table 8. Red LED Diagnostic Codes

Red Flash	Applies to Individual Sensor(s)	Issue	Action
1	Yes	Sensor indicates fault	Replace the sensor (Cat. # 26Z69)
2	No	Float switch Active	Check if drain line float switch is installed. If no float switch is installed, check jumper on control board.
3	Yes	Incompatible sensor type	Replace with a compatible sensor (Cat. # 26Z69)
4	Yes	Sensor communications issue	Check sensor connection. Ensure connection is clean and tight.
5	No	R-input not available	Check for 24VAC power connection to the R terminal inputs on the RDSC. R-inputs must be energized for the RDSC to function.

Test Button Functionality

The RDS Non-Communicating Blower Control Board is equipped with a Test/Reset button. The Test button can be used to complete several functions, depending on the mode of operation of the RDS Non-Communicating Blower Control Board.

Table 9 lists the functions of the Test button during each mode of operation.

Table 9. Test Button Function

Mode of Operation	Press the Test Button to...
Normal	Trigger a leak detection response. Verify all equipment is wired correctly into the RDSC (after installation).
Leak Detected	Reset the RDSC to a normal mode of operation after a previous leak has been detected and purged from the HVAC system.
Fault	Reset the RDSC after troubleshooting and resolving a fault condition. If the fault is not resolved, the RDSC will enter the Fault mode again.

Test Button - Additional Functions

Table 10 lists the additional functions of the Test Button while the RDS Non-Communicating Blower Control Board is functioning within the states of Initializing, Monitoring, Leak Detection, Servicing and Fault. Refer to Table 7.

Table 10. Additional Button Functions

State	Press	Action
Initializing	Short	Skips remaining pre-purge after sensors are recognized by the RDSC
Initializing	Long	Reset control
Monitoring	Short	Clear purge-counter if prior mitigation has occurred; Test mitigation
Monitoring	Long	Reset control
Mitigating	Short	If testing mitigation, end test
Servicing	Short	Reevaluate fault condition - if cleared return to monitoring, otherwise update indicator
Servicing	Long	Reset control
Fault	Short	Reevaluate fault condition - if cleared return to monitoring, otherwise update indicator
Fault	Long	Reset control

Thermostat Compatibility

Thermostats that preserve memory settings are compatible with the RDS Non-Communicating Blower Control Board. Examples include:

- Battery-powered thermostats
- Analog thermostats
- Smart thermostats
- Late-model programmable thermostats
- *Early-generation digital and programmable thermostats may not retain the operation mode and temperature setpoints after a power outage.*

The following scenarios are likely to occur when home occupants are not available to adjust the thermostat setpoints as the system is recovering from leak detection and resuming normal operation:

- Heating could be lost during a cold night
- Cooling could be lost during a hot day
- The thermostat could reset to an incorrect temperature setpoint

Compatibility Verification

Complete the following process to determine whether the thermostat is compatible with the RDS Non-Communicating Blower Control Board.

1 - Change the thermostat's current setpoint and operating mode.

2 - Power cycle the breaker to the furnace.

***NOTE** – Wait five (5) minutes before supplying power to the furnace breaker.*

3 - Note whether the thermostat maintained its setpoints and operating mode.

a. If the thermostat maintained the settings, the thermostat is compatible with the RDS Non-Communicating Blower Control Board.
b. If the thermostat did not maintain its setpoint and/or operating mode, the thermostat is not compatible with the RDS Non-Communicating Blower Control Board. Recommend replacing with a compatible thermostat.

Additional Applications

In zoned applications, all dampers will remain open when the RDS Non-Communicating Blower Control Board is in Fault or Leak Detected mode. Normal heating and cooling demands are permissible, but the blower will remain engaged until the fault condition is addressed.

Zone HVAC System

If the RDS Non-Communicating Blower Control Board is installed in a zone HVAC system, the RDS Non-Communicating Blower Control Board will open all zone dampers if a leak is detected.

***NOTE** – Proper wiring of the zone panel to the RDS Non-Communicating Blower Control Board is required for all zone dampers to open.*

After the purge sequence is complete, the zone system will resume normal operation.

External Alarm

(*For applications with external alarms wired directly to the RDS Non-Communicating Blower Control Board.*)

The RDS Non-Communicating Blower Control Board triggers the external alarm system when it enters Leak Detected mode. For alarm notifications, the RDS Non-Communicating Blower Control Board provides a dry relay contact that is rated 3A at 30 VAC/DC.

Start Up Test Procedure

The RDS Non-Communicating Blower Control Board is equipped with a Test/Reset button, see “Test Button Functionality” on page 27 After the RDS Non-Communicating Blower Control Board has been mounted and wired, restore power to the HVAC system. The system will then run through a purge sequence for five (5) minutes. After the purge sequence is complete, proceed to testing cooling demand and heating demand.

Cooling Demand

1 - Prompt a cooling demand at the thermostat.

2 - Press the Test button on the RDS Non-Communicating Blower Control Board.

The system then executes a leak detection response.

3 - Observe the following sequence:

a. The LED indicator flashes the sequence for leak detection (flashing blue).
b. The blower powers up.
c. The outdoor compressor powers down.

4 - Press the Test button to terminate the simulated Leak Detected mode upon test completion.

Heating Demand

1 - Prompt a heating demand at the thermostat.

2 - Press the Test button on the RDS Non-Communicating Blower Control Board.

The system then executes a leak detection response.

3 - Observe the following sequence:

a. The LED indicator flashes the sequence for leak detection (flashing blue).
b. The blower powers up.
c. The gas burners power down.
d. The outdoor compressor powers down.

4 - Press the Test button to terminate the simulated Leak Detected mode upon test completion.

The installation of the RDS Non-Communicating Blower Control Board is complete after both sequences are successfully completed.

Diagnostic Codes and Troubleshooting

Table 11. LED Diagnostic Codes

State	LED Diagnostic Code	Action Required
Initializing	Flashing green	None
Monitoring	Solid green. If a prior mitigation occurred, a blue flash interrupts the solid green LED.	None
Mitigating (Leak Detected)	Flashing blue	Check coil tubes for leak. Repair the issue and restart the equipment.
Fault/Service	Solid blue, interrupted by issue diagnostic code	Refer to Table 12 for troubleshooting steps.

Table 12. Red LED Diagnostic Codes / Troubleshooting

Red Flash	Applies to Individual Sensor(s)	Issue	Action Required
1	Yes	Sensor indicates fault	Replace the sensor

Table 12. Red LED Diagnostic Codes / Troubleshooting

Red Flash	Applies to Individual Sensor(s)	Issue	Action Required
2	No	Float switch Active	Check if drain line float switch is installed. If no float switch is installed, check jumper on control board.
3	Yes	Incompatible sensor type	Replace the sensor
4	Yes	Sensor communications issue	Check sensor connection. Ensure connection is clean and tight.
5	No	R-input not available	Check sensor connections. Ensure connection is clean and tight.

Decommissioning

Before carrying out this procedure, it is essential that the technician is completely familiar with the equipment and all its detail. It is recommended good practice that all refrigerants are recovered safely.

Prior to the task being carried out, an oil and refrigerant sample shall be taken in case analysis is required prior to re-use of recovered refrigerant. It is essential that electrical power is available before starting decommissioning.

a) Become familiar with the equipment and its operation.

b) Isolate system electrically.

c) Before attempting the procedure, ensure that:

- mechanical handling equipment is available, if required, for handling refrigerant cylinders;
- all personal protective equipment is available and being used correctly;
- the recovery process is supervised at all times by a competent person;
- recovery equipment and cylinders conform to the appropriate standards.

d) Pump down refrigerant system, if possible.

e) If a vacuum is not possible, make a manifold so that refrigerant can be removed from various parts of the system.

f) Make sure that cylinder is situated on the scales before recovery takes place.

g) Start the recovery machine and operate in accordance with instructions.

h) Do not overfill cylinders (no more than 80% volume liquid charge).

i) Do not exceed the maximum working pressure of the cylinder, even temporarily.

j) When the cylinders have been filled correctly and the process completed, make sure that the cylinders and the equipment are removed from site promptly and all isolation valves on the equipment are closed off.

k) Recovered refrigerant shall not be charged into another REFRIGERATING SYSTEM unless it has been cleaned and checked.

⚠ IMPORTANT

Equipment shall be labelled stating that it has been decommissioned and emptied of refrigerant. The label shall be signed and dated. Ensure that there are labels on the equipment that state the flammability of the refrigerant used.

Installing Contractor's Name_____ Installing Date_____

Installing Contractor's Phone_____ Air Handler Model #_____

Job Address_____

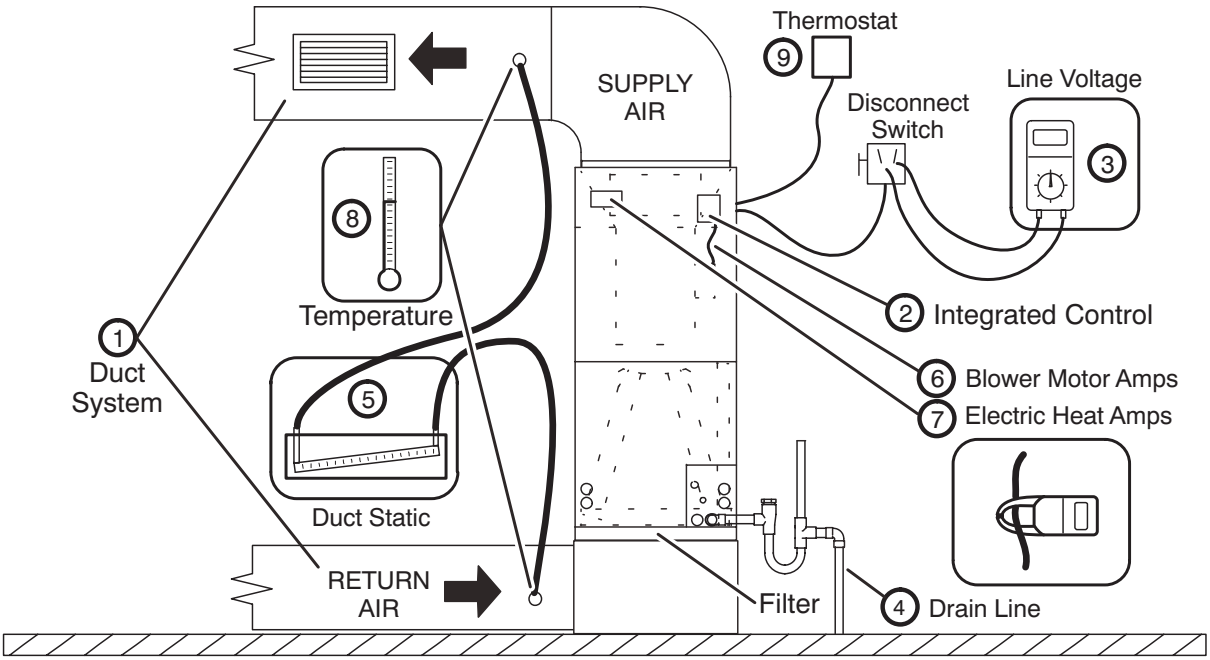

1 DUCT SYSTEM

SUPPLY AIR DUCT

☐ Sealed

☐ Insulated (if necessary)

☐ Registers Open and Unobstructed

RETURN AIR DUCT

☐ Sealed

☐ Filter Installed and Clean

☐ Registers Open and Unobstructed

2 INTEGRATED CONTROL

☐ Jumpers Configured Correctly (if applicable)

☐ Appropriate Links in Place (if applicable)

3 VOLTAGE CHECK

☐ Supply Voltage _____

☐ Low Voltage _____

☐ Electrial Connections Tight

4 DRAIN LINE

☐ Leak Free

5 TOTAL EXTERNAL STATIC (dry coil)

	dry coil	wet coil
Supply External Static	_____	_____
Return External Static	_____	_____
Total External Static =	_____	_____

6 ELECTRIC HEAT AMPS_____

7 INDOOR BLOWER AMPS_____

INDOOR BLOWER CFM_____

8 TEMPERATURE DROP (Cooling Mode)

Return Duct Temperature _____

Supply Duct Temperature – _____

Temperature Drop = _____

8 TEMPERATURE RISE (Heating Mode)

Return Duct Temperature _____

Supply Duct Temperature – _____

Temperature Rise = _____

9 THERMOSTAT

☐ Adjusted and Programmed

☐ Operation Explained to Owner

☐ Explained Operation of System to Homeowner

Technician's Name:_____Date Start–Up & Performance Check Completed_____

Figure 21. Start-up and Performance Checklist (Upflow Configuration)

Installing Contractor's Name_____ Installing Date_____

Installing Contractor's Phone_____ Air Handler Model #_____

Job Address_____

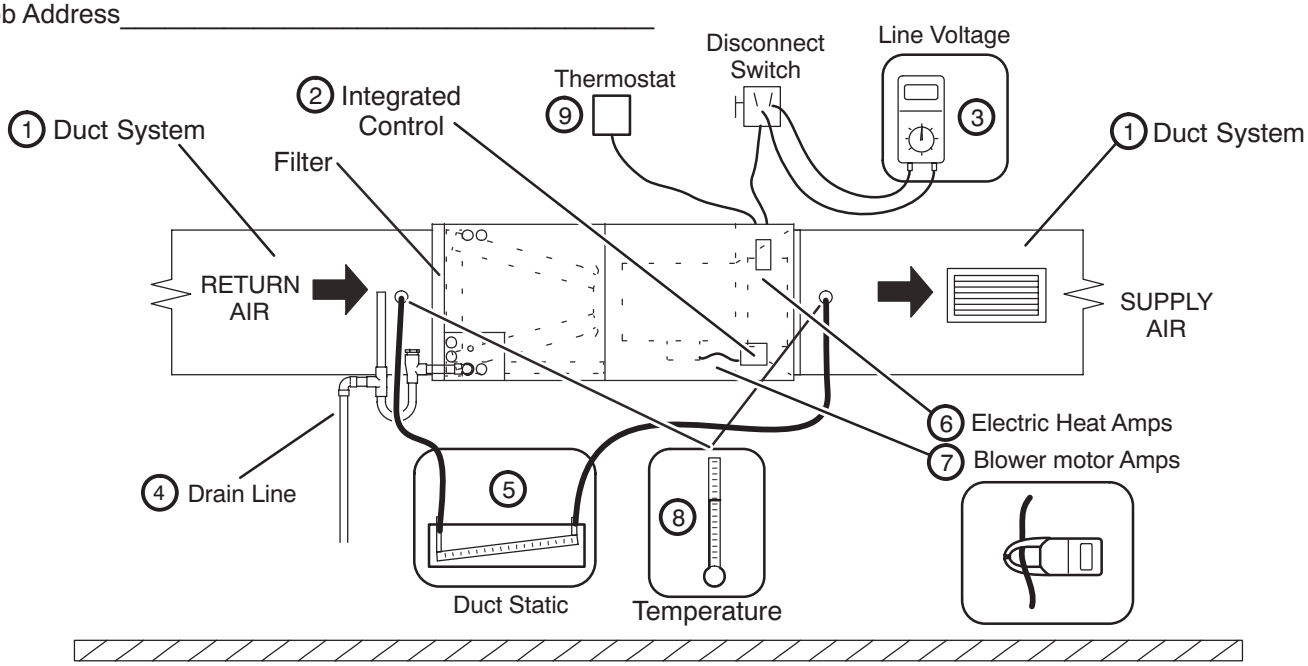

1 DUCT SYSTEM

SUPPLY AIR DUCT

- ☐ Sealed
- ☐ Insulated (if necessary)
- ☐ Registers Open and Unobstructed

RETURN AIR DUCT

- ☐ Sealed
- ☐ Filter Installed and Clean
- ☐ Registers Open and Unobstructed

2 INTEGRATED CONTROL

- ☐ Jumpers Configured Correctly (if applicable)
- ☐ Appropriate Links in Place (if applicable)

3 VOLTAGE CHECK

- ☐ Supply Voltage _____
- ☐ Low Voltage _____
- ☐ Electrial Connections Tight

4 DRAIN LINE

- ☐ Leak Free

5 TOTAL EXTERNAL STATIC (dry coil)

	dry coil	wet coil
Supply External Static	_____	_____
Return External Static	_____	_____
Total External Static =	_____	_____

6 ELECTRIC HEAT AMPS_____

7 INDOOR BLOWER AMPS_____

INDOOR BLOWER CFM_____

8 TEMPERATURE DROP (Cooling Mode)

Return Duct Temperature _____

Supply Duct Temperature – _____

Temperature Drop = _____

8 TEMPERATURE RISE (Heating Mode)

Return Duct Temperature _____

Supply Duct Temperature – _____

Temperature Rise = _____

9 THERMOSTAT

- ☐ Adjusted and Programmed
- ☐ Operation Explained to Owner

☐ Explained Operation of System to Homeowner

Technician's Name:_____Date Start–Up & Performance Check Completed_____

Figure 22. Start-Up and Performance Checklist (Horizontal Configuration)