LRP13ACK

MERIT® SERIES

Constant Torque Blower | Single-Phase | R-454B | 60Hz

RESIDENTIAL
PRODUCT SPECIFICATIONS (EHB)

SEER2 - 13.4
2 to 5 Tons
Cooling Capacity - 22,600 to 57,400 Btuh
Optional Electric Heat - 5 to 20 kW

MERIT® SERIES

MODEL NUMBER IDENTIFICATION

L RP 13 AC K 36 E P -1 -A

- **Brand**: L = Lennox
- **Product Type**: RP = Residential Packaged Unit
- **Nominal SEER2**
- **Unit Type**: AC = Electric/Electric Unit
- **Refrigerant Type**: K = R-454B
- **Nominal Cooling Capacity**:
  - 24 = 2 tons
  - 30 = 2.5 tons
  - 36 = 3 tons
  - 42 = 3.5 tons
  - 48 = 4 tons
  - 60 = 5 tons
- **Blower**: E = High Efficiency Constant Torque Blower Motor
- **Voltage**: P = 208/230V-1phase-60Hz
- **Major Revision Sequence**: 1 = 1st Generation
- **Minor Revision Sequence**: A = 1st Generation

Form Number 211094 | April 2026
Supersedes all previous versions

CONTENTS

Approvals And Warranty 2
Blower Data 13
Control Options 6
Cooling Ratings 11
Dimensions 15
- Accessories 16
- Unit 15
Electrical Data 7
Electric Heat Capacities 10
Electric Heat Data 9
Features 3
Field Wiring 10
Installation Clearances 14
Model Number Identification. 1
Optional Accessories - Order Separately 8
Specifications 7

APPROVALS AND WARRANTY

APPROVALS

- AHRI Standard 210/240-2023 Certified
- Design Certified by ETL Intertek
- Cooling system rated according to DOE test procedures
- Units are ETL Certified for the U.S. and Canada
- Unit and components are UL bonded for grounding to meet safety standards for servicing
- All models meet UL 60335-2-40 Refrigerant Detector Requirements
- All models with the Optional Seismic Strapping Kit installed have Seismic Certification for 2018 International Building Code (IBC) and 2019 California Building Code (CBC) ASCE 7
- Optional electric heaters are ETL listed for the US and Canada and are rated and tested according to DOE test procedures and FTC labeling regulations
- Test operated at the factory before shipment ensuring dependable operation at start-up

WARRANTY

- Compressor:
  - Limited ten years in residential installations
  - Limited five years in non-residential installations
- All other covered components:
  - Limited five years in residential installations
  - Limited one year in non-residential installations

NOTE - Refer to Lennox® Basic Limited Warranty at www.Lennox.com for additional details.

FEATURES

APPLICATIONS

- Designed for outdoor installations at ground level or rooftop for residential applications

COOLING SYSTEM

R-454B Refrigerant
- Low GWP (Global Warming Potential)
- Zero ODP (Ozone Depletion Potential)
- Low Toxicity/Lower Flammability - A2L
- Unit is factory pre-charged

Evaporator and Condenser Coils
- Copper tube with aluminum fin coils

Anti-Microbial Evaporator Coil Drain Pan
- Anti-Microbial additive resists growth of mold and mildew on drain pan which improves indoor air quality and reduces drain line blockage
- Drain pan overflow switch monitors condensate level in drain pan and shuts down unit if drain becomes clogged
- Fully insulated to reduce condensation

Condenser Fan
- Weather protected heavy duty condenser fan motor
- Coated steel fan blades for long life
- Corrosion-resistant coated steel fan guard
- Internally mounted
- Totally enclosed fan motor

High Pressure Switch
- Protects the system from high pressure conditions
- Automatic reset.

Loss of Charge Switch
- Protects compressor from damage from low/no refrigerant charge conditions
- SPST, normally-closed
- Automatic reset

Service Valves
- Fully serviceable brass valves installed in discharge and liquid lines

LOW GWP REFRIGERANT DETECTION SYSTEM (RDS)

- Complies with UL 60335-2-40 approved standard
- Required for all systems using R-454B refrigerant
- Factory installed on all units
- Consists of a leak detection sensor(s) and a mitigation control
- Ensures safe operation for systems equipped with R-454B refrigerant
- Sensor(s) monitors indoor coil area for any refrigerant leaks if they occur
- If a leak is detected the refrigerant detection system will prevent compressor and heating operation until a leak is no longer detected
- Refrigeration detection system energizes blower while a leak is detected to mitigate any concentrations of refrigerant from the unit and the system

COMPRESSOR

- Rotary Compressor furnished on 24 and 30 models
- Scroll Compressor furnished on 36 through 60 models
- High volumetric efficiency
- Uniform suction flow
- Constant discharge flow
- Quiet operation
- Low gas pulses during compression reduces operational sound levels
- Compressor motor is internally protected from excessive current and temperature
- Compressor is installed in the unit on resilient rubber mounts for vibration free operation

Optional Accessories

Compressor Crankcase Heater (36 through 60 models)
- Protects against refrigerant migration that can occur during low ambient operation

Compressor Hard Start Kit
- Single-phase units are equipped with a PSC compressor motor. This type of motor normally doesn't need a potential relay and start capacitor
- In conditions such as low voltage, this kit may be required to increase the compressor starting torque

Compressor Timed-Off Control
- Prevents compressor short-cycling
- Allows time for suction and discharge pressure to equalize
- Permits compressor start-up in an unloaded condition
- Automatic reset
- Five minute delay between compressor shut-off and start-up

Low Ambient Kit (40°F)
- Cycles the outdoor fan while allowing compressor operation in the cooling cycle
- This intermittent fan operation allows the system to operate without icing the evaporator coil and losing capacity
- Designed for use in ambient temperatures no lower than 40°F

NOTE - A crankcase heater must be installed on the compressor.

FEATURES

CABINET

- Conditioned areas insulated with foil faced insulation
- Minimizes heat loss and reduce operating sound levels
- Powder paint for maximum durability
- Easy service access
- Steel louvered panels provides complete coil protection
- Full perimeter heavy-gauge galvanized steel base rail
- Base rails have rigging holes
- Two sides of the base rail have forklift slots
- Raised edges around duct and power entry openings in the bottom of the unit for water protection

Airflow Choice

- Units are shipped with all air openings sealed
  - For downflow (vertical) applications, remove the downflow duct covers
  - For horizontal applications, remove the horizontal duct covers

Electrical Inlets and Service Valves

- Standard field wiring electrical inlets are located in one central area of the cabinet
- See dimension drawing
- Gauge ports are located inside the cabinet

Optional Accessories

Base Rail Opening Closure Kit

- Kit consists of panels and hardware to cover base rail rigging holes and forklift slot openings

Bottom Power Entry Kit

- Allows field wiring through the unit base pan

Rectangular to Round Duct Adaptor Kits

- Downflow or horizontal kits available
- Converts rectangular supply and return air openings on unit cabinet to round diameter
- Several sizes available

Clip Curb (Full Perimeter)

- Interlocking tabs fasten corners together
- No tools required
- Fully gasketed around curb perimeter and supply and return openings
- Available in 8, 14, 18 and 24 inch heights
- Shipped knocked down

Adjustable Pitch Roof Curb (Full Perimeter)

- Fully adjustable pitch curb provides a level platform for packaged units
- Allows flexible installations on roofs with sloped or uneven angles
- Adjustable from 2/12 to 6/12 pitch
- Fully gasketed around curb perimeter and supply and return openings
- Clip Curb (knock-down) and Welded models available

All Curbs

- IBC 2018 compliant
- CBC 2019 compliant
- Seismic rating - SDS 2.0g, z/h=1, Ip=1.5
- Wind rating - 240 mph (Lateral), 214 mph (Uplift)
- Maximum load rating - 800 lbs.

Adaptor Curbs (not shown)

- Curbs are regionally sourced
- Dimensions vary based upon the source

NOTE - Contact your local sales representative for a detailed cut sheet with applicable dimensions.

Strapping Kit - Seismic

- Heavy-gauge galvanized steel
- Kit contains 4 brackets and mounting hardware

FEATURES

AIR FILTER (required)

Optional Accessories

Internal Filter Rack Kits
- Available for 1 in. thick filters
- Filter rails mount internal to unit

NOTE - Filters must be field provided.

SUPPLY AIR BLOWER

- Direct drive blower
- Blower wheel is statically and dynamically balanced
- Resiliently mounted
- Blower assembly easily removed for servicing

Constant Torque Blower Motor
- DC Brushless Motor
- High Efficiency Constant Torque
- ECM (Electronically Commutated Motor)
- Motor is programmed to provide constant torque at each of the selectable speeds
- Fixed blower "On" delay prevents cold air from entering system during gas heating demand
- See Blower Performance tables

ELECTRIC HEAT (5-20 KW)

Optional Accessories

- Field installed internal to unit cabinet
- Available in several voltages and kW sizes
- Helix wound nichrome heating elements exposed directly in air stream
- Instant heat transfer
- Low element temperatures and long service life
- Cutoff limit control provides positive protection in case of excessive temperatures
- Factory assembled with controls installed and wired

Single Point Power Supply Kits
- Control Box used with optional electric heat
- For single power supply connected to multi-circuit electric heat

NOTE - Side power entry only.

CONTROLS

Refrigerant Detection System (RDS) Control
- Monitors leak detection sensor
- Connections for external RDS alarm system (not furnished)
- LED for power, monitoring and sensor status
- Test/Reset button for troubleshooting

24 Volt Transformer
- 40VA transformer furnished and factory installed in control area

Optional Accessories

Thermostat
- Thermostat is not furnished with unit
- See Page 6

CONTROL OPTIONS

E40 Smart Wi-Fi Thermostat

- 3 Htg.-2 Clg.
- 7-day, universal, programmable, touchscreen thermostat
- Controls dehumidification during cooling mode and humidification during heating mode
- Smooth Setback Recovery and compressor short-cycle protection
- One-Touch Away Mode, Smart Away™ (geo-fencing), equipment maintenance reminders and scheduling
- Smart home automation compatible with Amazon Alexa®, Google Assistant, Control4®, Building36®, Matter and IFTTT
- Lennox® Home App controls temperature, fan operation, set programs/schedules and set Away mode on a smartphone
- Lennox Smart Tech App allows the installer to commission the system and remotely turn the system on and off during setup or service call on a smartphone

L40 Smart Wi-Fi Thermostat

- 2 Htg.-1 Clg.
- 7-day, universal, programmable, touchscreen thermostat
- Provides temperature control for gas, electric and heat pumps for single-stage heating or cooling systems (including dual-fuel operation)
- One-Touch Away Mode, Smart Away™ (geo-fencing), equipment maintenance reminders and scheduling
- Smooth Setback Recovery and compressor short-cycle protection
- Smart home automation compatible with Amazon Alexa®, Google Assistant, Control4®, Building36®, Matter and IFTTT
- Lennox® Home App controls temperature, fan operation, set programs/schedules and set Away mode on a smartphone
- Lennox Smart Tech App allows the installer to commission the system and remotely turn the system on and off during setup or service call on a smartphone

NOTE - Two-stage heating for Dual-Fuel Heat Pump applications only

M40 Smart Wi-Fi Thermostat

- 3 Htg.-2 Clg.
- 7-day, universal, programmable, touchscreen thermostat
- Smooth Setback Recovery and compressor short-cycle protection
- One-Touch Away Mode, Smart Away™ (geo-fencing), equipment maintenance reminders and scheduling
- Smart home automation compatible with Amazon Alexa®, Google Assistant, Control4®, Building36®, Matter and IFTTT
- Lennox® Home App controls temperature, fan operation, set programs/schedules and set Away mode on a smartphone
- Lennox Smart Tech App allows the installer to commission the system and remotely turn the system on and off during setup or service call on a smartphone

NOTE - Please refer to the individual Product Specifications for these products for full information.

CONTROLS - ORDERING

E40 Smart Wi-Fi Thermostat	3-3/8 x 5-3/8 x 1	**30L26**
Lennox® Smart Room Sensor	4 x 5-1/2 x 3	**22V25**
Lennox® Smart Air Quality Monitor	3-5/8 x 4-3/8 x 1-3/8	**21P02**
Lennox® Wireless Extender	4 x 5-1/2 x 2-1/2	**22V26**
L40 Smart Wi-Fi Thermostat	2-13/16 x 2-13/16 x 1/4	**27V51**
M40 Smart Wi-Fi Thermostat	3-5/16 x 4-5/16 x 7/8	**30L27**
Thermostat Accessories		
[1] Discharge Air Temperature Sensor (For E40)		**88K38**
[2] Remote Outdoor Air Temperature Sensor (For dual-fuel and Humiditrol®)		**X2658**

[1] Optional for service diagnostics (E40).

[2] Remote Outdoor Air Temperature Sensor is used with conventional (non-Lennox® Communicating) outdoor units (sensor is furnished with Lennox® Communicating outdoor units). Allows the thermostat to display outdoor temperature. Required in dual-fuel and Humiditrol® applications.

SPECIFICATIONS

Size		24	30	36	42	48	60
Nominal Tonnage		2	2.5	3	3.5	4	5
Cooling Performance	Total cooling capacity - Btuh	22,600	28,400	33,400	40,000	44,500	57,500
	[1] SEER2 (Btuh/Watt)	13.4	13.4	13.4	13.4	13.4	13.4
	[1] EER2 (Btuh/Watt)	10.6	10.6	10.6	10.6	10.6	10.6
[2] Sound Rating Number	dBA	77	79	78	78	77	78
Refrigerant	Type	R-454B	R-454B	R-454B	R-454B	R-454B	R-454B
	Charge	4 lbs. 6 oz.	4 lbs. 9 oz.	4 lbs. 8 oz.	5 lbs. 6 oz.	5 lbs. 5 oz.	7 lbs. 13 oz.
Compressor Type (number)		Rotary (1)	Rotary (1)	Scroll (1)	Scroll (1)	Scroll (1)	Scroll (1)
Outdoor Coil	Net face area - ft.^{2}	14.6	16.4	16.4	19.5	19.5	16.6
	Tube diameter - in.	5/16	5/16	5/16	5/16	5/16	5/16
	Rows	1	1	1	1	1	2
	Fins - in.	26	26	26	26	26	22
Outdoor Fan	HP	1/6	1/6	1/6	1/4	1/4	1/4
	Diameter - in.	22	22	22	24	24	24
	Blades	4	4	4	3	3	3
Indoor Coil	Net face area - ft.^{2}	4.4	4.4	4.4	6.8	6.8	6.8
	Tube diameter - in.	3/8	5/16	5/16	5/16	5/16	3/8
	Rows	2	3	3	3	3	3
	Fins - in.	16	16	15	15	15	15
	Condensate drain size (NPT) - in.	3/4	3/4	3/4	3/4	3/4	3/4
Indoor Blower	HP	1/3	1/2	1/2	3/4	3/4	1
	Wheel (Number) diameter x width - in.	(1) 10 x 6	(1) 10 x 6	(1) 10 x 8	(1) 10 x 10	(1) 10 x 10	(1) 12 x 9
Net weight of basic unit - lbs.		367	379	387	460	461	503
Shipping weight of basic unit - lbs.		372	384	392	465	466	508

ELECTRICAL DATA

Line voltage data (Volts-Phase-Hz)		**208/230V-1-60**					
[3] Maximum overcurrent protection (MOCP) amps		20	25	35	40	45	60
[4] Minimum Circuit Ampacity (MCA)		14.8	17.5	22.9	26.5	28.7	39.7
Compressor	Rated load amps	8.8	11.1	14.3	16.7	18.0	24.3
Outdoor Coil Fan Motor	Full load amps	1.0	1.0	1.0	1.7	1.7	1.7
Indoor Blower Motor	Full load amps	2.8	2.6	4.1	3.9	4.5	7.6

NOTE-Extremes of operating range are plus and minus 10% of line voltage.

[1] AHRI Certified to AHRI Standard 210/240; 95°F outdoor air temperature, 80°F db/67°F wb entering evaporator air.

[2] Sound Rating Number rated in accordance with test conditions included in AHRI Standard 270.

[3] HACR type circuit breaker or fuse.

[4] Refer to National or Canadian Electrical Code manual to determine wire, fuse and disconnect size requirements.

OPTIONAL ACCESSORIES - ORDER SEPARATELY

Item		Order Number	Size 24	30	36	42	48	60
COOLING SYSTEM								
Compressor Crankcase Heater		**27U17**			•	•		
		27P79					•	•
Compressor Hard Start Kit		**10J42**	•	•	•			
		88M91				•	•	•
Compressor Timed-Off Control		**47J28**	•	•	•	•	•	•
Low Ambient Kit (40°F)		**21D20**	•	•	•	•	•	•
CABINET								
Base Rail Opening Closure Kit		**21J84**	•	•	•	•	•	•
Rectangular to Round Duct Adaptor Kits	Downflow - 14 in. dia.	**20X82**	•	•	•			
	- 14 in. dia.	**21D26**				•	•	•
	Horizontal - 14 in. dia.	**21J92**	•	•	•			
	- 14 in. dia.	**21D24**				•	•	•
	- 16 in. dia.	**22U78**				•	•	•
	- 18 in. dia.	**22U79**				•	•	•
ELECTRICAL								
Bottom Power Entry Kit		**21J78**	•	•	•	•	•	•
ELECTRIC HEAT								
208/230V-1ph	5 kW	**10W47**	•	•	•	•	•	•
	7.5 kW	**10W48**	•	•	•	•	•	•
	10 kW	**10W49**	•	•	•	•	•	•
	15 kW	**10W50**			•	•	•	•
	20 kW	**10W51**				•	•	•
SINGLE POINT POWER SUPPLY KITS (FOR ELECTRIC HEAT) - SIDE POWER ENTRY ONLY								
	For 5 kW Electric Heat	**13W88**	•	•	•	•	•	•
	For 7.5 kW Electric Heat	**13W89**	•	•	•	•	•	•
	For 10 kW Electric Heat	**13W90**	•	•	•	•	•	•
	For 15 and 20 kW Electric Heat	**13W91**			•	•	•	•
INDOOR AIR QUALITY								
[1] Internal Filter Rack Kit (filters not furnished)	(1) 20 x 20 + (1) 14 x 20	**11U73**	•	•	•			
	(2) 20 x 20	**11U74**				•	•	•
ROOF CURBS								
Clip Curbs								
	8 in height	**21J13**	•	•	•			
		21J17				•	•	•
	14 in height	**21J14**	•	•	•			
		21J19				•	•	•
	18 in height	**21J15**	•	•	•			
		21J20				•	•	•
	24 in height	**21J16**	•	•	•			
		21J25				•	•	•
Adjustable Pitch Roof Curbs								
Welded Curbs		**22V54**	•	•	•			
		22V55				•	•	•
Clip Curbs		**21J26**	•	•	•			
		21U04				•	•	•
Strapping Kits for Roof Curbs								
Strapping Kit - Seismic		**21J75**	•	•	•	•	•	•

[1] Filters are not furnished and must be field provided.

ELECTRIC HEAT DATA

Model			LRP13ACK24		LRP13ACK30		LRP13ACK36	
Voltage			208V	240V	208V	240V	208V	240V
[1] Maximum Overcurrent Protection (MOCP)	5 kW	Circuit 1	30	30	30	30	30	35
	7.5 kW	Circuit 1	40	45	40	45	40	45
	10 kW	Circuit 1	50	60	50	60	60	60
	15 kW	Circuit 1	- - -	- - -	- - -	- - -	60	60
		Circuit 2	- - -	- - -	- - -	- - -	25	30
[2] Minimum Circuit Ampacity (MCA)	5 kW	Circuit 1	26.1	29.5	25.8	29.3	26.6	30.0
	7.5 kW	Circuit 1	37.4	42.6	37.1	42.3	39.0	44.2
	10 kW	Circuit 1	48.6	55.6	48.4	55.3	50.3	57.2
	15 kW	Circuit 1	- - -	- - -	- - -	- - -	50.3	57.2
		Circuit 2	- - -	- - -	- - -	- - -	22.6	26
[1] Maximum Overcurrent Protection (MOCP) with Optional Single Point Power Supply		5 kW	30	30	30	30	30	35
		7.5 kW	40	45	40	45	40	45
		10 kW	50	60	50	60	60	60
		15 kW	- - -	- - -	- - -	- - -	80	90
[2] Minimum Circuit Ampacity (MCA) with Optional Single Point Power Supply		5 kW	26.1	29.5	25.8	29.3	22.7	31.2
		7.5 kW	37.4	42.6	37.1	42.3	39.0	44.2
		10 kW	48.6	55.6	48.4	55.3	50.3	57.2
		15 kW	- - -	- - -	- - -	- - -	72.8	83.3

Model No.			LRP13ACK42		LRP13ACK48		LRP13ACK60	
Voltage			208V	240V	208V	240V	208V	240V
[1] Maximum Overcurrent Protection (MOCP)	5 kW	Circuit 1	35	35	35	35	30	35
	7.5 kW	Circuit 1	40	45	40	45	45	50
	10 kW	Circuit 1	60	60	60	60	60	70
		Circuit 2	- - -	- - -	- - -	- - -	- - -	- - -
	15 kW	Circuit 1	60	60	60	60	60	70
		Circuit 2	25	30	25	30	25	30
	20 kW	Circuit 1	60	60	60	60	60	70
		Circuit 2	50	60	50	60	50	60
[2] Minimum Circuit Ampacity (MCA)	5 kW	Circuit 1	30.1	33.5	30.1	33.5	27.8	31.3
	7.5 kW	Circuit 1	38.7	43.9	39.5	44.7	43.4	48.6
	10 kW	Circuit 1	50.0	57.0	50.8	57.7	54.6	61.6
		Circuit 2	- - -	- - -	- - -	- - -	- - -	- - -
	15 kW	Circuit 1	50.0	57.0	50.8	57.7	54.6	61.6
		Circuit 2	22.6	26	22.6	26	22.6	26
	20 kW	Circuit 1	50.0	57.0	50.8	57.7	54.6	61.6
		Circuit 2	45.1	52.1	45.1	52.1	45.1	52.1
[1] Maximum Overcurrent Protection (MOCP) with Optional Single Point Power Supply		5 kW	30	35	30	35	60	60
		7.5 kW	40	45	40	45	50	50
		10 kW	60	60	60	60	60	70
		15 kW	80	90	80	90	80	90
		20 kW	100	110	100	110	100	125
[2] Minimum Circuit Ampacity (MCA) with Optional Single Point Power Supply		5 kW	27.4	30.9	28.2	31.7	39.7	39.7
		7.5 kW	38.7	43.9	39.5	44.7	43.4	48.6
		10 kW	50.0	57.0	50.8	57.7	54.6	61.6
		15 kW	72.6	83.0	73.3	83.8	77.2	87.6
		20 kW	95.2	109.0	95.9	109.8	99.8	113.7

NOTE - All units have a minimum Short Circuit Current Rating (SCCR) of 5000 amps.

NOTE - Circuit 1 Minimum Circuit Ampacity includes the Blower Motor Full Load Amps.

NOTE- Extremes of operating range are plus and minus 10% of line voltage.

[1] HACR type breaker or fuse.

[2] Refer to National or Canadian Electrical Code manual to determine wire, fuse and disconnect size requirements.

ELECTRIC HEAT CAPACITIES

Input Voltage	5 kW			7.5 kW			10 kW			15 kW			20 kW		
	No of Steps	kW Input	KBtuh Output	No of Steps	kW Input	KBtuh Output	No of Steps	kW Input	KBtuh Output	No of Steps	kW Input	KBtuh Output	No of Steps	kW Input	KBtuh Output
208	1	3.8	12.8	1	5.6	19.2	1	7.5	25.6	1	11.2	38.2	1	15	51.2
220	1	4.2	14.3	1	6.3	21.5	1	8.4	28.7	1	12.6	43	1	16.8	57.3
230	1	4.6	15.7	1	6.9	23.5	1	9.2	31.3	1	13.8	47	1	18.4	62.7
240	1	5	17.1	1	7.5	25.6	1	10	34.1	1	15	51.2	1	20	68.2

FIELD WIRING

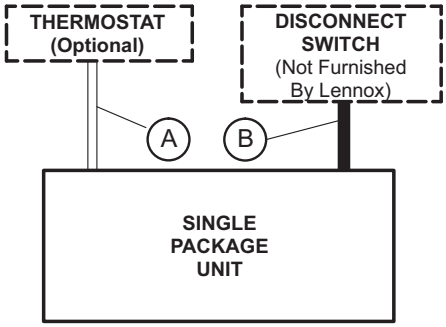

A − Five Wire Low Voltage (Electronic)
B − Two Wire Power (See Electrical Data Table)

If multiple disconnects are used on units with electric heat; there must be two−wire power provided for each disconnect

− Field Wiring Not Furnished −

COOLING RATINGS

NOTE − For Temperatures and Capacities not shown in tables, see bulletin − Cooling Unit Rating Table Correction Factor Data in Miscellaneous Engineering Data section.

2 TON - LRP13ACK024

Entering Wet Bulb Temperature	Total Air Volume	Outdoor Air Temperature Entering Outdoor Coil																			
		85°F					95°F					105°F					115°F				
		Total Cool Cap.	Comp. Motor Input	Sensible To Total Ratio (S/T) Dry Bulb			Total Cool Cap.	Comp. Motor Input	Sensible To Total Ratio (S/T) Dry Bulb			Total Cool Cap.	Comp. Motor Input	Sensible To Total Ratio (S/T) Dry Bulb			Total Cool Cap.	Comp. Motor Input	Sensible To Total Ratio (S/T) Dry Bulb		
	cfm	kBtuh	kW	75°F	80°F	85°F	kBtuh	kW	75°F	80°F	85°F	kBtuh	kW	75°F	80°F	85°F	kBtuh	kW	75°F	80°F	85°F
59°F	650	21.4	1.35	.89	1.00	1.00	20.6	1.52	.91	1.00	1.00	19.8	1.71	.93	1.00	1.00	18.9	1.93	.96	1.00	1.00
	830	23.2	1.35	.96	1.00	1.00	22.2	1.52	.98	1.00	1.00	21.4	1.72	1.00	1.00	1.00	20.2	1.94	1.00	1.00	1.00
	1000	24.4	1.34	1.00	1.00	1.00	23.4	1.52	1.00	1.00	1.00	22.2	1.72	1.00	1.00	1.00	21.2	1.94	1.00	1.00	1.00
63°F	650	22.4	1.35	.74	.86	.98	21.4	1.52	.76	.88	1.00	20.4	1.71	.77	.90	1.00	19.3	1.93	.79	.92	1.00
	830	23.6	1.34	.79	.93	1.00	22.6	1.52	.80	.95	1.00	21.4	1.72	.82	.97	1.00	20.2	1.94	.84	1.00	1.00
	1000	24.6	1.34	.83	.99	1.00	23.4	1.52	.85	1.00	1.00	22.4	1.72	.87	1.00	1.00	21.2	1.94	.90	1.00	1.00
67°F	650	23.8	1.34	.60	.72	.84	22.8	1.52	.61	.73	.85	21.6	1.72	.62	.75	.87	20.4	1.94	.63	.77	.90
	830	25.0	1.34	.63	.77	.90	24.0	1.52	.64	.78	.92	22.6	1.72	.66	.81	.95	21.4	1.95	.67	.83	.98
	1000	26.0	1.33	.66	.81	.96	24.6	1.52	.68	.83	.98	23.2	1.72	.69	.85	1.00	22.0	1.95	.71	.88	1.00
71°F	650	25.0	1.34	.46	.59	.70	23.8	1.52	.47	.59	.72	22.6	1.72	.47	.61	.73	21.4	1.95	.49	.62	.75
	830	26.4	1.33	.48	.62	.75	25.2	1.52	.49	.63	.76	23.8	1.72	.49	.65	.79	22.4	1.95	.50	.67	.81
	1000	27.4	1.32	.50	.65	.79	26.0	1.51	.51	.67	.81	24.6	1.72	.51	.68	.84	23.2	1.96	.52	.70	.86

2.5 TON - LRP13ACK030

Entering Wet Bulb Temperature	Total Air Volume	Outdoor Air Temperature Entering Outdoor Coil																			
		85°F					95°F					105°F					115°F				
		Total Cool Cap.	Comp. Motor Input	Sensible To Total Ratio (S/T) Dry Bulb			Total Cool Cap.	Comp. Motor Input	Sensible To Total Ratio (S/T) Dry Bulb			Total Cool Cap.	Comp. Motor Input	Sensible To Total Ratio (S/T) Dry Bulb			Total Cool Cap.	Comp. Motor Input	Sensible To Total Ratio (S/T) Dry Bulb		
	cfm	kBtuh	kW	75°F	80°F	85°F	kBtuh	kW	75°F	80°F	85°F	kBtuh	kW	75°F	80°F	85°F	kBtuh	kW	75°F	80°F	85°F
59°F	800	27.4	1.65	.94	1.00	1.00	26.4	1.87	.97	1.00	1.00	25.2	2.10	.99	1.00	1.00	23.8	2.37	1.00	1.00	1.00
	1000	29.2	1.66	1.00	1.00	1.00	28.0	1.88	1.00	1.00	1.00	27.0	2.12	1.00	1.00	1.00	25.4	2.40	1.00	1.00	1.00
	1200	30.6	1.66	1.00	1.00	1.00	29.4	1.88	1.00	1.00	1.00	28.0	2.13	1.00	1.00	1.00	26.6	2.41	1.00	1.00	1.00
63°F	800	28.4	1.66	.78	.91	1.00	27.2	1.87	.80	.93	1.00	25.6	2.11	.81	.96	1.00	24.2	2.37	.84	.99	1.00
	1000	29.6	1.66	.84	.99	1.00	28.2	1.88	.86	1.00	1.00	27.0	2.12	.88	1.00	1.00	25.4	2.40	.91	1.00	1.00
	1200	30.6	1.66	.90	1.00	1.00	29.4	1.88	.92	1.00	1.00	28.0	2.13	.95	1.00	1.00	26.6	2.41	.98	1.00	1.00
67°F	800	30.0	1.66	.63	.76	.88	28.6	1.88	.64	.78	.91	27.2	2.13	.65	.80	.93	25.6	2.40	.67	.82	.96
	1000	31.4	1.66	.67	.82	.96	29.8	1.89	.68	.84	.99	28.2	2.14	.69	.86	1.00	26.6	2.41	.72	.90	1.00
	1200	32.2	1.66	.71	.88	1.00	30.6	1.89	.73	.90	1.00	29.0	2.15	.74	.93	1.00	27.4	2.43	.76	.96	1.00
71°F	800	31.6	1.66	.49	.62	.74	30.2	1.89	.50	.63	.76	28.8	2.14	.50	.64	.78	27.2	2.42	.51	.66	.80
	1000	33.0	1.66	.52	.66	.80	31.4	1.89	.51	.68	.82	29.8	2.15	.53	.69	.85	28.2	2.44	.54	.71	.88
	1200	34.0	1.66	.53	.70	.86	32.4	1.89	.54	.72	.88	30.6	2.16	.55	.74	.91	28.8	2.44	.57	.77	.95

3 TON - LRP13ACK036

Entering Wet Bulb Temperature	Total Air Volume	Outdoor Air Temperature Entering Outdoor Coil																			
		85°F					95°F					105°F					115°F				
		Total Cool Cap.	Comp. Motor Input	Sensible To Total Ratio (S/T) Dry Bulb			Total Cool Cap.	Comp. Motor Input	Sensible To Total Ratio (S/T) Dry Bulb			Total Cool Cap.	Comp. Motor Input	Sensible To Total Ratio (S/T) Dry Bulb			Total Cool Cap.	Comp. Motor Input	Sensible To Total Ratio (S/T) Dry Bulb		
	cfm	kBtuh	kW	75°F	80°F	85°F	kBtuh	kW	75°F	80°F	85°F	kBtuh	kW	75°F	80°F	85°F	kBtuh	kW	75°F	80°F	85°F
59°F	1000	32.4	2.01	.94	1.00	1.00	31.4	2.27	.96	1.00	1.00	30.0	2.57	.98	1.00	1.00	28.6	2.91	1.00	1.00	1.00
	1200	34.2	2.01	1.00	1.00	1.00	33.0	2.28	1.00	1.00	1.00	31.8	2.58	1.00	1.00	1.00	30.2	2.92	1.00	1.00	1.00
	1440	35.8	2.02	1.00	1.00	1.00	34.6	2.29	1.00	1.00	1.00	33.0	2.58	1.00	1.00	1.00	31.6	2.93	1.00	1.00	1.00
63°F	1000	33.8	2.01	.78	.91	1.00	32.2	2.28	.79	.93	1.00	30.8	2.57	.81	.96	1.00	29.4	2.92	.83	.98	1.00
	1200	34.8	2.02	.83	.97	1.00	33.6	2.28	.84	.99	1.00	32.0	2.58	.86	1.00	1.00	30.2	2.92	.89	1.00	1.00
	1440	36.0	2.02	.88	1.00	1.00	34.6	2.29	.90	1.00	1.00	33.0	2.58	.92	1.00	1.00	31.6	2.93	.95	1.00	1.00
67°F	1000	35.6	2.02	.63	.76	.88	34.0	2.28	.64	.78	.90	32.6	2.58	.65	.79	.93	30.8	2.92	.66	.81	.96
	1200	36.8	2.02	.66	.80	.95	35.2	2.29	.67	.82	.97	33.6	2.59	.69	.84	.99	31.8	2.93	.70	.87	1.00
	1440	37.8	2.02	.70	.86	1.00	36.2	2.29	.71	.88	1.00	34.4	2.59	.73	.91	1.00	32.4	2.93	.75	.94	1.00
71°F	1000	37.4	2.02	.49	.62	.74	36.0	2.29	.49	.63	.75	34.2	2.59	.50	.64	.77	32.6	2.93	.51	.66	.79
	1200	38.5	2.03	.51	.65	.79	37.0	2.30	.51	.66	.81	35.4	2.60	.52	.68	.83	33.4	2.94	.53	.70	.85
	1440	39.5	2.03	.53	.69	.84	38.0	2.30	.53	.71	.86	36.2	2.60	.55	.73	.89	34.4	2.94	.57	.75	.92

COOLING RATINGS

NOTE − For Temperatures and Capacities not shown in tables, see bulletin − Cooling Unit Rating Table Correction Factor Data in Miscellaneous Engineering Data section.

3.5 TON - LRP13ACK042

Entering Wet Bulb Temperature	Total Air Volume	Outdoor Air Temperature Entering Outdoor Coil																			
		85°F					95°F					105°F					115°F				
		Total Cool Cap.	Comp. Motor Input	Sensible To Total Ratio (S/T) Dry Bulb			Total Cool Cap.	Comp. Motor Input	Sensible To Total Ratio (S/T) Dry Bulb			Total Cool Cap.	Comp. Motor Input	Sensible To Total Ratio (S/T) Dry Bulb			Total Cool Cap.	Comp. Motor Input	Sensible To Total Ratio (S/T) Dry Bulb		
	cfm	kBtuh	kW	75°F	80°F	85°F	kBtuh	kW	75°F	80°F	85°F	kBtuh	kW	75°F	80°F	85°F	kBtuh	kW	75°F	80°F	85°F
59°F	1200	41.0	2.49	.95	1.00	1.00	39.5	2.81	.96	1.00	1.00	37.8	3.16	.98	1.00	1.00	36.4	3.56	1.00	1.00	1.00
	1450	43.5	2.48	1.00	1.00	1.00	42.0	2.80	1.00	1.00	1.00	40.0	3.15	1.00	1.00	1.00	38.5	3.56	1.00	1.00	1.00
	1750	45.5	2.47	1.00	1.00	1.00	44.0	2.79	1.00	1.00	1.00	42.0	3.15	1.00	1.00	1.00	40.0	3.56	1.00	1.00	1.00
63°F	1200	42.5	2.49	.78	.92	1.00	40.5	2.80	.79	.94	1.00	38.5	3.16	.81	.96	1.00	36.8	3.56	.83	.98	1.00
	1450	44.0	2.48	.83	.98	1.00	42.5	2.80	.84	.99	1.00	40.0	3.15	.87	1.00	1.00	38.5	3.56	.89	1.00	1.00
	1750	46.0	2.47	.89	1.00	1.00	44.0	2.79	.91	1.00	1.00	42.0	3.15	.93	1.00	1.00	40.5	3.56	.96	1.00	1.00
67°F	1200	44.5	2.47	.63	.76	.89	43.0	2.79	.64	.78	.91	41.0	3.15	.65	.79	.93	39.0	3.56	.65	.81	.96
	1450	46.5	2.46	.66	.81	.95	44.5	2.79	.68	.83	.97	42.5	3.15	.68	.85	.99	40.0	3.56	.71	.87	1.00
	1750	48.0	2.45	.70	.87	1.00	45.5	2.78	.72	.89	1.00	43.5	3.14	.72	.92	1.00	41.5	3.56	.74	.94	1.00
71°F	1200	47.0	2.46	.48	.62	.74	45.0	2.78	.49	.63	.76	43.5	3.14	.50	.64	.77	41.0	3.56	.51	.66	.79
	1450	49.0	2.44	.50	.65	.80	47.0	2.77	.51	.67	.82	44.5	3.14	.52	.68	.83	42.5	3.56	.53	.69	.86
	1750	50.5	2.43	.53	.70	.86	48.0	2.76	.53	.71	.88	46.0	3.13	.55	.73	.90	43.5	3.55	.56	.75	.94

4 TON - LRP13ACK048

Entering Wet Bulb Temperature	Total Air Volume	Outdoor Air Temperature Entering Outdoor Coil																			
		85°F					95°F					105°F					115°F				
		Total Cool Cap.	Comp. Motor Input	Sensible To Total Ratio (S/T) Dry Bulb			Total Cool Cap.	Comp. Motor Input	Sensible To Total Ratio (S/T) Dry Bulb			Total Cool Cap.	Comp. Motor Input	Sensible To Total Ratio (S/T) Dry Bulb			Total Cool Cap.	Comp. Motor Input	Sensible To Total Ratio (S/T) Dry Bulb		
	cfm	kBtuh	kW	75°F	80°F	85°F	kBtuh	kW	75°F	80°F	85°F	kBtuh	kW	75°F	80°F	85°F	kBtuh	kW	75°F	80°F	85°F
59°F	1300	43.5	2.59	.94	1.00	1.00	42.0	2.96	.96	1.00	1.00	40.5	3.37	.98	1.00	1.00	38.5	3.84	1.00	1.00	1.00
	1600	46.0	2.60	1.00	1.00	1.00	44.5	2.97	1.00	1.00	1.00	42.5	3.39	1.00	1.00	1.00	40.5	3.85	1.00	1.00	1.00
	1900	48.0	2.62	1.00	1.00	1.00	46.5	2.99	1.00	1.00	1.00	44.5	3.40	1.00	1.00	1.00	42.5	3.86	1.00	1.00	1.00
63°F	1300	45.0	2.60	.77	.91	1.00	43.5	2.97	.79	.92	1.00	41.0	3.38	.80	.95	1.00	39.0	3.85	.83	.98	1.00
	1600	47.0	2.61	.83	.98	1.00	45.0	2.98	.84	1.00	1.00	43.0	3.39	.86	1.00	1.00	41.0	3.86	.89	1.00	1.00
	1900	48.0	2.62	.88	1.00	1.00	46.5	2.99	.90	1.00	1.00	45.0	3.40	.92	1.00	1.00	42.5	3.86	.95	1.00	1.00
67°F	1300	47.5	2.61	.63	.75	.88	45.5	2.98	.63	.77	.90	43.5	3.39	.64	.79	.92	41.0	3.86	.66	.81	.95
	1600	49.5	2.62	.66	.81	.95	47.5	2.99	.67	.83	.97	45.0	3.40	.69	.85	1.00	43.0	3.86	.70	.87	1.00
	1900	51.0	2.63	.70	.86	1.00	49.0	3.00	.71	.88	1.00	46.5	3.40	.72	.91	1.00	44.0	3.87	.75	.93	1.00
71°F	1300	50.0	2.62	.48	.61	.73	48.0	2.99	.49	.62	.75	46.0	3.40	.49	.63	.77	43.5	3.86	.50	.65	.79
	1600	52.0	2.63	.51	.65	.79	50.0	3.00	.51	.66	.81	47.5	3.41	.52	.68	.83	45.0	3.87	.53	.70	.86
	1900	53.5	2.63	.53	.69	.85	51.0	3.00	.54	.70	.87	48.5	3.41	.54	.72	.89	46.0	3.87	.56	.74	.92

5 TON - LRP13ACK060

Entering Wet Bulb Temperature	Total Air Volume	Outdoor Air Temperature Entering Outdoor Coil																			
		85°F					95°F					105°F					115°F				
		Total Cool Cap.	Comp. Motor Input	Sensible To Total Ratio (S/T) Dry Bulb			Total Cool Cap.	Comp. Motor Input	Sensible To Total Ratio (S/T) Dry Bulb			Total Cool Cap.	Comp. Motor Input	Sensible To Total Ratio (S/T) Dry Bulb			Total Cool Cap.	Comp. Motor Input	Sensible To Total Ratio (S/T) Dry Bulb		
	cfm	kBtuh	kW	75°F	80°F	85°F	kBtuh	kW	75°F	80°F	85°F	kBtuh	kW	75°F	80°F	85°F	kBtuh	kW	75°F	80°F	85°F
59°F	1450	55.5	3.47	.89	1.00	1.00	54.0	3.92	.91	1.00	1.00	51.5	4.43	.93	1.00	1.00	49.5	5.02	.95	1.00	1.00
	1800	60.0	3.49	.96	1.00	1.00	57.5	3.95	.98	1.00	1.00	55.0	4.46	1.00	1.00	1.00	53.0	5.06	1.00	1.00	1.00
	2100	62.5	3.50	1.00	1.00	1.00	60.0	3.96	1.00	1.00	1.00	58.0	4.48	1.00	1.00	1.00	55.0	5.08	1.00	1.00	1.00
63°F	1450	58.5	3.49	.74	.86	.98	56.5	3.94	.76	.88	1.00	54.0	4.44	.77	.90	1.00	51.0	5.03	.79	.93	1.00
	1800	61.5	3.50	.79	.93	1.00	58.5	3.95	.81	.95	1.00	56.0	4.47	.82	.98	1.00	53.5	5.06	.85	1.00	1.00
	2100	63.5	3.51	.83	.98	1.00	60.5	3.96	.85	1.00	1.00	57.5	4.48	.87	1.00	1.00	55.5	5.08	.90	1.00	1.00
67°F	1450	61.5	3.50	.60	.72	.83	59.5	3.96	.61	.73	.85	56.5	4.47	.62	.75	.87	53.5	5.06	.63	.77	.89
	1800	65.0	3.51	.64	.77	.90	61.5	3.97	.65	.79	.92	59.5	4.49	.66	.81	.95	56.0	5.09	.67	.83	.98
	2100	66.5	3.52	.67	.81	.96	64.0	3.98	.68	.83	.99	60.5	4.50	.69	.86	1.00	57.5	5.10	.71	.88	1.00
71°F	1450	65.0	3.51	.47	.59	.70	62.5	3.97	.48	.60	.71	59.5	4.49	.48	.61	.73	56.5	5.09	.49	.62	.75
	1800	67.5	3.52	.49	.63	.75	65.5	3.99	.50	.64	.77	62.0	4.51	.50	.65	.79	59.0	5.12	.52	.67	.81
	2100	69.5	3.53	.51	.66	.80	67.0	4.00	.52	.67	.82	63.5	4.52	.53	.69	.84	60.5	5.13	.54	.71	.86

BLOWER DATA

Model	Blower Tap	Air Volume (cfm) at Various External Static Pressures - in. w.g.									
		0.1	0.2	0.3	0.4	0.5	0.6	0.7	0.8	0.9	1.0
LRP13ACK24	Tap 1 (Fan Only)	610	560	525	485	430	- - -	- - -	- - -	- - -	- - -
	Tap 2 (Low Cooling)	820	795	760	720	690	650	615	575	540	470
	Tap 3 (High Cooling)	960	925	885	850	815	780	745	710	675	635
LRP13ACK30	Tap 1 (Fan Only)	850	820	780	745	710	680	630	590	550	515
	Tap 2 (Low Cooling)	1040	1000	970	935	900	875	845	815	770	735
	Tap 3 (High Cooling)	1140	1105	1075	1045	1015	1000	965	925	890	825
LRP13ACK36	Tap 1 (Fan Only)	850	800	750	700	645	600	550	480	435	- - -
	Tap 2 (Low Cooling)	1245	1210	1175	1140	1100	1065	1025	975	920	845
	Tap 3 (High Cooling)	1390	1355	1320	1285	1250	1205	1165	1125	1050	875
LRP13ACK42	Tap 1 (Fan Only)	800	720	640	550	475	390	310	- - -	- - -	- - -
	Tap 2 (Low Cooling)	1470	1410	1360	1300	1260	1210	1155	1095	1000	940
	Tap 3 (High Cooling)	1600	1555	1510	1470	1430	1390	1340	1265	1210	1155
LRP13ACK48	Tap 1 (Fan Only)	1145	1075	1000	930	850	790	740	670	570	490
	Tap 2 (Low Cooling)	1675	1630	1600	1540	1490	1440	1390	1300	1230	1125
	Tap 3 (High Cooling)	1775	1735	1700	1660	1605	1555	1515	1455	- - -	- - -
LRP13ACK60	Tap 1 (Fan Only)	1045	970	895	820	745	665	580	480	- - -	- - -
	Tap 2 (Low Cooling)	1855	1810	1770	1725	1680	1630	1595	1550	- - -	- - -
	Tap 3 (High Cooling)	1965	1920	1875	1835	1785	1750	1710	1665	1615	1570

NOTE - All air data is measured external to unit with dry coil and without air filters.

BLOWER DATA

ACCESSORY AIR RESISTANCE DATA - in. w.g.

Air Volume cfm	Rectangular to Round Duct Adaptor Kits					
	Downflow		Horizontal			
	14 in. Diameter		14 in. Diameter		16 in. Diameter	18 in. Diameter
	24, 30, 36	42, 48, 60	24, 30, 36	42, 48, 60	42, 48, 60	42, 48, 60
500	0.03	- - -	0.04	- - -	- - -	- - -
600	0.05	- - -	0.07	- - -	- - -	- - -
700	0.08	0.13	0.08	0.13	- - -	- - -
800	0.10	0.17	0.12	0.16	- - -	- - -
900	0.12	0.21	0.15	0.21	- - -	- - -
1000	0.17	0.24	0.19	0.25	0.11	0.03
1100	0.18	0.30	0.23	0.30	0.11	0.03
1200	0.20	0.36	0.29	0.37	0.13	0.03
1300	0.26	0.43	0.31	0.43	0.17	0.03
1400	0.31	0.50	0.39	0.51	0.20	0.03
1500	- - -	0.57	- - -	0.57	0.21	0.05
1600	- - -	0.63	- - -	0.65	0.26	0.05
1700	- - -	0.71	- - -	0.72	0.30	0.06
1800	- - -	0.80	- - -	0.81	0.30	0.06
1900	- - -	0.91	- - -	0.90	0.40	0.06
2000	- - -	0.99	- - -	1.01	0.41	0.06

INSTALLATION CLEARANCES

	in.	mm
Front (heat exchanger access)	24	610
Right Side (blower access)	24	610
Left Side (evaporator coil access)	24	610
Back	0	0
Top	48	1219

DIMENSIONS UNIT

Size	CORNER WEIGHTS								CENTER OF GRAVITY			
	AA		BB		CC		DD		EE		FF	
	lbs.	kg	lbs.	kg	lbs.	kg	lbs.	kg	in.	mm	in.	mm
24	86	39	96	44	105	48	94	43	21	533	21-1/2	546
30	89	40	99	45	108	49	97	44	21	533	21-1/2	546
36	91	41	101	46	110	50	99	45	21	533	21-1/2	546
42	108	49	119	54	129	59	118	54	25-1/4	641	21-1/2	546
48	109	49	120	54	130	59	119	54	25-1/4	641	21-1/2	546
60	118	54	129	59	140	64	129	59	25-1/4	641	21-1/2	546

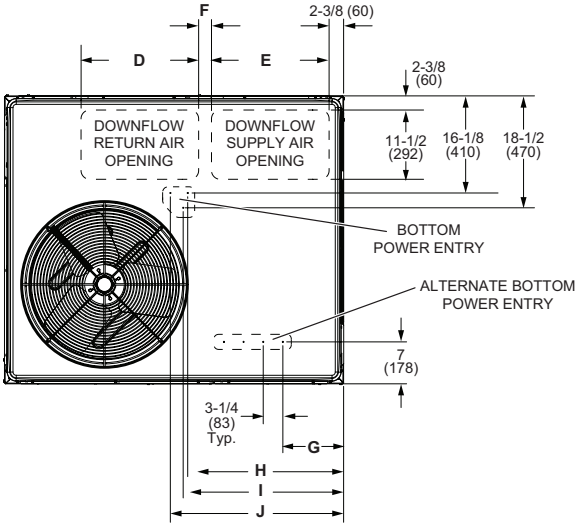

TOP VIEW (Base)

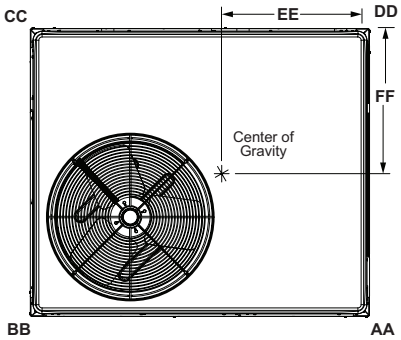

TOP VIEW
(Corner Weight and Center of Gravity)

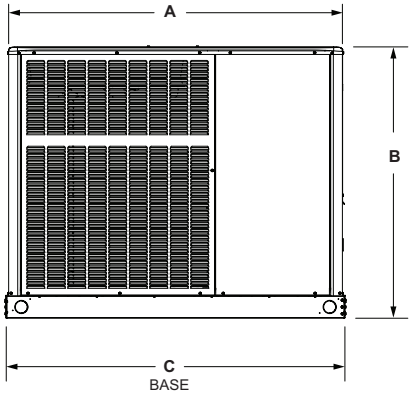

FRONT VIEW

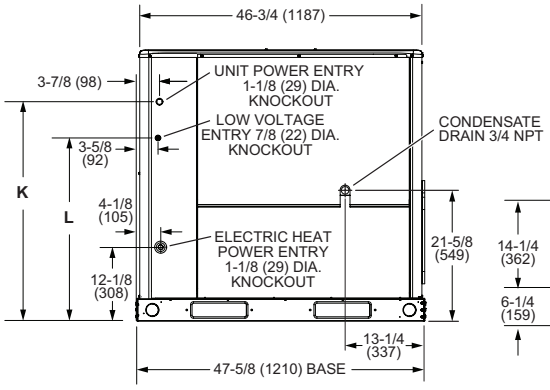

RIGHT SIDE VIEW

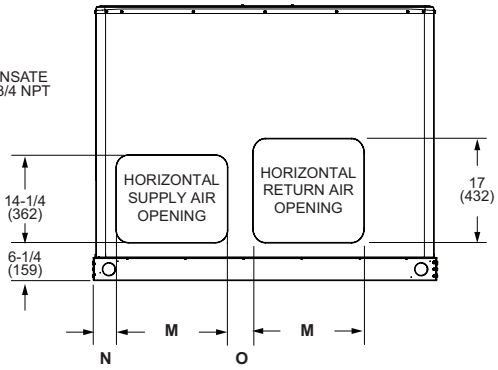

BACK VIEW

Size	A		B		C		D		E		F		G		H	
	in.	mm	in.	mm	in.	mm	in.	mm	in.	mm	in.	mm	in.	mm	in.	mm
24, 30, 36	47-5/8	1210	40-7/8	1038	47-5/8	1210	16-3/4	425	14	356	2	51	4-1/2	114	20-1/4	514
42, 48, 60	55-1/4	1403	44-7/8	1140	56-1/8	1426	19-1/2	495	19-1/2	495	2-1/8	54	10	254	25-7/8	657

Size	I		J		K		L		M		N		O	
	in.	mm	in.	mm	in.	mm	in.	mm	in.	mm	in.	mm	in.	mm
24, 30, 36	21	533	23-1/4	591	32-1/4	819	26-1/4	667	13-1/2	343	3-1/8	79	5-7/8	149
42, 48, 60	26-1/2	673	26-3/4	679	36-1/4	921	30-1/4	768	18-1/4	463	3-3/4	95	4-3/8	111

CLIP CURB

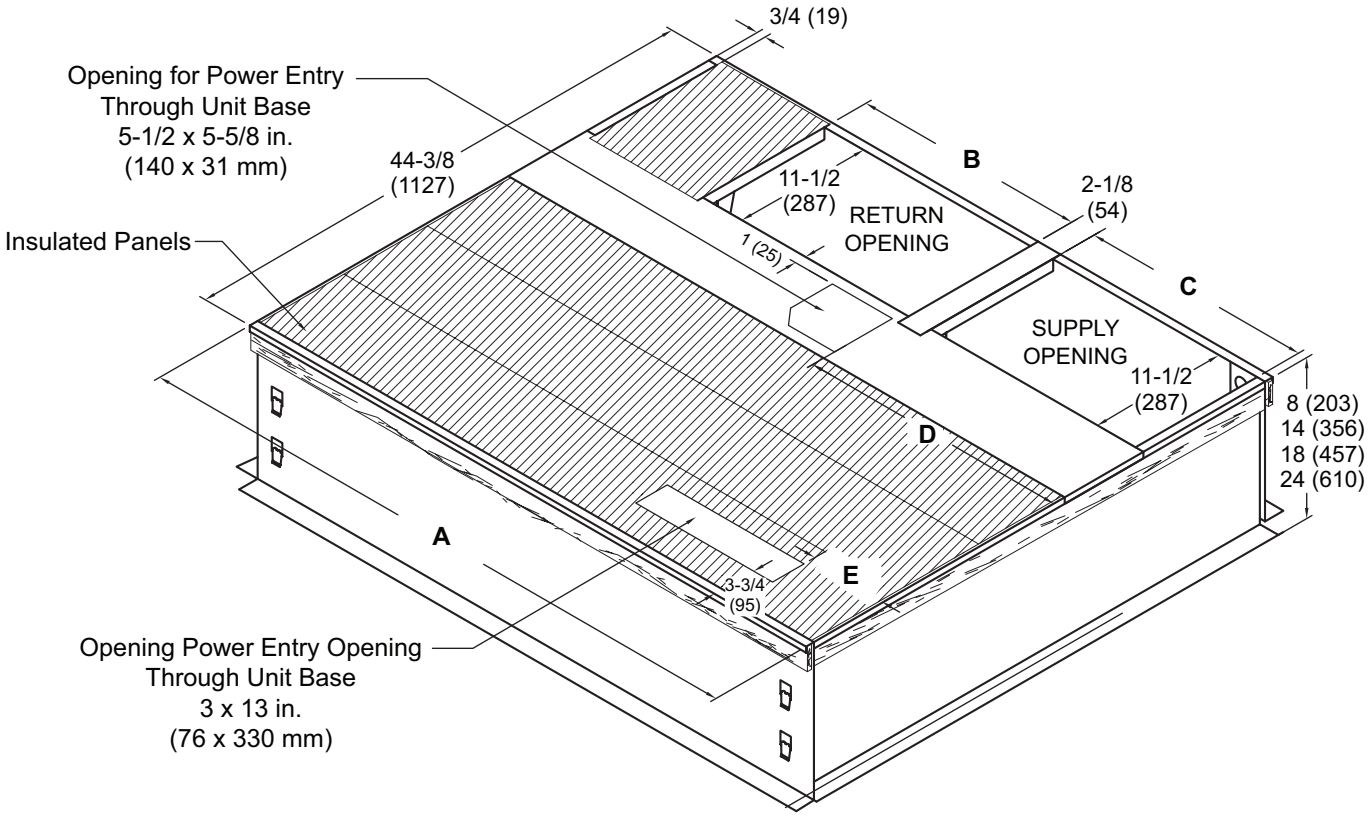

NOTE - Roof deck may be omitted within confines of curb.

TYPICAL FLASHING DETAIL FOR ROOF CURB

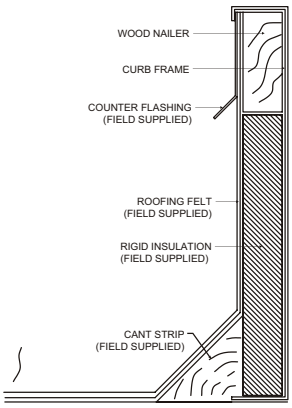

DETAIL ROOF CURB

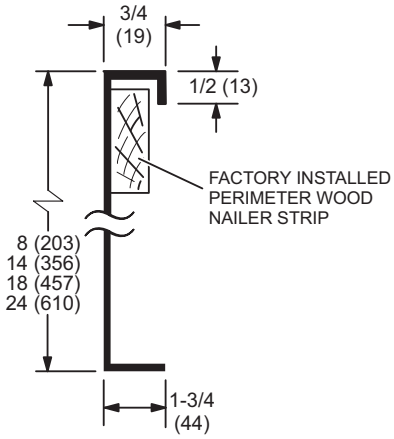

Usage	A		B		C		D		E	
	in.	mm	in.	mm	in.	mm	in.	mm	in.	mm
24, 30, 36	44-3/8	1127	16-7/8	429	13-7/8	352	17-1/4	438	1-1/4	32
42, 48, 60	52-7/8	1343	19-1/2	380	19-1/2	352	23-1/8	587	7	178

ADJUSTABLE PITCH ROOF WELDED CURB

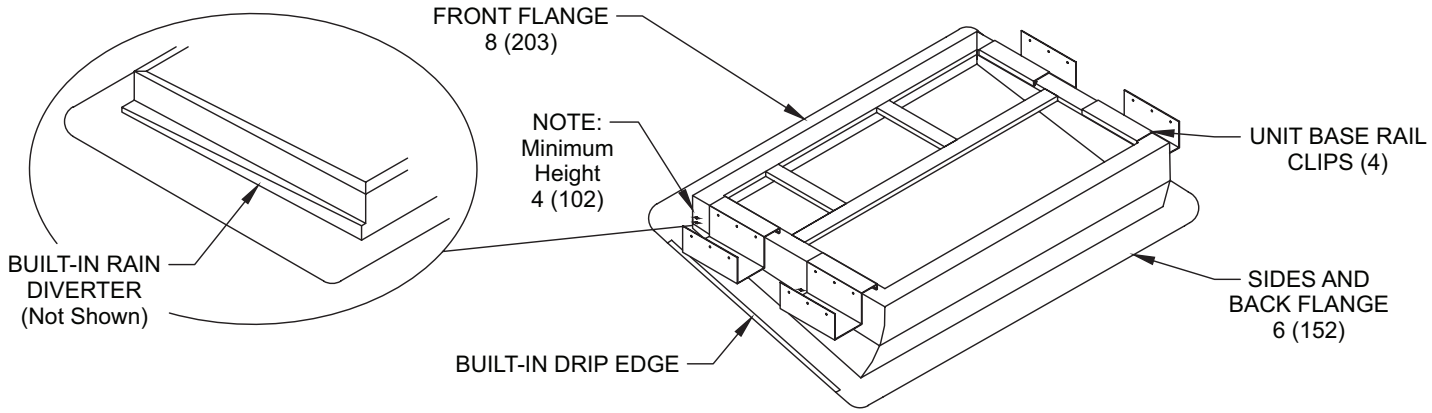

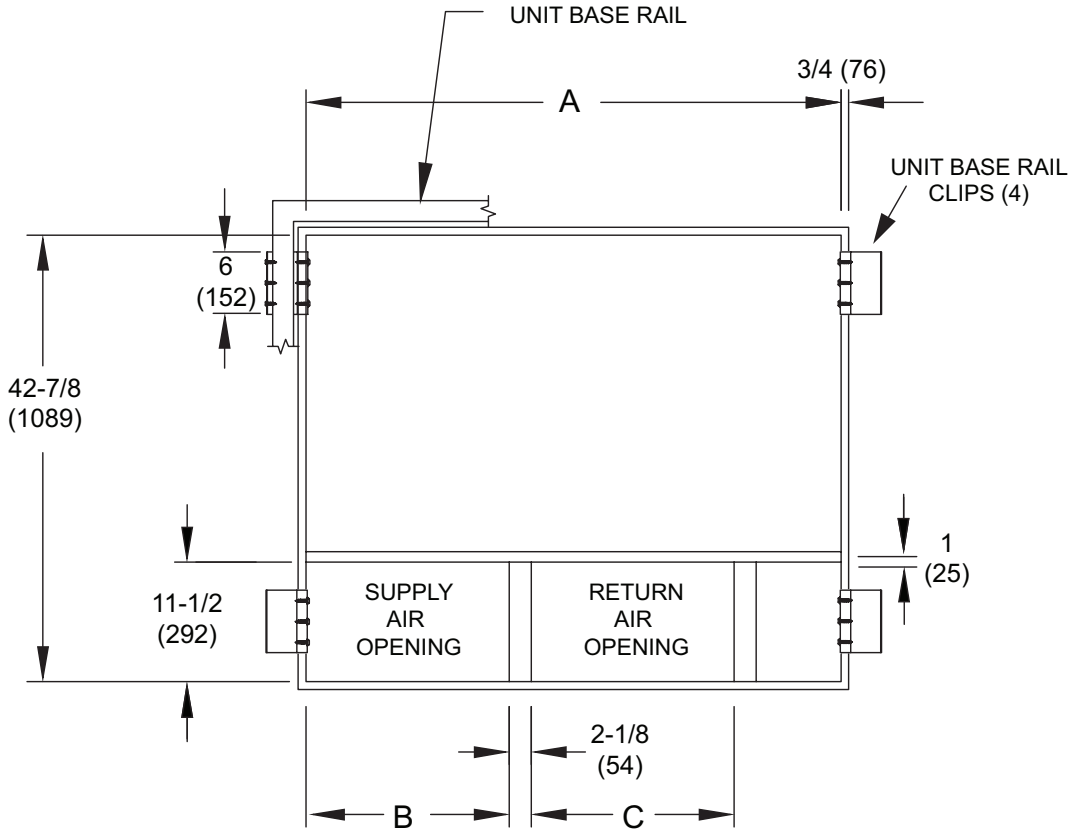

Usage	A		B		C	
	in.	mm	in.	mm	in.	mm
24, 30, 36	42-7/8	1089	13-7/8	352	16-7/8	429
42, 48, 60	51-3/8	1305	19-1/2	495	19-1/2	495

ADJUSTABLE PITCH ROOF CLIP CURB

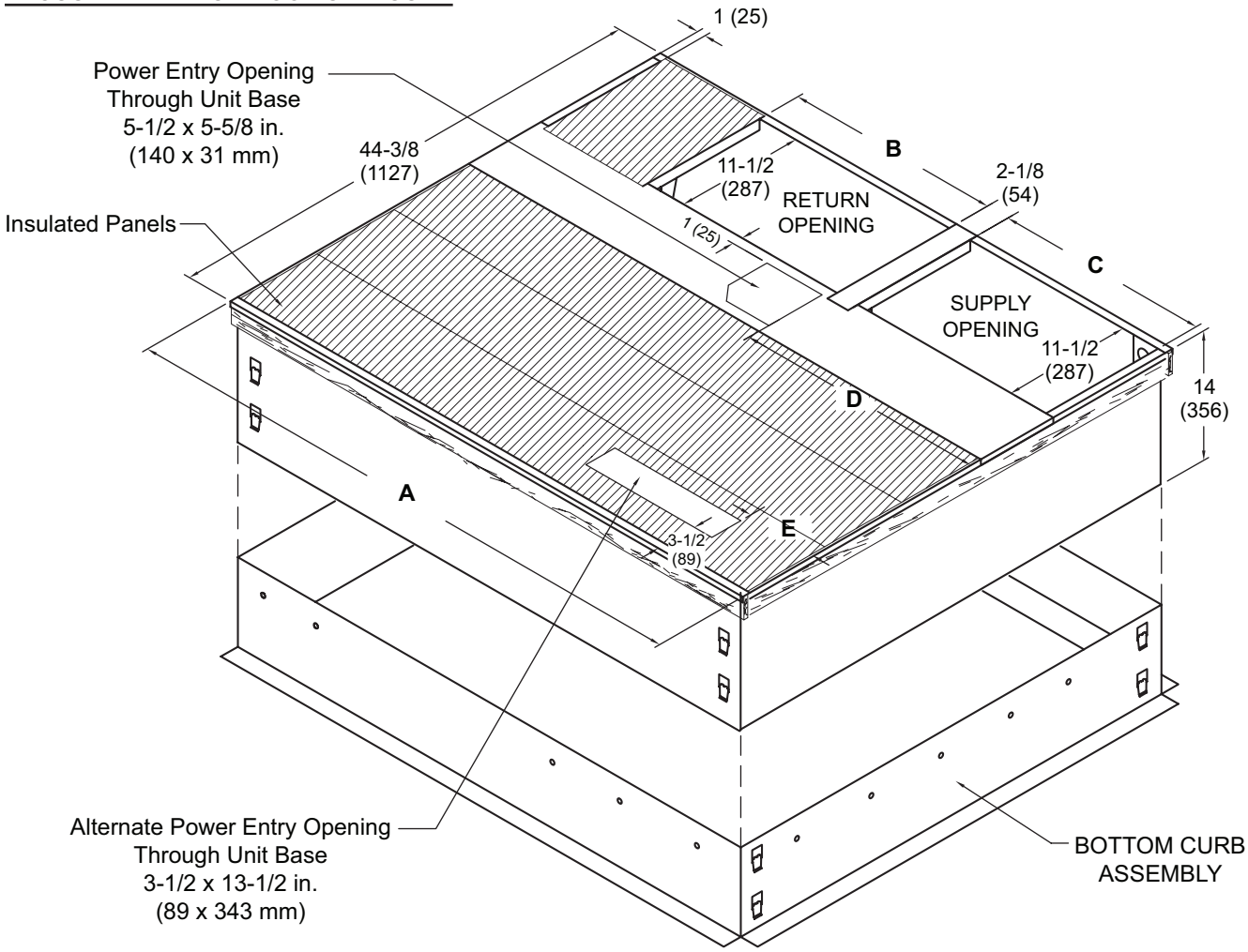

NOTE - Roof deck may be omitted within confines of curb.

TYPICAL FLASHING DETAIL FOR ROOF CURB

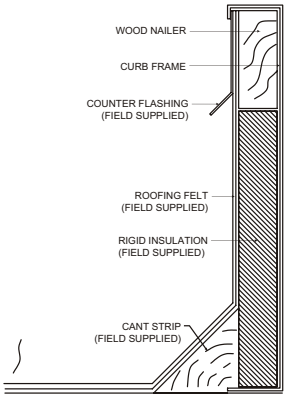

DETAIL ROOF CURB

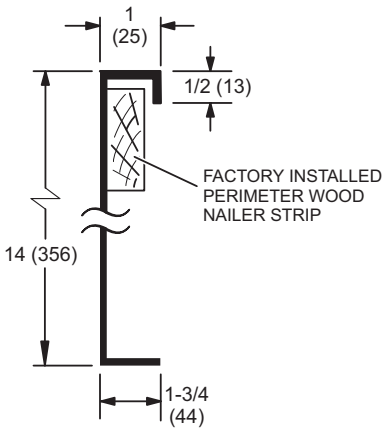

Usage	A		B		C		D		E	
	in.	mm	in.	mm	in.	mm	in.	mm	in.	mm
24, 30, 36	44-3/8	1127	16-7/8	429	13-7/8	352	17-1/4	438	1-1/4	32
42, 48, 60	52-7/8	1343	19-1/2	380	19-1/2	352	23-1/8	587	7	178

REVISIONS

Sections	Description of Change
Control Options	Updated to reflect latest product offering.
Dimensions	Updated dimension table.

Visit us at www.Lennox.com
For the latest technical information, www.LennoxPros.com
Contact us at 1-800-4-LENNOX

NOTE - Due to Lennox' ongoing commitment to quality, Specifications, Ratings and Dimensions subject to change without notice and without incurring liability.
Improper installation, adjustment, alteration, service or maintenance can cause property damage or personal injury.
Installation and service must be performed by a qualified installer and servicing agency.

©2026 Lennox Industries, Inc.