ML180UHE(K)

MERIT® SERIES

Upflow / Horizontal | Constant Torque Blower | Refrigerant Detection | 60Hz

RESIDENTIAL
PRODUCT SPECIFICATIONS (EHB)

AFUE - 80%
Input - 44,000 to 132,000 Btuh
Nominal Add-on Cooling - 1.5 to 5 Tons

MERIT® SERIES

MODEL NUMBER IDENTIFICATION

ML 1 80 UH 070 X E 36 B K

Unit Type
ML =Merit® Series

Stages
1 = Single-Stage

AFUE
80 = 80%

Configuration
UH = Upflow/Horizontal

Nominal Gas Heat Input
045 = 44,000 Btuh
070 = 66,000 Btuh
090 = 88,000 Btuh
110 = 110,000 Btuh
135 = 132,000 Btuh

Refrigerant Detection
K = Refrigerant Detection-Ready

[1] **Cabinet Width**
A = 14-1/2 in.
B = 17-1/2 in.
C = 21 in.
D = 24-1/2 in.

Nominal Add-On Cooling Capacity
36 = 1.5-3 tons
48 = 2.5-4 tons
60 = 3-5 tons

Blower
E = High Efficiency Constant Torque Blower Motor

Low NOx
X = Units meet California Nitrogen Oxides Standard (40 ng/J)

[1] Indoor coils with the same letter designation physically match the furnace.

Form Number 211182 | May 2025
Supersedes all previous versions

FEATURE HIGHLIGHTS

1. Lennox Duralok™ Heat Exchanger Assembly
2. Inshot Burners
3. SureLight® Hot Surface Ignitor
4. Gas Control Valve
5. Combustion Air Inducer
6. Flame Rollout Switches
7. Power Saver™ Constant Torque Blower
8. SureLight® Integrated Furnace Control
9. Insulated Cabinet
10. Safety Interlock Switch
11. Gas Piping And Electrical Inlets

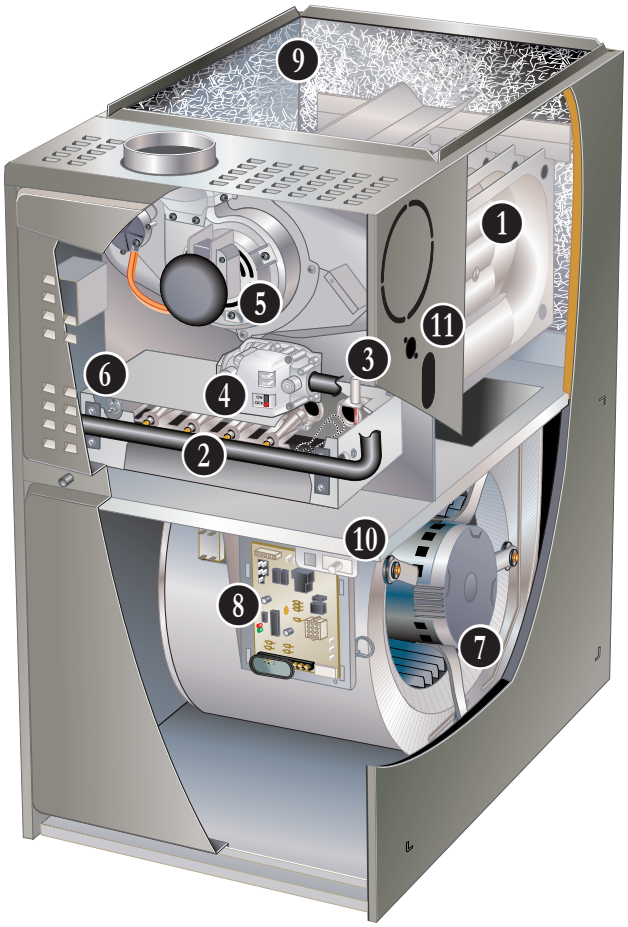

NOTE - ML180UHE FURNACES ARE NOT AVAILABLE IN CANADA!

CONTENTS

Approvals And Warranty . . . 3
Blower Data . . . 18
Dimensions - Furnace/Coil Combined Dimensions . . . 17
Dimensions - Optional Accessories . . . 16
Dimensions - Unit - Horizontal Position . . . 15
Dimensions - Unit - Upflow Position . . . 14
Features . . . 3
Gas Heat Accessories . . . 13
High Altitude Derate . . . 13
Indoor Air Quality Products . . . 8
Installation Clearances . . . 12
Optional Accessories - Order Separately . . . 12
Specifications . . . 11

APPROVALS AND WARRANTY

APPROVALS

- AHRI Certified
- Tested and rated according to US DOE test procedures and FTC labeling regulations
- ISO 9001 Registered Manufacturing Quality System
- Blower data from unit tests conducted in Lennox Laboratory air test chamber
- All models meet UL 60335-2-40 Refrigerant Detector Requirements

NOTE - This furnace has not been CSA International design certified for installation in mobile homes, recreational vehicles, or outdoors.

California Only

- These furnaces **do not meet** the South Coast Air Quality Management District (SCAQMD) Rule 1111 and San Joaquin Valley Air Pollution Control District (SJVAPCD) Rule 4905 NOx emission limit (14 ng/J) and cannot be installed within the SCAQMD, SJVAPCD and Bay Area
- All "X" model furnaces are approved by the California Energy Commission and meets California Nitrogen Oxides Standard (NOx) limits of 40 ng/J

WARRANTY

- Heat Exchanger:
  - Limited twenty years in residential applications
  - Limited ten years in non-residential applications
- All other covered components:
  - Limited five years in residential installations
  - Limited one year in non-residential installations

NOTE - Refer to Lennox® Basic Limited Warranty at www.Lennox.com for additional details.

FEATURES

APPLICATIONS

- Input capacities of 44,000, 66,000, 88,000, 110,000 and 132,000 Btuh
- Energy efficiency (AFUE) - 80%
- Compact cabinet
- Upflow, horizontal-left or horizontal-right applications
- Lennox add-on indoor coils, high-efficiency air cleaners and humidifiers can easily be added to furnace
- Shipped factory assembled with all controls installed and wired
- Ready for installation in upflow or horizontal right-hand position without any modifications

NOTE - Horizontal left-hand position requires repositioning of pressure switch.

- Removable bottom seal panel shipped in place for side return air is easily removed for bottom/end return air applications
- Each unit factory test operated to ensure proper operation

HEATING SYSTEM

1 Lennox Duralok™ Heat Exchanger Assembly
- Heavy gauge aluminized steel heat exchanger
- Crimped seam clamshell type design
- Designed for normal expansion and contraction
- Minimum resistance to air flow
- Laboratory life cycle tested in excess of industry standards
- Compact size permits low overall design of furnace cabinet

2 Inshot Burners
- Aluminized steel inshot burners provide efficient, trouble-free operation
- Burner venturi mixes air and gas in correct proportion for proper combustion
- Burner assembly is removable from the unit as a single component for ease of service

3 SureLight® Hot Surface Ignitor
- Tough, reliable, long-life, trouble-free performance
- Silicon nitride ignitor
- Cemented to steatite block for protection against current leakage
- Ignition leads are constructed of nickel plated copper and are enclosed in high temperature Teflon® insulation for dependable operation

HEATING SYSTEM (continued)

4 Gas Control Valve
- 24 volt redundant combination gas control valve combines manual shut off switch (On-Off), automatic electric valve (dual) and gas pressure regulation into a compact combination control

5 Combustion Air Inducer
- Shaded pole heavy duty blower prepurges heat exchanger and safely vents flue products
- Pressure switch proves blower operation before allowing gas valve to open
- Operates only during heating cycle
- Direct access allows inducer assembly to be rotated 90° clockwise or counterclockwise to facilitate easy vent attachment from either side of the cabinet in upflow applications and from the top in horizontal applications

6 Flame Rollout Switches (2)
- Factory installed on the front of the burner box
- Switches provides protection from abnormal operating conditions
- Manual reset

Limit Control
- Primary limit is accurately located on vestibule panel
- Automatic reset

Optional Accessories

High Altitude Pressure Switch Kit
- Required on most units for proper unit operation at altitudes from 4,501 to 7500 ft.

Natural Gas to LPG/Propane Conversion Kit
- Required for field changeover from natural gas to LPG/Propane

LPG/Propane to Natural Gas Conversion Kit
- Required for field changeover from LPG/Propane to natural gas

Vent Adaptor (Upflow Applications Only)
- Allows venting through a masonry chimney without the need of a flue liner
- Manual reset temperature sensor protects against abnormal operating conditions
- Sensor wiring may be routed from either side of adaptor
- Minimum winter design temperatures:
  - −10°F when used with interior masonry chimneys
  - +5°F when used with exterior masonry chimneys

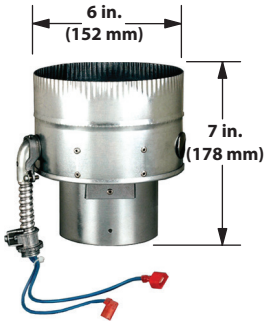

NOTE - Refer to Winter Design Temperatures Map on page 10 for application information. Also refer to the installation instructions for detailed information.

BLOWER

7 Power Saver™ Constant Torque Blower Motor
- Programmable high efficiency multi-speed blower motor. By maintaining constant torque output, blower motor can deliver more uniform (but not constant) airflow over the static pressure range
- Programmable multi-speed operation is achieved by the use of an ECM (Electronically Commutated Motor) motor
- Leadless blower motor features simple plug-in connections
- Controlled by the Integrated Furnace Control
- Blower speeds are easily changed on the integrated furnace control. See Blower Data tables

Blower Assembly
- Lennox designed and built, direct drive blower
- Each blower is statically and dynamically balanced as an assembly before installation in the unit
- Blower motor is resiliently mounted to blower assembly
- Blower is easily removed for servicing

FEATURES

CONTROLS

8 SureLight® Integrated Furnace Control

- Contains all necessary controls and relays to operate furnace
- Combustion air inducer is operated by the integrated furnace control. Prior to ignition, a pre-purge cycle for 15 seconds is initiated
- After the main burners are turned off, a post-purge cycle for 5 seconds is run
- Flame sensor assures safe and reliable operation
- Should loss of flame occur, the integrated furnace control will initiate 4 re-attempts at ignition before locking out unit operation for 60 minutes
- Watchguard type circuit automatically resets ignition controls after one hour of continuous thermostat demand after unit lockout, eliminating nuisance calls for service
- Display LED - Seven segment LED displays numeric information related to diagnostics as well as system operation and status
  - Diagnostic codes are held in non-volatile memory, immune from power interruptions
  - Holds up to ten diagnostic codes in order of occurrence for recall on demand
  - Port on blower door allows for easy viewing
- Fan control consists of adjustable blower timed-off delay (60, 90, 120, 180 seconds - factory setting 120 seconds) and fixed blower timed-on delay (30 seconds heating, 2 seconds cooling)
- For air-conditioning applications, blower is automatically energized on thermostat demand for cooling
- Two accessory terminals furnished for additional power supply requirements for 120 volt (less than 1 amp) power humidifiers and powered air cleaners
- One additional terminal is furnished for power supply requirements for 24V (less than 0.5 amp) low voltage accessories
- Ignition control has a single red LED to indicate status

Twinning

- Terminal furnished on furnace control for twinning two furnaces together

24 Volt Transformer (40VA)

- Furnished and factory installed on outside of control box
- Circuit breaker (furnished) is wired in series

Field Wiring Make-Up Box

- Furnished for line voltage wiring
- Factory installed internally on left side of furnace
- Box may be installed internally on right side of furnace

REFRIGERATION DETECTION SYSTEM (RDS)

(Part of the SureLight® Integrated Furnace Control)

- Complies with UL 60335-2-40 approved standard
- Required for all systems using R-454B refrigerant
- Plug-in connection to the RDS Coil Sensor
- Supports up to two RDS Coil Sensors (factory setting)
- Used as an interface between indoor unit and thermostat to control system
- Ensures safe operation for systems equipped with R-454B refrigerant
- If R-454B refrigerant is detected, the refrigerant detection system will stop compressor and/or heating operation and operate the blower to reduce concentrations in the conditioned space
- Once safe levels are reached the HVAC system will resume normal operation
- Low GWP test button for troubleshooting
- Alarm/Zone relay interface can trigger an external alarm if R-454B refrigerant is detected and open all zone dampers (if part of a zoning system) if R-454B refrigerant is detected
- Power is disabled to non-communicating thermostats to prevent demand if R-454B refrigerant is detected
- On system start-up blower will run for five minutes and any thermostat demands are disabled

Optional Accessories

M30 Smart Wi-Fi Thermostat

- Wi-Fi-enabled, electronic 7-day, universal, multi-stage, programmable, touchscreen thermostat
- 4 Heat/2 Cool
- Auto-changeover
- Dual-fuel control with optional outdoor sensor
- Controls dehumidification during cooling mode and humidification during heating mode

- Offers enhanced capabilities including humidification / dehumidification / dewpoint measurement and control, Humiditrol® control, and equipment maintenance reminders
- Easy to read 4.3 in. color touchscreen (measured diagonally)
- LCD display with backlight shows the current and set temperature, time, inside relative humidity, system status (operating mode and schedules) and outside temperature (optional outdoor sensor required)
- Smooth Setback Recovery starts system early to achieve setpoint at start of program period
- Compressor short-cycle protection (5 minutes)
- Up to four separate schedules are available plus Schedule IQ™
- One-Touch Away Mode - A quick and easy way to set the cooling and heating setpoints while away

CONTROLS (continued)

Optional Accessories (continued)

- Smart Away™ - Uses geo-fencing technology to determine when the homeowner is within a predetermined distance from the home to operate the system when leaving, away and arriving
- Wi-Fi remote monitoring and adjustment through a home wireless network for desktop PCs, laptops and apps for smartphones or tablets
- Smart home automation compatible with Amazon Alexa® and Google Assistant
- Service Dashboard features online real-time monitoring of installed Lennox® thermostats

NOTE - See the Lennox® M30 Smart Wi-Fi Thermostat Product Specifications bulletin in the Controls section for more information.

Remote Outdoor Temperature Sensor

- Used with the Lennox® M30 Smart Wi-Fi Thermostat
- Outdoor sensor allows thermostat to display outdoor temperature

NOTE - Sensor is required for the Enhanced Dehumidification Accessory (EDA).

Thermostat

- Thermostat is not furnished with unit
- Lennox Price Book for selection

Blower Relay Kit
(For Use With Two-Stage Outdoor Units)

- Allows furnace blower speed changes when matched with two-stage air conditioners or heat pumps

Transformer (75VA)

- Recommended when furnace is used with zoning or dual-fuel systems and other 24V accessories requiring a higher VA rating
- Circuit breaker (furnished) is wired in series
- Replaces the standard 40VA transformer

FILTER (Not Furnished)

- Filter and provisions for external mounting must be field provided

Optional Accessories

Air Filter and Rack Kit for Horizontal Return Air (End) Applications

- Washable or vacuum cleanable polyurethane frame type filter and external end return air rack
- Rack has filter door for servicing
- Flanges on rack for duct connection
- Field installed
- See dimension drawing

Air Filter and Rack Kit for Upflow Side Return Air
NOTE - Not for use with Return Air Base

- Washable or vacuum cleanable polyurethane frame type filter and external side return air rack available for field installation
- Available in single and ten pack kits
- Rack has filter door for servicing
- Flanges on rack for duct connection
- Field installs on either side of unit cabinet
- See dimension drawing

FEATURES

CABINET

- Low-profile, narrow width allows easy installation
- Heavy-gauge, cold rolled steel construction
- Pre-painted cabinet finish
- Flue outlet on top of cabinet for upflow applications, can be relocated to either side of cabinet for horizontal applications
- Flanges provided on supply air opening for ease of plenum connection or alignment with indoor coil
- 9 Insulated with foil faced insulation on sides and back of heating compartment
- Sealed blower compartment
- Inner blower compartment access panel seals blower compartment from air leakage
- Complete service access
- 10 Safety interlock switch automatically shuts off power to unit when blower compartment access panel is removed
- 11 Gas piping and electrical inlets are provided in both sides of cabinet

Low Leakage Cabinet

- All models have less than 2% air leakage
- Meets ANSI/ASHRAE Standard 193-2010 "Method of Test for Determining the Air Tightness of HVAC Equipment"

Bottom/Side Return Air Entry:

- Upflow/horizontal with bottom return air entry:
  - Remove furnished bottom seal panel from cabinet
- Upflow only with side return-air entry:
  - Corners are marked on either side of cabinet for return air cut-out
- See dimension drawings

NOTE - 60C and 60D size units that require air volumes over 1800 cfm must have one of the following:

- Single side return air and Optional Return Air Base with transition that must accommodate required 20 x 25 x 1 inch air filter to maintain proper velocity
- Bottom return air
- Return air from both sides
- Bottom and one side return air

- See Blower Performance Tables for additional information

Coil Match-Up

- All furnaces exactly match Lennox cased upflow indoor coils and horizontal indoor coils with same letter designation (A, B, C, D) in model number
- No adaptor required
- Engaging holes furnished on cabinet for alignment
- Lennox uncased coils match furnaces without any overhang but require an optional adaptor base or field fabricated transition to match furnace opening
- See coil bulletin for additional information

Optional Accessories

Horizontal Suspension Kit

- Provides suspension of unit and indoor coil in horizontal applications
- Allows complete service access
- Consists of corner mounted hanging brackets with vibration isolators, return air end support rail and hardware for assembly
- Metal hanging straps must be field provided

Return Air Base

NOTE - On furnaces with side return air and condensate trap on the same side of the cabinet, a field fabricated transition or Return Air Base is required when using an IAQ product higher than 14-3/16 inches installed next to the unit and serviced from the front. IAQ products higher than 20 inches require a field fabricated transition.

NOTE - Must be used for 60C and 60D size models with air volumes over 1800 cfm in upflow applications when only one side return is required.

- Cabinet is shipped flat for easy field assembly
- Pre-painted steel to match the furnace
- See Dimension Drawing

High Performance Economizer (Commercial Applications Only)

- Designed for applications requiring outdoor air to be utilized in a commercial HVAC system
- Allows the entry of fresh outdoor air for free cooling, reducing the requirement for mechanical cooling
- Heavy gauge galvanized steel cabinet lined with thick fiberglass insulation
- Mixed air sensor, outdoor air sensor and 24VAC transformer furnished
- Approved for California Title 24 building standards
- ASHRAE 90.1-2010 compliant
- See separate Product Specifications bulletin for additional information and available control and sensor options

INDOOR AIR QUALITY PRODUCTS

Healthy Climate® PureAir® Air Purification System

- Filtration - The Carbon Clean 16® (MERV 16) media filter captures more than 95% of particles 0.3 microns and larger and more than 90% of particles 0.01 microns and larger
- Highest airflow performance and lowest pressure drop when compared to a leading brand.
- Long life filters up to 1 year

Healthy Climate® Media Air Cleaner

- High performance in a narrow 7 in. cabinet
- Available with MERV 11, 13, or 16 rated filters
- Multi-position heavy gauge steel cabinet will support furnace/coil or air handler and associated duct work
- Tool-less entry
- Tool-less assembly for quick installation

Healthy Climate® Whole Home In Duct Air Purifiers

- Compact Duct Mounted Design
- Effective against odors and VOC's
- Certified Ozone free
- UVC lamp and carbon cells

Healthy Climate® Ultraviolet Germicidal Lights

- Compact duct mounted design
- Single or dual applications
- Certified ozone free
- Effective against odors to help keep the system clean
- Safety Interlocks
  (Additional UVC Compliance Kit for UL 60335-2-40 is available for A2L applications)
- Low power consumption
- Available for 24V or 110/230V
- Up to 1340 microwatts /cm² output (dual lamp model)

NOTE - Please refer to the individual Product Specifications for these products for full information.

NOTE - Please refer to the individual Product Specifications for these products for full information.

INDOOR AIR QUALITY PRODUCTS - ORDERING

NOTE - Refer to the individual Product Specifications documents for additional accessories and maintenance items.

Description	Dimensions	Order Number
Healthy Climate® PureAir® Air Purification System		
PCO3-14-16	21.125 x 8.75 x 23.75	**Y6601**
PCO3-16-16	17.5 x 8.75 x 26.5	**Y6598**
PCO3-20-16	21.125 x 8.75 x 26.5	**Y6595**
Healthy Climate® Media Air Cleaner		
HCC14-23 (Cabinet)	21.25 x 23 x 7	**X7930**
HCF14-16 (Filter) MERV 16	20 x 20 x 5	**X7935**
HCXF14-16 (Expandable Filter) MERV 16	20 x 20 x 5	**X8308**
HCF14-13 MERV 13	20 x 20 x 5	**19L14**
HCF14-11 (Filter) MERV 11	20 x 20 x 5	**X0585**
HCXF14-11 (Expandable Filter) MERV 11	20 x 20 x 5	**X8305**
HCC16-28 (Cabinet)	17.5 x 28.5 x 7	**Y2920**
HCC16-28 (Cabinet) 4-pack	17.5 x 28.5 x 7	**Y2921**
HCF16-16 (Filter) MERV 16	16 x 25 x 5	**X6672**
HCXF16-16 (Expandable Filter) MERV 16	16 x 25 x 5	**X8306**
HCF16-13 MERV 13	16 x 25 x 5	**19L16**
HCF16-11 (Filter) MERV 11	16 x 25 x 5	**X6670**
HCXF16-11 (Expandable Filter) MERV 11	16 x 25 x 5	**X8303**
HCC20-28 (Cabinet)	21 x 28.5 x 7	**X6661**
HCC20-28 (Cabinet) 4-pack	21 x 28.5 x 7	**X7751**
HCF20-16 (Filter) MERV 16	20 x 25 x 5	**X6675**
HCXF20-16 (Expandable Filter) MERV 16	20 x 25 x 5	**X8307**
HCF20-13 MERV 13	20 x 25 x 5	**19L17**
HCF20-11 (Filter) MERV 11	20 x 25 x 5	**X6673**
HCXF20-11 (Expandable Filter) MERV 11	20 x 25 x 5	**X8304**
Healthy Climate® Whole Home In Duct Air Purifiers		
HCWHAP1	8 x 7 x 16.5	**23V99**
Healthy Climate® Ultraviolet Germicidal Lights		
UVC-24V (24V) 17.5 in.	Ballast 4.75 x 2.25 x 2	**X9423**
UVC-41W-S (110/230V) 17.5 in.	Ballast 11.75 x 2.75 x 1.625	**X9424**
UVC-41W-D (110/230V) 17.5 in.	Ballast 11.75 x 2.75 x 1.625	**X9425**

99% WINTER DESIGN TEMPERATURES FOR THE CONTIGUOUS UNITED STATES

This map is a necessarily generalized guide to temperatures in the contiguous Unites States. Temperatures shown for areas such as mountainous regions and large urban centers may not be accurate. The data used to develop this map was taken from the 1993 ASHRAE Fundamentals Handbook (Chapter 24, Table 1: Climate Conditions for the United States).

Reprinted with permission from NFPA 54: National Fuel Gas Code 1999, National Fire Protection Association, Quincy, MA 02269. This reprinted material is not the complete and official position of the National Fire Protection Association on the referenced subject, which is represented only by the standard in its entirety.

SPECIFICATIONS

Gas Heating Performance	**Model**	**ML180UH 045E36AK**	**ML180UH 070E36AK**	**ML180UH 070E36BK**	**ML180UH 090E48BK**
	Model - Low Nox	**ML180UH 045XE36AK**	**ML180UH 070XE36AK**	**ML180UH 070XE36BK**	**ML180UH 090XE48BK**
	[1] AFUE	80%	80%	80%	80%
	Input - Btuh	44,000	66,000	66,000	88,000
	Output - Btuh	36,000	53,000	53,000	72,000
	Temperature rise range - °F	15 - 45	40 - 70	40 - 70	35 - 65
	Gas Manifold Pressure (in. w.g.) Nat. Gas / LPG/Propane	3.5 / 10.0	3.5 / 10.0	3.5 / 10.0	3.5 / 10.0
High Static - in. w.g.		0.50	0.50	0.50	0.50
Connections	Flue connection - in. round	4	4	4	4
	Gas pipe size IPS	1/2	1/2	1/2	1/2
Indoor Blower	Wheel diameter x width - in.	10 x 8	10 x 10	10 x 10	10 x 10
	Motor Type	DC Brushless	DC Brushless	DC Brushless	DC Brushless
	Motor output - hp	1/2	1/2	1/2	3/4
	Tons of add-on cooling	1.5 - 3	1.5 - 3	1.5 - 3	2.5 - 4
	Air Volume Range - cfm	350 - 1380	625 - 1435	395 - 1415	750 - 1785
Electrical Data	Voltage	120 volts - 60 hertz - 1 phase			
	Blower motor full load amps	6.8	6.8	6.8	8.4
	Maximum overcurrent protection	15	15	15	15
Shipping Data	lbs. - 1 package	111	111	127	142

NOTE - Filters and provisions for mounting are not furnished and must be field provided.

[1] Annual Fuel Utilization Efficiency based on DOE test procedures and according to FTC labeling regulations. Isolated combustion system rating for non-weatherized furnaces.

SPECIFICATIONS

Gas Heating Performance	**Model**	**ML180UH090E60CK**	**ML180UH110E60CK**	**ML180UH135E60DK**
	Model - Low Nox	**- - -**	**ML180UH110XE60CK**	**- - -**
	[1] AFUE	80%	80%	80%
	Input - Btuh	88,000	110,000	132,000
	Output - Btuh	72,000	90,000	107,000
	Temperature rise range - °F	30 - 60	35 - 65	30 - 60
	Gas Manifold Pressure (in. w.g.) Nat. Gas / LPG/Propane	3.5 / 10.0	3.5 / 10.0	3.5 / 10.0
High Static - in. w.g.		0.50	0.50	0.50
Connections	Flue connection - in. round	4	4	4
	Gas pipe size IPS	1/2	1/2	1/2
Indoor Blower	Wheel diameter x width - in.	11-1/2 x 10	11-1/2 x 10	11 x 11
	Motor Type	DC Brushless	DC Brushless	DC Brushless
	Motor output - hp	1	1	1
	Tons of add-on cooling	3 - 5	3 - 5	3.5 - 5
	Air Volume Range - cfm	990 - 2290	920 - 2315	1140 - 2495
Electrical Data	Voltage	120 volts - 60 hertz - 1 phase		
	Blower motor full load amps	10.9	10.9	10.9
	Maximum overcurrent protection	15	15	15
Shipping Data	lbs. - 1 package	152	160	178

NOTE - Filters and provisions for mounting are not furnished and must be field provided.

[1] Annual Fuel Utilization Efficiency based on DOE test procedures and according to FTC labeling regulations. Isolated combustion system rating for non-weatherized furnaces.

INSTALLATION CLEARANCES

UPFLOW POSITION

Vent Type	Type B1	Type C
Sides	0 (0)	[1] 0 (0)
Rear	0 (0)	0 (0)
Top	1 (25)	1 (25)
Front	2-1/4 (57)	2-1/4 (57)
Front (service/alcove)	24 (610)	24 (610)
Floor	Combustible	Combustible
Flue	1 (25)	6 (152)

NOTE − Air for combustion must conform to the methods outlined in the National Fuel Gas Code (NFPA 54/ANSI-Z223.1).

NOTE − In the U.S. flue sizing must conform to the methods outlined in the current National Fuel Gas Code (NFPA 54/ANSI-Z223.1) or applicable provisions of local building codes.

[1] Left side requires 4 in. if single wall vent is used on 14-1/2 in. cabinets, 2 in. on 17-1/2 in. cabinets.

HORIZONTAL POSITION

Vent Type	Type B1	Type C
End	[1] 2 (51)	[1] 2 (51)
Rear	0 (0)	0 (0)
Top	[1] 0 (0)	[1] 0 (0)
Front	2-1/4 (57)	2-1/4 (57)
Front (service)	24 (610)	24 (610)
Floor	Combustible	Combustible
Flue	1 (25)	6 (152)

NOTE − Air for combustion must conform to the methods outlined in the National Fuel Gas Code (NFPA 54/ANSI-Z223.1).

NOTE − In the U.S. flue sizing must conform to the methods outlined in the current National Fuel Gas Code (NFPA 54/ANSI-Z223.1) or applicable provisions of local building codes.

[1] Line contact installation permissible between jacket top or sides and building joists.

OPTIONAL ACCESSORIES - ORDER SEPARATELY

			"A" Width Models	"B" Width Models	"C" Width Models	"D" Width Models
CABINET ACCESSORIES						
Horizontal Suspension Kit - Horizontal only			**51W10**	**51W10**	**51W10**	**51W10**
Return Air Base - Upflow only			**65W75**	**50W98**	**50W99**	**51W00**
High Performance Economizer (Commercial Only)			**10U53**	**10U53**	**10U53**	**10U53**
CONTROLS						
M30 Smart Wi-Fi Thermostat			**15Z69**	**15Z69**	**15Z69**	**15Z69**
Remote Outdoor Air Temperature Sensor			**X2658**	**X2658**	**X2658**	**X2658**
Blower Relay Kit (for two-stage outdoor units)			**85W66**	**85W66**	**85W66**	**85W66**
Transformer (75VA)			**27J32**	**27J32**	**27J32**	**27J32**
FILTERS						
[1] **Air Filter and Rack Kit**	Horizontal (end)		**87L95**	**87L96**	**87L97**	**87L98**
		Size of filter - in.	14 x 25 x 1	18 x 25 x 1	20 x 25 x 1	25 x 25 x 1
	Side Return	Single	**44J22**	**44J22**	**44J22**	**44J22**
		Ten Pack	**66K63**	**66K63**	**66K63**	**66K63**
		Size of filter - in.	16 x 25 x 1	16 x 25 x 1	16 x 25 x 1	16 x 25 x 1
VENTING						
Vent Adaptor − 6 in. conn. size upflow applications only			**18M79**	**18M79**	**18M79**	**18M79**

[1] Cleanable polyurethane, frame-type filter.

GAS HEAT ACCESSORIES

Input	High Altitude Pressure Switch Kit			Natural Gas to LPG/Propane Kit		LPG/Propane to Natural Gas Kit	Natural Gas High Altitude Orifice Kit
	0 - 4500 ft.	4501 - 7500 ft.	7501 - 10,000 ft.	0 - 7500 ft.	7501 - 10,000 ft.	0 - 7500 ft.	7501 - 10,000 ft.
045	No Change	80W52	80W51	11K49	11K44	73W81	73W37
070	No Change	80W52	80W51	11K49	11K44	73W81	73W37
090	No Change	80W52	80W51	11K49	11K44	73W81	73W37
110	No Change	80W52	80W52	11K49	11K44	73W81	73W37
135	No Change	80W52	80W51	11K49	11K44	73W81	73W37

HIGH ALTITUDE DERATE

NOTE - Units may be installed at altitudes up to 2000 ft. above sea level without any modifications.
At altitudes above 2000 ft. units must be derated to match information in the shaded areas shown below.

NOTE - This is the only permissible derate for these units.

Input	Gas Manifold Pressure (Outlet) in. w.g.								Line Pressure - in. w.g.		
	0 - 2000 Feet		2001 - 4500 Feet		4501 - 7500 Feet		7501 - 10,000 ft.		Minimum		Maximum
	Natural Gas	LPG/ Propane	Natural Gas	LPG/ Propane	Natural Gas	LPG/ Propane	[1] Natural Gas	LPG/ Propane	Natural Gas	LPG/ Propane	
045	3.5	10	3.2	10	3	10	3.5	10	4.5	11	13
070	3.5	10	3.2	10	2.8	10	3.5	10	4.5	11	13
090	3.5	10	3.2	10	2.7	9.6	3.5	10	4.5	11	13
110	3.5	10	3.5	10	3	9.6	3.5	10	4.5	11	13
135	3.5	10	3.5	10	2.9	9.6	3.5	10	4.5	11	13

[1] Natural Gas High Altitude Orifice Kit required.

DIMENSIONS - UNIT - UPFLOW POSITION

[1] NOTE - 60C and 60D size units that require air volumes over 1800 cfm must have one of the following:
1. Single side return air and Optional Return Air Base with transition that must accommodate required 20 x 25 x 1 inch (508 x 635 x 25 mm) air filter to maintain proper velocity.
2. Bottom return air.
3. Return air from both sides.
4. Bottom and one side return air.

See Blower Performance Tables for additional information.

[2] Flue outlet may be horizontal but furnace must be vented vertically

[3] Optional External Side Return Air Filter Kit is not for use with the optional Return Air Base.

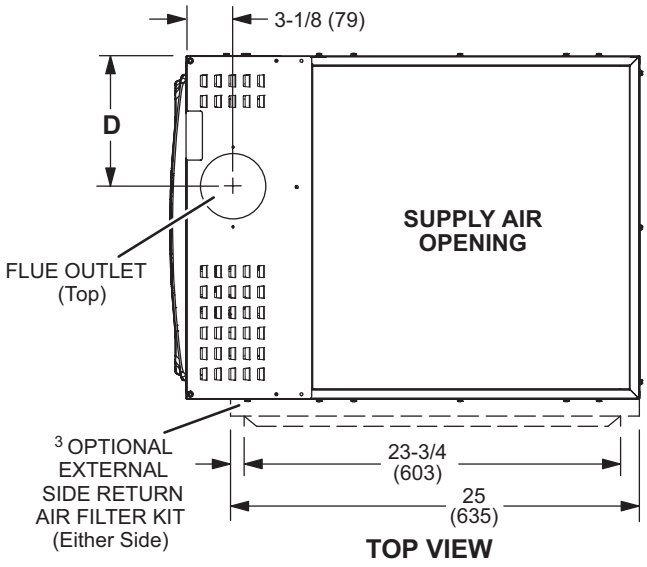

TOP VIEW

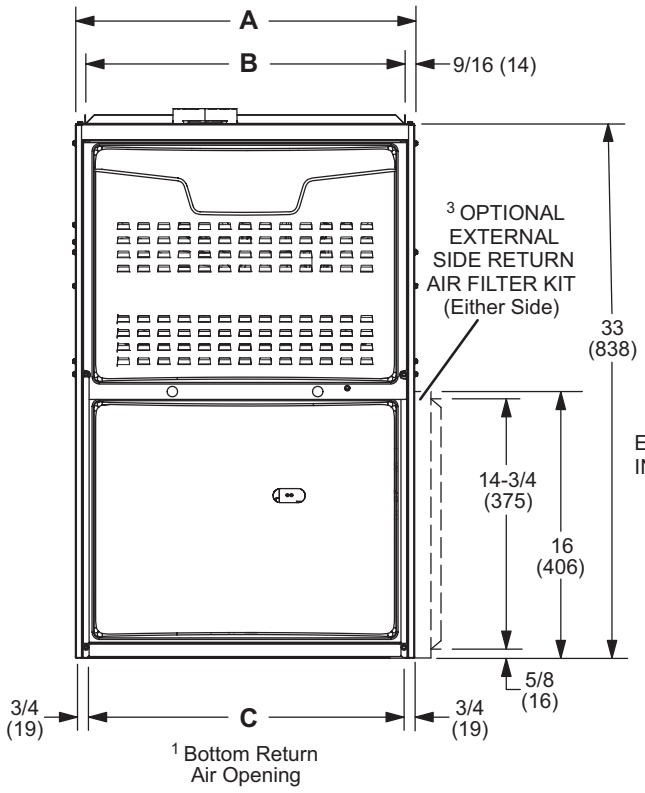

FRONT VIEW

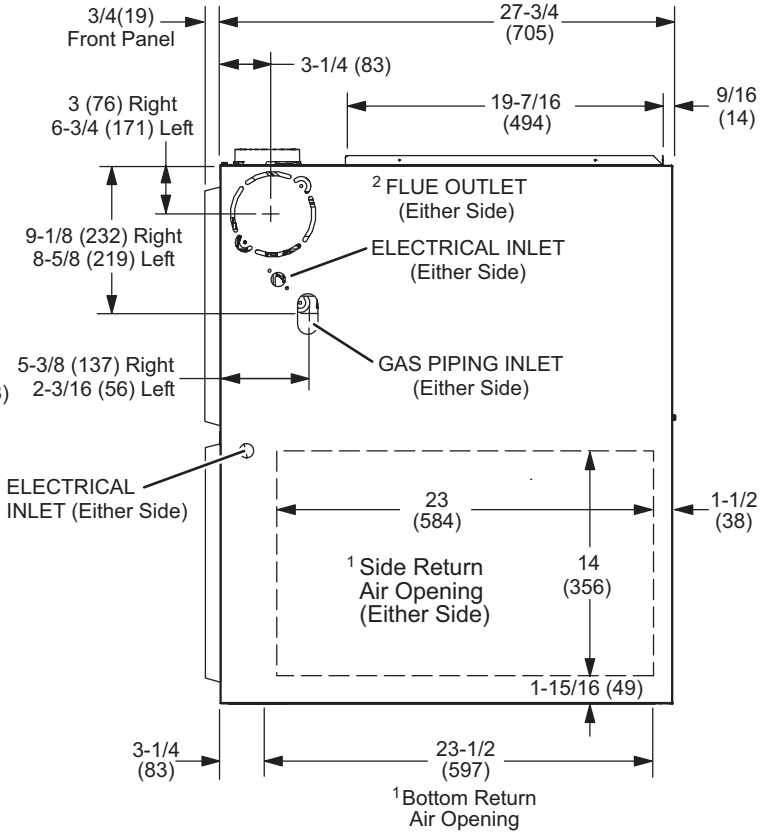

SIDE VIEW

Model No.	A		B		C		D	
	in.	mm	in.	mm	in.	mm	in.	mm
ML180UH045E36AK ML180UH070E36AK	14-1/2	368	13-3/8	340	13	330	4-3/4	121
ML180UH070E36BK ML180UH090E48BK	17-1/2	446	16-3/8	416	16	406	6-1/4	159
ML180UH090E60CK ML180UH110E60CK	21	533	19-7/8	504	19-1/2	495	8	203
ML180UH135E60DK	24-1/2	622	23-3/8	594	23	584	9-3/4	248

DIMENSIONS - UNIT - HORIZONTAL POSITION

LEFT-HAND AIR DISCHARGE

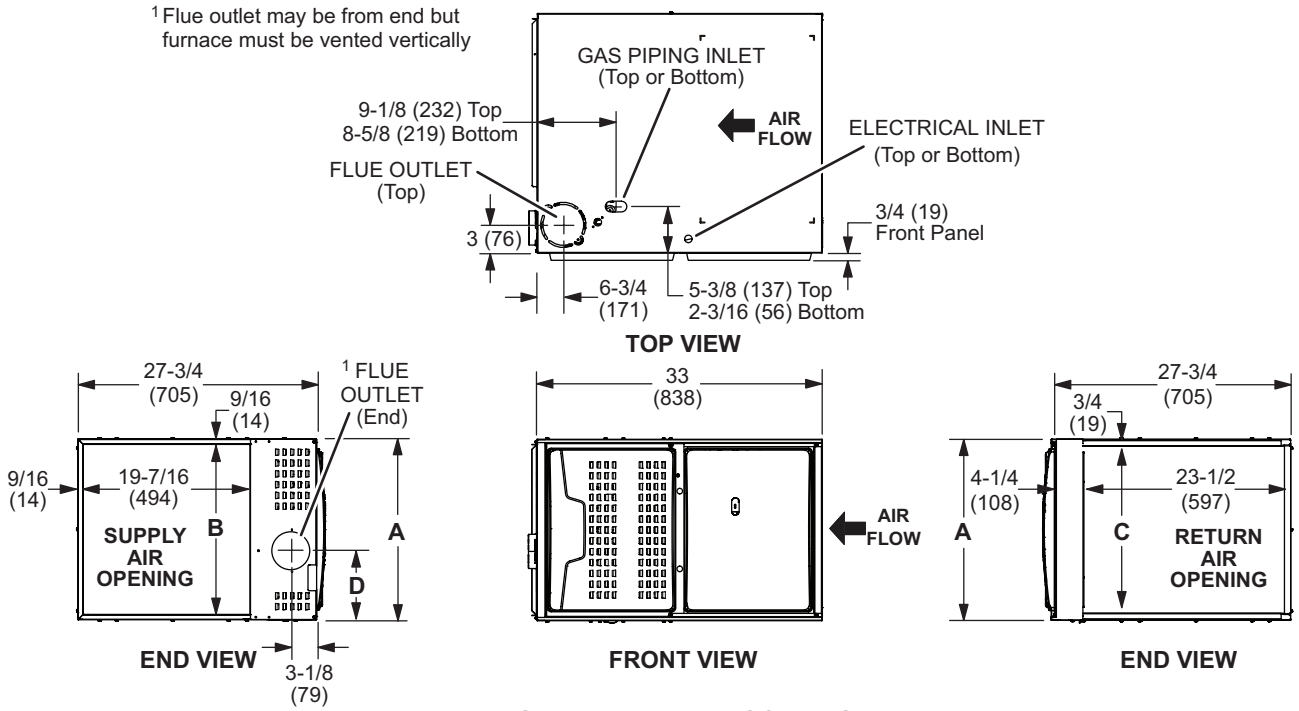

RIGHT-HAND AIR DISCHARGE

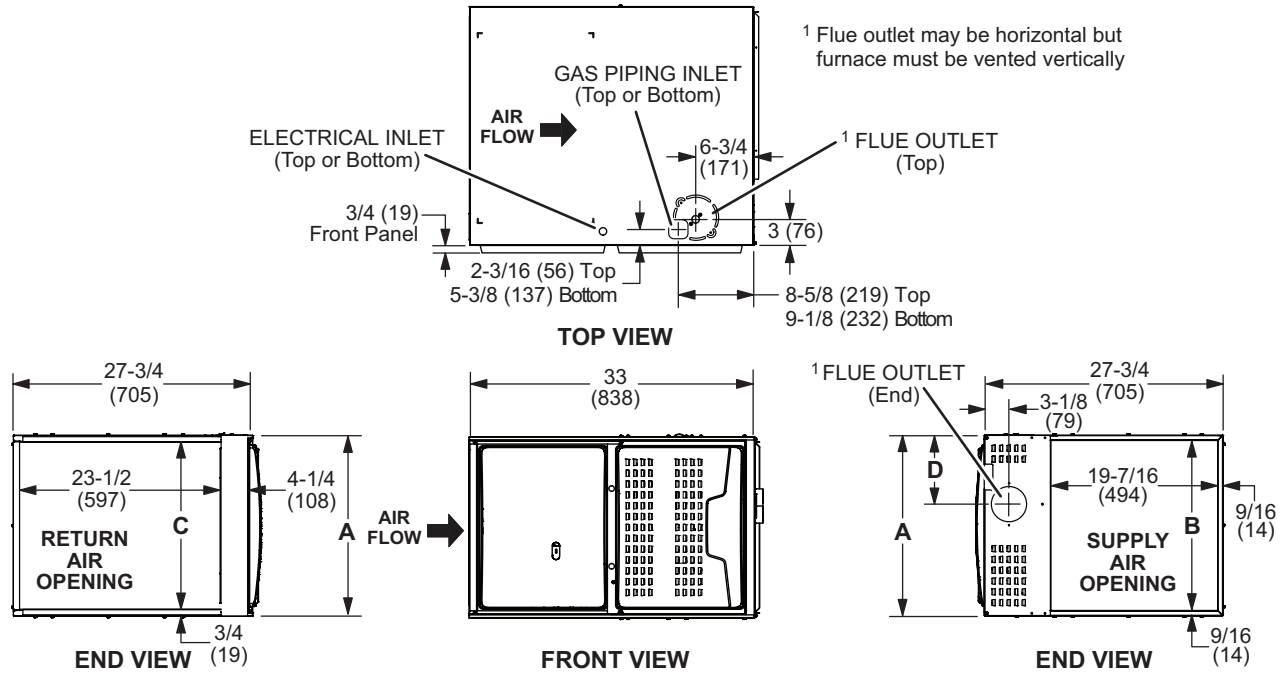

Model No.	A		B		C		D	
	in.	mm	in.	mm	in.	mm	in.	mm
ML180UH045E36AK ML180UH070E36AK	14-1/2	368	13-3/8	340	13	330	4-3/4	121
ML180UH070E36BK ML180UH090E48BK	17-1/2	446	16-3/8	416	16	406	6-1/4	159
ML180UH090E60CK ML180UH110E60CK	21	533	19-7/8	504	19-1/2	495	8	203
ML180UH135E60DK	24-1/2	622	23-3/8	594	23	584	9-3/4	248

HORIZONTAL (END) FILTER KIT

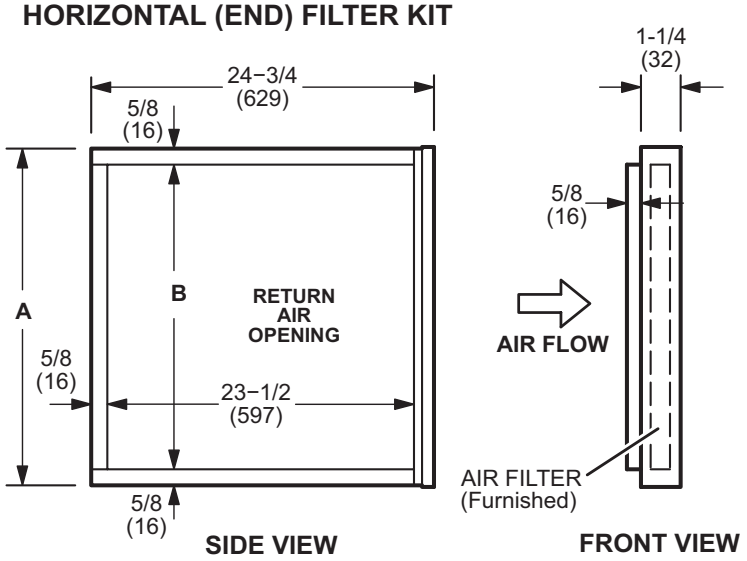

Furnace Cabinet Width	Catalog Number	A		B	
		in.	mm	in.	mm
A	**87L95**	14	356	12-3/4	324
B	**87L96**	18	457	16-3/4	425
C	**87L97**	21	533	18-3/4	476
D	**87L98**	25	635	23-3/4	603

Optional Return Air Base
(Upflow Applications Only - For use with A, B, C and D cabinets)

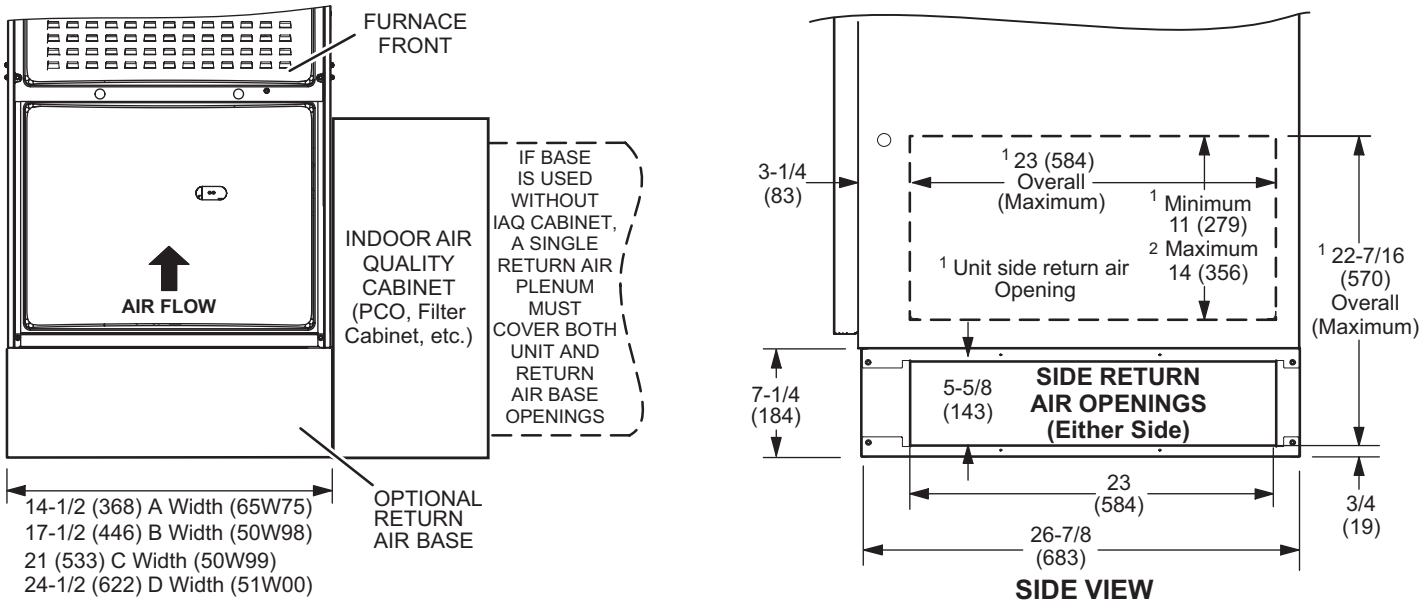

NOTE- Optional Side Return Air Filter Kits are not for use with Optional Return Air Base.

[1] Both the unit return air opening and the base return air opening must be covered by a single plenum or IAQ cabinet. Minimum unit side return air opening dimensions for units requiring 1800 cfm or more of air (W x H): 23 x 11 in. (584 x 279 mm). The opening can be cut as needed to accommodate plenum or IAQ cabinet while maintaining dimensions shown. Side return air openings must be cut in the field. There are cutting guides stenciled on the cabinet for the side return air opening. The size of the opening must not extend beyond the markings on the furnace cabinet.

[2] To minimize pressure drop, the largest opening height possible, up to 14 in. (356 mm), is preferred.

DIMENSIONS - FURNACE/COIL COMBINED DIMENSIONS

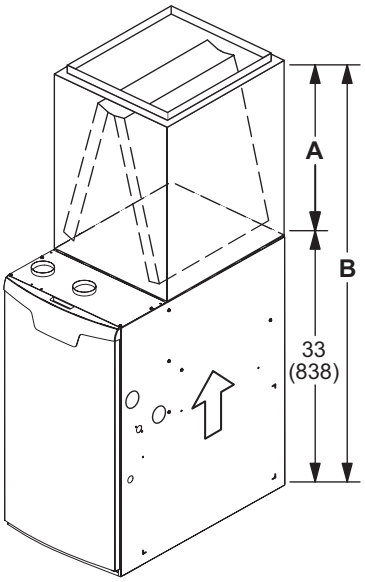

UPFLOW POSITION - CASED

Model		A		B	
CK40CT	**C35/CX35**	**in.**	**mm**	**in.**	**mm**
CK40CT-18/24A CK40CT-18/24B	C35/CX35-18/24A C35/CX35-18/24B	16-1/2	419	49-1/2	1257
CK40CT-24A CK40CT-24B	C35/CX35-24A C35/CX35-24B	18-1/2	470	51-1/2	1308
CK40CT-30A CK40CT-30B	C35/CX35-30A C35/CX35-30B	22-1/2	572	55-1/2	1410
CK40CT-30/36A CK40CT-30/36B CK40CT-30/36C	C35/CX35-30/36A C35/CX35-30/36B C35/CX35-30/36C	24-1/2	622	57-1/2	1461
CK40CT-36A CK40CT-36B	C35/CX35-36A C35/CX35-36B	24-1/2	622	57-1/2	1461
CK40CT-48B CK40CT-48C	C35/CX35-48B C35/CX35-48C	27-1/2	699	60-1/2	1537
CK40CT-49C	C35/CX35-49C	29-1/2	749	62-1/2	1588
CK40CT-50/60C	C35/CX35-50/60C	27-1/2	699	60-1/2	1537
CK40CT-60C	CX35-60C	31-1/2	800	64-1/2	1638
CK40CT-60D	CX35-60D	29-1/2	749	62-1/2	1588

UPFLOW POSITION - UNCASED

Model		A		B	
CK40UT	**C35**	**in.**	**mm**	**in.**	**mm**
CK40UT-18/24A CK40UT-18/24B	C35-18/24A C35-18/24B	14-1/8	359	47-1/8	1197
CK40UT-24A CK40UT-24B	C35-24A C35-24B	16-3/8	416	49-3/8	1254
CK40UT-30A CK40UT-30B	C35-30A C35-30B	20-3/4	527	53-3/4	1365
CK40UT-30/36A CK40UT-30/36B CK40UT-30/36C	C35-30/36A C35-30/36B C35-30/36C	22-1/4	565	55-1/4	1403
CK40UT-36A CK40UT-36B	C35-36A C35-36B	22-3/8	568	55-3/8	1407
CK40UT-48B CK40UT-48C	C35-48B C35-48C	26-1/4	667	59-1/4	1505
CK40UT-49C	C35-49C	28-1/2	724	61-1/2	1562
CK40UT-50/60C	C35-50/60C	25-7/8	657	58-7/8	1495
CK40UT-60C	C35-60C	30-5/8	778	63-5/8	1616
CK40UT-60D	C35-60D	28	711	61	1549

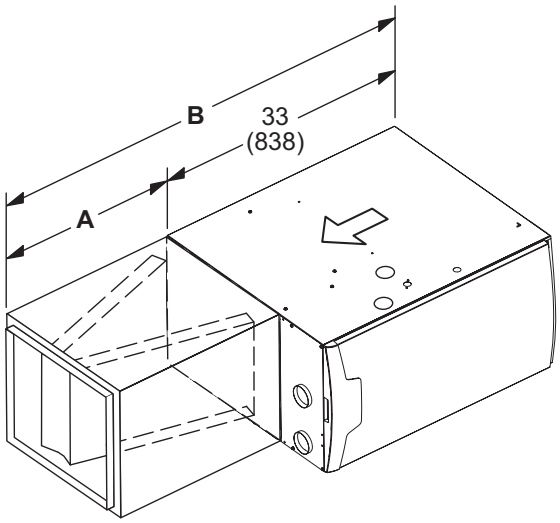

HORIZONTAL POSITION

Model		A		B	
CK40HT	**CHX35**	**in.**	**mm**	**in.**	**mm**
CK40HT-18A CK40HT-24A CK40HT-24B CK40HT-30B CK40HT-36A CK40HT-36B CK40HT-36C CK40HT-42C CK40HT-48C	CHX35-18A CHX35-24A CHX35-24B CHX35-30B CHX35-36A CHX35-36B CHX35-36C CHX35-42C CHX35-48C	26-1/2	673	59-1/2	1511
CK40CT-30A CK40CT-42B CK40CT-48B CK40CT-51/61C CK40CT-60D	CHX35-30A CHX35-42B CHX35-48B CHX35-51/61C CHX35-60D	31-1/2	880	64-1/2	1638

BLOWER DATA

ML180UH045E36AK PERFORMANCE (Less Filter)

External Static Pressure in. w.g.	Air Volume / Watts at Various Blower Speeds									
	High (Black)		Medium-High (Brown)		Medium (Blue)		Medium-Low (Yellow)		Low (Red)	
	cfm	Watts	cfm	Watts	cfm	Watts	cfm	Watts	cfm	Watts
0.10	1383	239	1179	156	991	106	970	102	959	98
0.20	1346	251	1132	165	943	114	854	92	764	78
0.30	1308	263	1083	174	896	122	797	99	668	78
0.40	1268	272	1057	185	864	130	748	106	612	85
0.50	1257	286	1013	193	818	139	697	114	562	92
0.60	1211	297	985	203	775	147	651	121	508	98
0.70	1185	307	937	212	728	155	605	129	456	104
0.80	1140	318	902	221	688	163	554	136	385	111
0.90	1115	328	866	231	641	171	512	143	- - -	- - -
1.00	1074	335	823	241	598	178	446	151	- - -	- - -

ML180UH070E36AK PERFORMANCE (Less Filter)

External Static Pressure in. w.g.	Air Volume / Watts at Various Blower Speeds									
	High (Black)		Medium-High (Brown)		Medium (Blue)		Medium-Low (Yellow)		Low (Red)	
	cfm	Watts	cfm	Watts	cfm	Watts	cfm	Watts	cfm	Watts
0.10	1372	296	1160	188	1073	154	1040	144	880	96
0.20	1340	305	1125	197	1035	162	1002	151	836	103
0.30	1309	315	1092	205	999	170	965	159	794	110
0.40	1281	325	1059	213	964	178	929	166	752	116
0.50	1253	335	1026	221	927	185	891	173	709	122
0.60	1225	344	992	229	891	192	855	180	666	128
0.70	1196	353	958	237	854	199	818	187	622	134
0.80	1158	357	924	245	817	206	780	194	582	139
0.90	1122	363	890	252	781	213	742	200	544	144
1.00	1090	370	849	257	746	219	707	207	504	149

ML180UH070E36BK PERFORMANCE (Less Filter)

External Static Pressure in. w.g.	Air Volume / Watts at Various Blower Speeds									
	High (Black)		Medium-High (Brown)		Medium (Blue)		Medium-Low (Yellow)		Low (Red)	
	cfm	Watts	cfm	Watts	cfm	Watts	cfm	Watts	cfm	Watts
0.10	1493	267	1256	173	1166	145	1139	132	978	96
0.20	1433	277	1221	184	1116	155	1078	139	903	98
0.30	1395	288	1151	193	1067	163	1027	148	849	107
0.40	1353	296	1094	199	1008	171	975	155	786	113
0.50	1312	308	1047	209	951	179	923	164	726	120
0.60	1270	318	995	219	901	187	875	172	667	127
0.70	1232	328	943	228	856	194	824	181	604	134
0.80	1187	338	895	236	804	202	774	188	543	142
0.90	1144	348	858	244	754	209	720	196	492	147
1.00	1067	339	809	252	703	217	669	204	447	152

BLOWER DATA

ML180UH090E48BK PERFORMANCE (Less Filter)

External Static Pressure in. w.g.	Air Volume / Watts at Various Blower Speeds									
	High (Black)		Medium-High (Brown)		Medium (Blue)		Medium-Low (Yellow)		Low (Red)	
	cfm	Watts	cfm	Watts	cfm	Watts	cfm	Watts	cfm	Watts
0.10	1740	329	1528	233	1404	193	1348	173	1205	130
0.20	1697	344	1479	245	1360	203	1302	185	1147	140
0.30	1655	355	1437	260	1329	219	1262	194	1097	151
0.40	1624	373	1405	274	1268	225	1215	204	1043	161
0.50	1581	382	1376	287	1234	238	1175	216	996	171
0.60	1545	400	1319	299	1197	249	1119	227	944	182
0.70	1513	414	1277	308	1150	260	1069	238	889	190
0.80	1472	426	1246	321	1097	270	1025	251	845	199
0.90	1421	431	1197	333	1051	283	983	261	781	211
1.00	1296	404	1153	344	1010	292	935	270	723	221

ML180UH090E60CK PERFORMANCE (Less Filter)

External Static Pressure in. w.g.	Air Volume / Watts at Different Blower Speeds																			
	Bottom Return Air, Side Return Air from Both Sides or Return Air from Bottom and One Side.										**Single Side Return Air** − Air volumes in **bold** (over 1800 cfm) require Optional Return Air Base and field fabricated transition to accommodate 20 x 25 x 1 in. air filter in order to maintain proper air velocity.									
	High (Black)		Medium-High (Brown)		Medium (Blue)		Medium-Low (Yellow)		Low (Red)		High (Black)		Medium-High (Brown)		Medium (Blue)		Medium-Low (Yellow)		Low (Red)	
	cfm	Watts	cfm	Watts	cfm	Watts	cfm	Watts	cfm	Watts	cfm	Watts	cfm	Watts	cfm	Watts	cfm	Watts	cfm	Watts
0.10	2179	623	1917	435	1725	326	1565	256	1422	201	**2148**	**593**	**1889**	**403**	1707	305	1553	234	1404	185
0.20	2141	640	1874	450	1679	340	1515	268	1370	214	**2123**	**606**	**1823**	**406**	1679	317	1503	244	1377	196
0.30	2102	658	1831	464	1636	355	1468	282	1321	225	**2069**	**613**	**1814**	**422**	1638	327	1464	255	1328	207
0.40	2065	675	1790	480	1591	368	1420	294	1265	237	**2065**	**634**	1791	435	1593	337	1414	264	1268	216
0.50	2029	693	1749	495	1546	381	1371	306	1208	248	**2030**	**645**	1734	445	1548	348	1366	276	1224	228
0.60	1991	709	1708	510	1500	394	1320	317	1158	259	**2000**	**663**	1705	461	1503	360	1329	291	1156	235
0.70	1952	726	1667	524	1455	406	1271	328	1107	269	**1954**	**681**	1663	474	1461	374	1278	303	1106	245
0.80	1912	743	1623	538	1408	418	1224	341	1052	280	**1928**	**694**	1624	488	1411	385	1227	313	1045	257
0.90	1876	758	1582	552	1366	432	1176	353	1003	291	**1890**	**712**	1576	502	1361	397	1175	324	989	268
1.00	1842	779	1543	567	1320	443	1128	365	947	302	**1853**	**728**	1541	517	1315	412	1122	335	912	282

BLOWER DATA

ML180UH110E60CK PERFORMANCE (Less Filter)

External Static Pressure in. w.g.	Air Volume / Watts at Different Blower Speeds																			
	Bottom Return Air, Side Return Air with Return Air from Both Sides or Return Air from Bottom and One Side.										**Single Side Return Air** − Air volumes in **bold** (over 1800 cfm) require Optional Return Air Base and field fabricated transition to accommodate 20 x 25 x 1 in. air filter in order to maintain proper air velocity.									
	High (Black)		**Medium-High** (Brown)		**Medium** (Blue)		**Medium-Low** (Yellow)		**Low** (Red)		**High** (Black)		**Medium-High** (Brown)		**Medium** (Blue)		**Medium-Low** (Yellow)		**Low** (Red)	
	cfm	**Watts**	**cfm**	**Watts**	**cfm**	**Watts**	**cfm**	**Watts**	**cfm**	**Watts**	**cfm**	**Watts**	**cfm**	**Watts**	**cfm**	**Watts**	**cfm**	**Watts**	**cfm**	**Watts**
0.10	2147	601	1917	421	1697	300	1550	240	1367	175	**2160**	**623**	**1902**	**427**	1679	303	1538	244	1354	179
0.20	2129	622	1857	427	1632	308	1501	249	1309	184	**2117**	**642**	**1854**	**440**	1626	318	1486	252	1309	189
0.30	2087	632	1822	441	1594	320	1436	256	1263	193	**2066**	**653**	**1805**	**453**	1579	326	1445	265	1265	198
0.40	2065	652	1787	454	1542	329	1401	270	1203	203	**2038**	**670**	1764	467	1541	336	1400	276	1210	208
0.50	2013	661	1743	464	1498	339	1343	278	1150	214	**2004**	**686**	1740	481	1493	347	1360	290	1155	219
0.60	1995	683	1701	477	1452	356	1294	291	1088	224	**1965**	**698**	1697	494	1450	360	1307	299	1097	228
0.70	1942	691	1651	492	1409	369	1243	305	1039	235	**1936**	**717**	1648	505	1409	369	1260	310	1038	235
0.80	1913	710	1617	507	1358	380	1193	313	974	245	**1906**	**731**	1605	518	1353	381	1206	315	986	246
0.90	1877	726	1570	521	1304	392	1158	328	- - -	- - -	**1842**	**724**	1566	534	1324	395	1160	328	929	256
1.00	1797	719	1545	539	1263	403	1090	339	- - -	- - -	1742	696	1529	546	1264	403	1112	339	873	267

ML180UH135E60DK PERFORMANCE (Less Filter)

External Static Pressure in. w.g.	Air Volume / Watts at Different Blower Speeds																			
	Bottom Return Air, Side Return Air with Return Air from Both Sides or Return Air from Bottom and One Side.										**Single Side Return Air** − Air volumes in **bold** (over 1800 cfm) require Optional Return Air Base and field fabricated transition to accommodate 20 x 25 x 1 in. air filter in order to maintain proper air velocity.									
	High (Black)		**Medium-High** (Brown)		**Medium** (Blue)		**Medium-Low** (Yellow)		**Low** (Red)		**High** (Black)		**Medium-High** (Brown)		**Medium** (Blue)		**Medium-Low** (Yellow)		**Low** (Red)	
	cfm	**Watts**	**cfm**	**Watts**	**cfm**	**Watts**	**cfm**	**Watts**	**cfm**	**Watts**	**cfm**	**Watts**	**cfm**	**Watts**	**cfm**	**Watts**	**cfm**	**Watts**	**cfm**	**Watts**
0.10	2441	700	2249	547	2036	403	1826	305	1647	231	**2388**	**698**	**2205**	**546**	**2005**	**411**	1808	309	1604	231
0.20	2384	726	2200	576	1978	428	1739	319	1569	249	**2309**	**722**	**2145**	**565**	**1939**	**429**	1738	327	1535	248
0.30	2336	760	2137	595	1895	442	1662	340	1507	265	**2275**	**749**	**2091**	**594**	**1866**	**447**	1675	344	1461	263
0.40	2269	784	2069	621	1837	472	1585	360	1430	281	**2208**	**773**	**2049**	**619**	**1812**	**469**	1606	363	1396	281
0.50	2211	799	2021	651	1771	487	1517	376	1346	294	**2193**	**802**	**1987**	**640**	1745	487	1534	381	1324	297
0.60	2186	836	1966	671	1710	508	1437	391	1271	311	**2138**	**827**	**1945**	**669**	1676	507	1481	400	1262	314
0.70	2107	835	1881	682	1633	525	1429	415	1201	328	**2071**	**833**	**1884**	**687**	1630	529	1411	417	1192	329
0.80	1979	802	1826	706	1598	550	1355	432	1091	348	**1948**	**798**	**1835**	**710**	1604	560	1344	433	1117	345
0.90	1817	742	1735	700	1512	567	1224	448	1000	361	1775	740	1709	689	1519	569	1282	451	876	361
1.00	1576	644	1525	634	1401	569	1124	467	927	376	1535	639	1514	619	1426	574	1220	469	786	377

REVISIONS

Sections	Description of Change
Blower Data	Updated.
New Section	IAQ Products added.

Visit us at www.lennox.com
For the latest technical information, www.LennoxPros.com
Contact us at 1-800-9-LENNOX

NOTE - Due to Lennox' ongoing commitment to quality, Specifications, Ratings and Dimensions subject to change without notice and without incurring liability.
Improper installation, adjustment, alteration, service or maintenance can cause property damage or personal injury.
Installation and service must be performed by a qualified installer and servicing agency.

©2025 Lennox Industries, Inc.