GAS FURNACES

EL180UHNE

ELITE® SERIES

Upflow / Horizontal - Constant Torque Blower Motor - 60 Hz

RESIDENTIAL PRODUCT SPECIFICATIONS

Bulletin No. 210801
March 2025
Supersedes all previous versions

ELITE® SERIES

AFUE - 80%
Meets NOx Limit of 14 ng/J
Input - 40,000 to 100,000 Btuh
Nominal Add-on Cooling - 1.5 to 5 Tons

MODEL NUMBER IDENTIFICATION

EL 1 80 UH 080 N E 48 B

Unit Type
EL = Elite® Series

Stages
1 = Single-Stage

AFUE
80 = 80%

Configuration
UH = Upflow/Horizontal

Nominal Gas Heat Input
040 = 40,000 Btuh
060 = 60,000 Btuh
080 = 80,000 Btuh
100 = 100,000 Btuh

Ultra-Low NOx
N = Units meet California Nitrogen Oxides Standard (14ng/J)

Blower
E = High Efficiency Constant Torque Blower Motor

Nominal Add-On Cooling Capacity
36 = 1.5-3 tons
48 = 2.5-4 tons
60 = 3-5 tons

[1] **Cabinet Width**
A = 14-1/2 in.
B = 17-1/2 in.
C = 21 in.

[1] Indoor coils with the same letter designation will physically match the furnace.

FEATURE HIGHLIGHTS

1. Heat Exchanger Assembly
2. Burner Orifice/Air Intake Assembly
3. SureLight® Hot Surface Ignitor
4. Modulating Gas Control Valve
5. Variable-Speed Combustion Air Inducer
6. Thermal Switch
7. Variable Speed Direct Drive Blower
8. SureLight® Integrated Furnace Control
9. Insulated Cabinet
10. Safety Interlock Switch
11. Gas Piping And Electrical Inlets

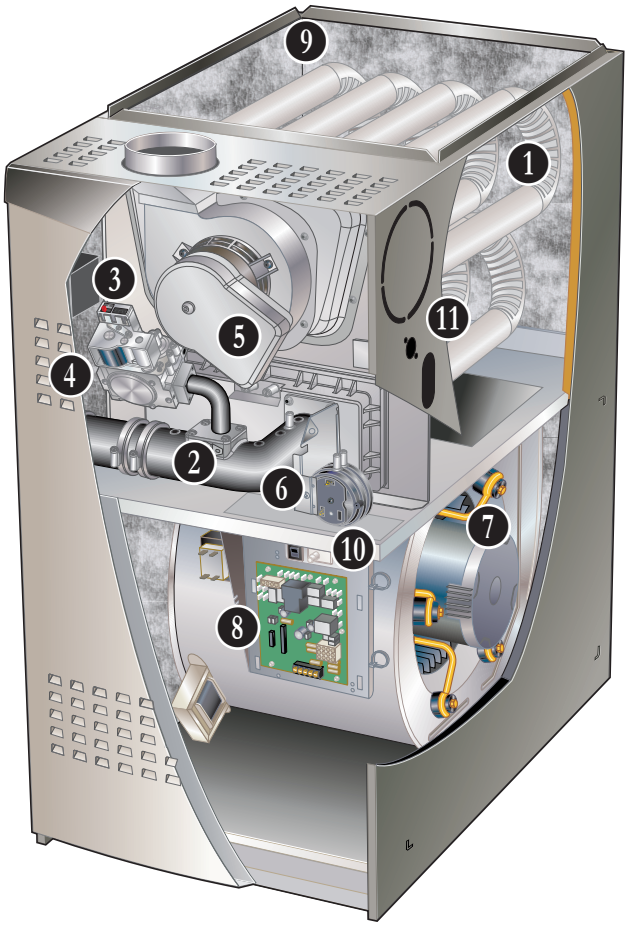

NOTE - EL180UHNE FURNACES ARE NATURAL GAS ONLY!
NOTE - EL180UHNE FURNACES ARE NOT AVAILABLE IN CANADA!
NOTE - NOT AVAILABLE IN ALL AREAS!
CONTACT YOUR NEAREST LENNOX SALES OFFICE FOR DETAILS.

CONTENTS

Blower Data 14
Approvals And Warranty 3
Dimensions 10
- Furnace/Coil Combined Dimensions 13
- Optional Accessories 12
- Unit - Horizontal Position 11
- Unit - Upflow Position 10
Features 3
Gas Heat Accessories 9
High Altitude Operation. 9
Installation Clearances 8
Model Number Identification. 1
Optional Accessories - Order Separately 9
Specifications 9

APPROVALS AND WARRANTY

APPROVALS

- AHRI Certified
- Tested and rated according to US DOE test procedures and FTC labeling regulations
- Approved by the California Energy Commission and meets California Nitrogen Oxides Standard (NOx) limits of 14 ng/J
- Units are approved for installations from 0-7500 ft. with no modification.
- ISO 9001 Registered Manufacturing Quality System
- Blower data from unit tests conducted in Lennox Laboratory air test chamber

NOTE - This furnace has not been CSA International design certified for installation in mobile homes, recreational vehicles, or outdoors.

California Only

- These furnaces **meet** the South Coast Air Quality Management District (SCAQMD) Rule 1111 and San Joaquin Valley Air Pollution Control District (SJVAPCD) Rule 4905 NOx emission limit (14 ng/J) and can be installed within the SCAQMD, SJVAPCD and Bay area

WARRANTY

- Heat Exchanger:
  - Limited twenty years in residential applications
  - Limited ten years in non-residential applications
- All other covered components:
  - Limited five years in residential installations
  - Limited one year in non-residential installations

NOTE - Refer to Lennox® Basic Limited Warranty at www.Lennox.com for additional details.

FEATURES

APPLICATIONS

- Input capacities of 40,000, 60,000, 80,000 and100,000 Btuh
- Energy efficiency (AFUE) - 80%
- Compact cabinet for upflow, horizontal-left or horizontal-right applications
- Utility room, alcove, closet, crawl space, basement or attic installation
- Lennox add-on indoor coils, high-efficiency air cleaners and humidifiers can easily be added to furnace
- Shipped factory assembled with all controls installed and wired
- Ready for installation in upflow or horizontal position without any modifications
- Removable bottom seal panel shipped in place for side return air is easily removed for bottom/end return air applications
- Each unit factory test operated to ensure proper operation

HEATING SYSTEM

NOTE - Units Are Natural Gas Only!

1 Heat Exchanger Assembly

- Heavy gauge aluminized steel heat exchanger
- Tubular type design
- Designed for normal expansion and contraction
- Round surfaces create minimum resistance to air flow for excellent heat transfer
- Heat exchanger has been laboratory life cycle tested in excess of industry standards
- Compact size of heat exchanger permits low overall design of furnace cabinet

2 Burner Orifice/Air Intake Assembly

- Burner assembly has a single orifice located between the gas valve and the air intake assembly
- Orifice is precisely matched to the burner input
- Burner can be removed for servicing

NOTE - Air Intake Termination is only available on the bottom of the cabinet with horizontal left-hand air discharge.
Air Intake Pipe must be FIRMLY secured in this position to prevent disconnection!

3 SureLight® Hot Surface Ignitor

- Tough, reliable, long-life, trouble-free performance
- Silicon nitride ignitor
- Cemented to steatite block for protection against current leakage
- Ignition leads are constructed of nickel plated copper and are enclosed in high temperature Teflon® insulation for dependable operation

4 Modulating Gas Control Valve

- 24 volt redundant combination modulating gas control valve combines manual shut off switch (On-Off), automatic electric valve (dual) and gas pressure regulation into a compact combination control

5 Variable-Speed Combustion Air Inducer

- Heavy duty variable-speed blower prepurges heat exchanger and safely vents flue products
- Pressure switch proves blower operation before allowing gas valve to open
- Operates only during heating cycle

HEATING SYSTEM (continued)

Air Intake Pipe Assembly (REQUIRED)

- Furnished for field installation outside the conditioned air stream
- Adds 4-1/2 in. (114 mm) to furnace width
- Consists of: (1) 2 in. PVC elbow, (1) PVC 3 x 2 in. reducer, (1) 2 in. PVC pipe and Inlet screen
- Assembly must be mounted on the left side of cabinet in upflow applications, see dimension drawings
- Assembly must be mounted above the cabinet in horizontal right-hand air discharge applications and below the cabinet in left-hand air discharge applications, see dimension drawings
- See installation instructions for additional information
- Assembly may be rotated if necessary to accommodate furnace installation

6 Thermal Switch

- Factory installed on air/fuel intake assembly
- Automatic reset
- Switch provides protection from abnormal operating conditions

Limit Control

- Primary limit is accurately located on vestibule panel on all units
- Automatic reset

Optional Accessories

Low Profile Air Intake Pipe Kit

- Replaces the required Air Intake Pipe Assembly furnished for reduced clearances in confined spaces
- Adds 2-3/4 in. (70 mm) to furnace width
- Consists of: (1) 2 in. PVC street elbow, (1) 2 in. PVC sweep elbow, (1) 2 in. PVC pipe and Inlet screen
- Intake air orifices are furnished for each size furnace
- Assembly must be mounted on the left side of cabinet in upflow applications
- Assembly must be mounted above the cabinet in horizontal right-hand air discharge applications and below the cabinet in left-hand air discharge applications
- Street and sweep elbows may be swiveled independently to different positions if necessary to accommodate furnace installation
- See kit installation instructions for additional information

Vent Adaptor (Upflow Applications Only)

- Allows venting through a masonry chimney without the need of a flue liner
- Manual reset temperature sensor protects against abnormal operating conditions
- Sensor wiring may be routed from either side of adaptor

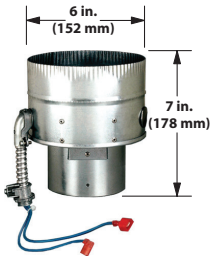

- Minimum winter design temperatures:
  - −10°F when used with interior masonry chimneys
  - +5°F when used with exterior masonry chimneys

NOTE - Refer to Winter Design Temperatures Map on page 9 for application information. Also refer to the installation instructions for detailed information.

Combustion Air Intake Muffler Kit

- Significantly reduces outdoor operating sound levels
- Installed vertically or horizontally in the intake piping
- See Optional Accessories Dimension Drawing

BLOWER

- Direct drive blower
- Statically and dynamically balanced
- Resiliently mounted
- Blower assembly easily removed for servicing

7 Power Saver™ Constant Torque Blower Motor

- DC Brushless Motor
- High Efficiency Constant Torque
- ECM (Electronically Commutated Motor)
- Motor is programmed to provide constant torque at each of the selectable speeds
- Motor is controlled by the Integrated Furnace Control
- Blower speeds are easily changed on the integrated furnace control
- See blower performance tables

FEATURES

CONTROLS

8 SureLight® Integrated Furnace Control

- Control contains all necessary controls and relays to operate furnace
- Combustion air inducer is operated by the integrated furnace control
- Prior to ignition, a pre-purge cycle for 15 seconds is initiated
- After the main burners are turned off, a post-purge cycle for 5 seconds is run
- Flame sensor assures safe and reliable operation
- Should loss of flame occur the integrated furnace control will initiate 4 re-attempts at ignition before locking out unit operation for 60 minutes
- Watchguard type circuit automatically resets ignition controls after one hour of continuous thermostat demand after unit lockout, eliminating nuisance calls for service
- Fan control consists of adjustable blower timed-off delay (60, 90, 120, 180 seconds - factory setting 90 seconds) and fixed blower timed-on delay (30 seconds - heating, 2 seconds - cooling)
- For air-conditioning applications, blower is automatically energized on thermostat demand for cooling
- Control has low speed continuous blower speed setting for humidifier or air cleaner operation
- Two accessory terminals furnished for additional power supply requirements for 120 volt (less than 1 amp) power humidifiers and powered air cleaners. One additional terminal is furnished for power supply requirements for 24V (less than 0.5 amp) low voltage accessories
- Ignition control has single red LED to indicate status and as an aid in troubleshooting
- Last five codes are stored in non-volatile memory (accessible by recall button on control) for servicing

24 Volt Transformer (40VA)

- Furnished and factory installed on outside of control box
- Circuit breaker (furnished) is wired in series

Field Wiring Make-up Box

- Furnished for line voltage wiring
- Factory installed internally on right side of furnace

NOTE - Box cannot be moved on "A" width models.
Box can be installed externally on right side of the furnace on "B and "C" width models.
Box can be installed internally or externally on left side of the furnace on "B and "C" width models.

Optional Accessories

E30 Smart Wi-Fi Thermostat

- Wi-Fi enabled, electronic 7-day, universal, multi-stage, programmable, touchscreen thermostat
- 3 Heat/2 Cool
- Auto-changeover
- Controls dehumidification during cooling mode and humidification during heating mode

- Offers enhanced capabilities including humidification / dehumidification / dewpoint measurement and control, Humiditrol® control, and equipment maintenance reminders
- Easy to read 7 in. color touchscreen (measured diagonally)
- LCD display with backlight shows the current and set temperature, time, inside relative humidity, system status (operating mode and schedules) and outside temperature (optional outdoor sensor required)
- Smooth Setback Recovery starts system early to achieve setpoint at start of program period
- Compressor short-cycle protection (5 minutes)
- Up to four separate schedules are available plus Schedule IQ™
- One-Touch Away Mode - A quick and easy way to set the cooling and heating setpoints while away
- Smart Away™ - Uses geo-fencing technology to determine when the homeowner is within a predetermined distance from the home to operate the system when leaving, away and arriving
- Wi-Fi remote monitoring and adjustment through a home wireless network for desktop PCs, laptops and apps for smartphones or tablets
- Smart home automation compatible with Apple HomeKit™, Amazon Alexa® and Google Assistant
- Service Dashboard features online real-time monitoring of installed Lennox® thermostats
- High Definition Color Display and Subbase, Smart Hub Controller, wallplate (for retrofit installations) furnished for easy installation
- See the Lennox® E30 Smart Wi-Fi Thermostat Product Specifications bulletin for more information

Remote Outdoor Temperature Sensor

- Used with the Lennox® E30 Smart Wi-Fi Thermostat
- When installed outdoors, sensor allows thermostat to display outdoor temperature

NOTE - Sensor is required for Enhanced Dehumidification Control (EDA) applications.

CONTROLS (continued)

Thermostat
- Thermostat is not furnished with unit
- See Lennox Price Book for selection

Blower Relay Kit
(For Use With Two-Stage Outdoor Units)
- Allows furnace blower speed changes when matched with two-stage air conditioners or heat pumps

Furnace Twinning Panel
- Required to operate two identical furnaces simultaneously from a single thermostat
- For single stage conventional (1 heat/1 cool), multi-stage conventional (2 heat/2 cool) and heat pump (3 heat/2 cool) equipment
- Can be used with common or separate ducted systems
- Contains PC Control Board with terminal strip connections for thermostat and HVAC equipment
- LEDs indicate system operating status
- Uses standard 18-gauge thermostat wire
- Power Supply: 24 VAC, 40VA (transformer not furnished)
- Mounting base with hardware furnished
- Dimensions (H x W x D): 10 x 5 x 2 in.

NOTE - Only identical furnaces should be twinned in order to ensure that both furnace blowers start at the same time. If furnaces are not identical, back draft dampers can be installed in either the supply or return duct.

Up to four identical furnaces can be twinned. Requires two panels that are wired together.

Furnace Twinning Kit
- Required to operate two furnaces simultaneously
- Kit consists of twinning relays, quick connect terminals and mounting hardware
- Used for single-stage heating/single-stage cooling with a single-stage thermostat

Transformer (75VA)
- Recommended when furnace is used with zoning or defrost thermostats and other 24V accessories requiring a higher VA rating
- Circuit breaker (furnished) is wired in series
- Replaces the standard 40VA transformer

FILTER (not furnished)

- Filter and provisions for external mounting must be field provided

Optional Accessories

Air Filter and Rack Kit for Horizontal Return Air (End) Applications
- Washable or vacuum cleanable polyurethane frame type filter and external end return air rack
- Rack has filter door for servicing
- Flanges on rack for duct connection
- Field installed
- See dimension drawing

Air Filter and Rack Kit for Upflow Side Return Air
NOTE - Not for use with Return Air Base
- Washable or vacuum cleanable polyurethane frame type filter and external side return air rack available for field installation
- Available in single and ten pack kits
- Rack has filter door for servicing
- Flanges on rack for duct connection
- Field installs on either side of unit cabinet
- See dimension drawing

CABINET

NOTE - Flue outlet is on top of the cabinet only!
In the upflow position the flue must be vented vertically.
In the horizontal position the flue must be vented vertically immediately after exiting the cabinet!

- Low-profile, narrow width cabinet allows easy installation
- Heavy-gauge, cold rolled steel construction
- Pre-painted cabinet finish
- Flanges provided on supply air opening for ease of plenum connection or alignment with indoor coil
- 9 Insulated cabinet with foil faced insulation on sides and back of heating compartment and mat faced insulation in blower compartment
- Sealed blower compartment
- Inner blower compartment access panel seals blower compartment from air leakage
- Cabinet door can be removed without any tools
- Complete service access
- 10 Safety interlock switch automatically shuts off power to unit when blower compartment access panel is removed
- 11 Gas piping and electrical inlets are provided in both sides of cabinet on “B” and “C” width models.

NOTE - Gas piping is only available on the left side of the cabinet on “A” width models.

FEATURES

CABINET (continued)

Bottom/Side Return Air Entry:

- Upflow/horizontal with bottom return air entry:
  - Remove furnished bottom seal panel from cabinet
- Upflow only with side return-air entry ("B' and "C" width cabinets only):
  - Corners are marked on either side of cabinet for return air cut-out
- See dimension drawings

NOTE - 60C size units that require air volumes over 1800 cfm must have one of the following:

- Single side return air and Optional Return Air Base with transition that must accommodate required 20 x 25 x 1 inch air filter to maintain proper velocity
- Bottom return air
- Return air from both sides
- Bottom and one side return air
- See Blower Performance Tables for additional information

Coil Match-Up

- All furnaces exactly match Lennox cased upflow indoor coils and horizontal indoor coils with same letter designation (A, B, C, D) in model number
- No adaptor required
- Engaging holes furnished on cabinet for alignment
- Lennox uncased coils match furnaces without any overhang but require an optional adaptor base or field fabricated transition to match furnace opening
- See coil bulletin for additional information

Low Leakage Cabinet

- All models have less than 2% air leakage
- Meets ANSI/ASHRAE Standard 193-2010 "Method of Test for Determining the Air Tightness of HVAC Equipment"

Optional Accessories

Horizontal Suspension Kit

- Provides suspension of unit and indoor coil in horizontal applications
- Allows complete service access
- Consists of corner mounted hanging brackets with vibration isolators, return air end support rail and hardware for assembly
- Metal hanging straps must be field provided

Return Air Base

NOTE - On furnaces with side return air and condensate trap on the same side of the cabinet, a field fabricated transition or Return Air Base is required when using an IAQ product higher than 14-3/16 inches installed next to the unit and serviced from the front. IAQ products higher than 20 inches require a field fabricated transition.

NOTE - Must be used for 60C size models with air volumes over 1800 cfm in upflow applications when only one side return is required.

- Cabinet is shipped flat for easy field assembly
- Pre-painted steel to match the furnace
- See Dimension Drawing

High Performance Economizer
(Commercial Applications Only)

- Designed for applications requiring outdoor air to be utilized in a commercial HVAC system
- Allows the entry of fresh outdoor air for free cooling, reducing the requirement for mechanical cooling
- Heavy gauge galvanized steel cabinet lined with thick fiberglass insulation
- Mixed air sensor, outdoor air sensor and 24VAC transformer furnished
- Approved for California Title 24 building standards. ASHRAE 90.1-2010 compliant
- See separate Product Specifications bulletin for additional information and available control and sensor options

REFRIGERATION DETECTION SYSTEM (RDS)

Optional Accessories

Refrigerant Detection System (RDS) Coil Sensor Kit

- Complies with UL 60335-2-40 approved standard
- Required for field installation for all systems using R-454B refrigerant if sensor is not furnished with coil
- Consists of Refrigerant Detection System (RDS) sensor, lineset sleeves, mounting brackets and A2L labeling
- Sensor ensures safe operation for systems equipped with R-454B refrigerant
- Sensor will detect any R-454B refrigerant

Refrigerant Detection System (RDS) Blower Control Board

Communicating Blower Control Board (Universal)

- Communicating Blower Control Board and Sensor can be used universally with any Lennox® communicating furnace or any non-communicating 24 volt furnace

Non-Communicating Blower Control Board

- Non-Communicating Blower Control Board and Sensor can be used with any non-communicating 24 volt furnace

Standard Features

- Complies with UL 60335-2-40 approved standard
- Required for all systems using R-454B refrigerant
- Connects to the RDS sensor furnished with the RDS Coil Sensor Kit
- Supports up to two RDS Sensors (factory setting)
- Used as an interface between indoor unit and thermostat to control system
- Ensures safe operation for systems equipped with R-454B refrigerant
- If R-454B refrigerant is detected, the refrigerant detection system will stop compressor and/or heating operation and operate the blower to reduce concentrations in the conditioned space
- Once safe levels are reached the HVAC system will resume normal operation
- Multi-color LED for system status and as an aid in troubleshooting
  - Flashing LED codes for system status (Green/Blue) and diagnosing Sensor errors (Red)
- Alarm relay can trigger an external alarm if R-454B refrigerant is detected
- Zone relay opens all zone dampers (if part of a zoning system) if R-454B refrigerant is detected
- Power is disabled to non-communicating thermostats to prevent demand if R-454B refrigerant is detected
- On system start-up blower will run for five minutes and any thermostat demands are disabled
- Dimensions (H x W x D): 7-7/16 x 7-7/16 x 2-1/2 (189 x 189 x 127 mm)

NOTE - See Refrigerant Detection System (RDS) Components Table on page <?>.

See the CK40 Indoor Coil Product Specifications bulletins for more information.

Refer to the Installation Instructions for additional information.

99% WINTER DESIGN TEMPERATURES FOR THE CONTIGUOUS UNITED STATES

This map is a necessarily generalized guide to temperatures in the contiguous Unites States. Temperatures shown for areas such as mountainous regions and large urban centers may not be accurate. The data used to develop this map was taken from the 1993 ASHRAE Fundamentals Handbook (Chapter 24, Table 1: Climate Conditions for the United States).

Reprinted with permission from NFPA 54: National Fuel Gas Code 1999, National Fire Protection Association, Quincy, MA 02269. This reprinted material is not the complete and official position of the National Fire Protection Association on the referenced subject, which is represented only by the standard in its entirety.

INSTALLATION CLEARANCES

UPFLOW POSITION

Vent Type	Type B1	Type C
Sides	1 (25)	[1] 1 (25)
Left Side with furnished Air Intake Pipe Assembly	4-1/2 (114)	4-1/2 (114)
Left Side with Optional Low Profile Air Intake Pipe Kit	2-3/4 (70)	2-3/4 (70)
Rear	1 (25)	1 (25)
Top	1 (25)	1 (25)
Front	[1] 2-1/4 (57)	[2] 2-1/4 (57)
Front (service/alcove)	24 (610)	24 (610)
Floor	Combustible	Combustible
Flue	1 (25)	6 (152)

NOTE − Air for combustion must conform to the methods outlined in the National Fuel Gas Code (NFPA 54/ANSI-Z223.1).

NOTE − In the U.S. flue sizing must conform to the methods outlined in the current National Fuel Gas Code (NFPA 54/ANSI-Z223.1) or applicable provisions of local building codes.

[1] Left side requires 3 in. if single wall vent is used on 14-1/2 in. cabinets, 2 in. on 17-1/2 in. cabinets.

[2] 4-1/2 in. if single wall vent pipe is used.

HORIZONTAL POSITION

Vent Type	Type B1	Type C
End	[1] 2	[1] 2
Rear	1 (25)	1 (25)
Top	[1] 1 (25)	[1] 1 (25)
Top or Bottom with furnished Air Intake Pipe Assembly	4-1/2 (114)	4-1/2 (114)
Top or Bottom with Optional Low Profile Air Intake Pipe Kit	2-3/4 (70)	2-3/4 (70)
Front	2-1/4 (57)	2-1/4 (57)
Front (service)	24 (610)	24 (610)
Floor	Combustible	Combustible
Flue	1 (25)	6 (152)

NOTE − Air for combustion must conform to the methods outlined in the National Fuel Gas Code (NFPA 54/ANSI-Z223.1).

NOTE − In the U.S. flue sizing must conform to the methods outlined in the current National Fuel Gas Code (NFPA 54/ANSI-Z223.1) or applicable provisions of local building codes.

[1] Line contact installation permissible between jacket top or sides and building joists.

SPECIFICATIONS

	Model No.	EL180UH040NE36A	EL180UH060NE36A	EL180UH080NE48B	EL180UH100NE60C
Gas Heating Performance	[1] AFUE	80%	80%	80%	80%
	Input - Btuh	40,000	60,000	80,000	100,000
	Output - Btuh	33,000	48,000	64,000	80,000
	Temperature rise range - °F	20 - 50	30 - 60	30 – 60	35 – 65
Gas Manifold Pressure (in. w.g.) Nat. Gas Only		0.05	0.05	0.05	0.05
High Static - in. w.g.		0.50	0.50	0.50	0.50
Connections	Flue connection - in. round	4	4	4	4
	[2] Air Intake - in. round	2	2	2	2
	Gas pipe size IPS	1/2	1/2	1/2	1/2
Indoor Blower	Wheel nominal dia. x width - in.	10 x 8	10 x 8	10 x 10	11-1/2 x 10
	Motor Type	DC Brushless	DC Brushless	DC Brushless	DC Brushless
	Motor output - hp	1/2	1/2	3/4	1
	Tons of add-on cooling	1.5 - 3	1.5 - 3	2.5 - 4	3 - 5
	Air Volume Range - cfm	350 - 1380	395 - 1415	750 - 1785	920 - 2315
Electrical Data	Voltage	120 volts - 60 hertz - 1 phase			
	Blower motor full load amps	6.8	6.8	8.4	10.9
	Maximum overcurrent protection	15	15	15	15
Shipping Data	lbs. - 1 package	119	119	140	157

NOTE - Filters and provisions for mounting are not furnished and must be field provided.

[1] Annual Fuel Utilization Efficiency based on DOE test procedures and according to FTC labeling regulations. Isolated combustion system rating for non-weatherized furnaces.

[2] Requires furnished Air Intake Pipe Assembly.

OPTIONAL ACCESSORIES - ORDER SEPARATELY

		"A" Width Models	"B" Width Models	"C" Width Models
CABINET ACCESSORIES				
Horizontal Suspension Kit - Horizontal only		**51W10**	**51W10**	**51W10**
Return Air Base - Upflow only		**N/A**	**50W98**	**50W99**
High Performance Economizer (Commercial Only)		**10U53**	**10U53**	**10U53**
CONTROLS				
E30 Smart Wi-Fi Thermostat		**20A65**	**20A65**	**20A65**
Remote Outdoor Temperature Sensor		**X2658**	**X2658**	**X2658**
Blower Relay Kit (for two-stage outdoor units)		**85W66**	**85W66**	**85W66**
Furnace Twinning Panel		**Y3653**	**Y3653**	**Y3653**
Furnace Twinning Kit		**16W72**	**16W72**	**16W72**
Transformer (75VA)		**27J32**	**27J32**	**27J32**
FILTERS				
[1] Air Filter and Rack Kit	Horizontal (end)	**87L95**	**87L96**	**87L97**
	Size of filter - in.	14 x 25 x 1	18 x 25 x 1	20 x 25 x 1
	Side Return Single	**N/A**	**44J22**	**44J22**
	Ten Pack	**N/A**	**66K63**	**66K63**
	Size of filter - in.	**N/A**	16 x 25 x 1	16 x 25 x 1
INTAKE / VENTING				
Combustion Air Intake Muffler Kit		**29K98**	**29K98**	**29K98**
Low Profile Air Intake Pipe Kit - 2 in.		**25B23**	**25B23**	**25B23**
Vent Adaptor − 6 in. conn. size upflow applications only		**18M79**	**18M79**	**18M79**

[1] Cleanable polyurethane, frame-type filter.

HIGH ALTITUDE OPERATION

Units may be installed at altitudes up to 7500 ft. above sea level without any modification.

REFRIGERANT DETECTION SYSTEM (RDS) COMPONENTS

Description		Order No.
Refrigerant Detection System (RDS) Coil Sensor Kit		**26Z69**
Refrigerant Detection System (RDS) Blower Control Board	Any Lennox® Communicating Furnace or any Non-Communicating 24V Furnace (Universal)	**27A03**
	Any Non-Communicating 24V Furnace	**27A02**

NOTE - Communicating Blower Control Board and Sensor can be used universally with Lennox® communicating furnace or any non-communicating 24 volt furnace. Non-Communicating Blower Control Board and Sensor can be used with any non-communicating 24 volt furnace.

[1] NOTE - 60C size units that require air volumes over 1800 cfm must have one of the following:

1. Single side return air and Optional Return Air Base with transition that must accommodate required 20 x 25 x 1 inch (508 x 635 x 25 mm) air filter to maintain proper velocity.
2. Bottom return air.
3. Return air from both sides.
4. Bottom and one side return air.

See Blower Performance Tables for additional information.

[2] Flue outlet is only on top of furnace **must** be vented vertically.

[3] Optional External Side Return Air Filter Kit is not for use with the optional Return Air Base.

[4] Optional External Side Return Air Filter Kit is not available for "A" width cabinets.

[5] 2-3/4 in. (70 mm) for optional Low Profile Air Intake Pipe Kit.

[6] NOTE - Gas entry is only available on the left side of the cabinet for "A" width cabinet models.

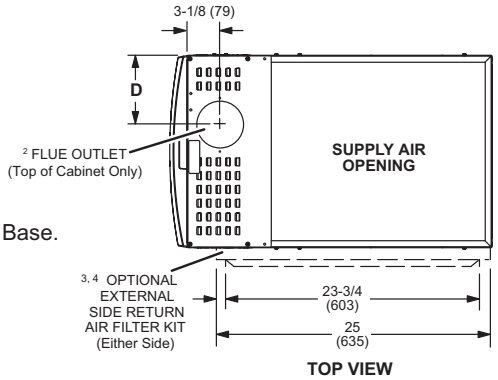

TOP VIEW

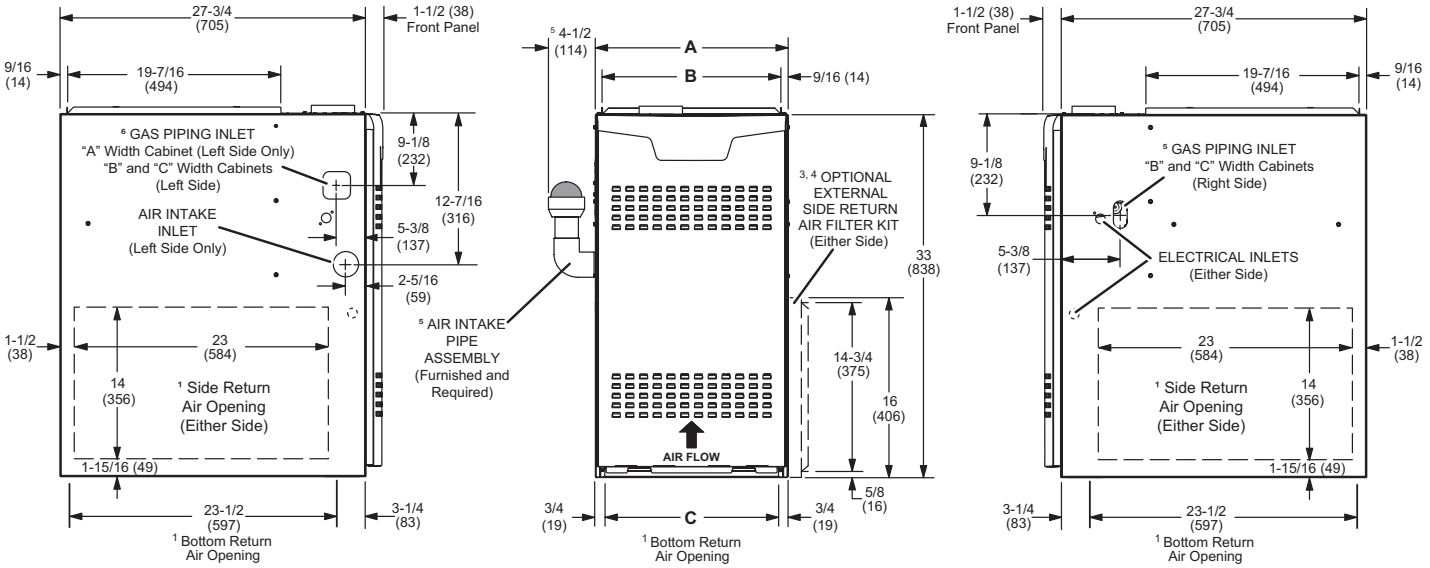

Model No.	A		B		C		D	
	in.	mm	in.	mm	in.	mm	in.	mm
EL180UH040NE36A EL180UH060NE36A	14-1/2	368	13-3/8	340	13	330	4-3/4	121
EL180UH080NE48B	17-1/2	446	16-3/8	416	16	406	6-1/4	159
EL180UH100NE60C	21	533	19-7/8	504	19-1/2	495	8	203

LEFT-HAND AIR DISCHARGE

NOTE - Air Intake Termination is only available on the bottom of the cabinet with left-hand air discharge.
NOTE - Air Intake Pipe must be FIRMLY secured in this position to prevent disconnection!

[1] NOTE - Gas entry is only available on the bottom of the cabinet for "A" width cabinet models with left-hand air discharge.

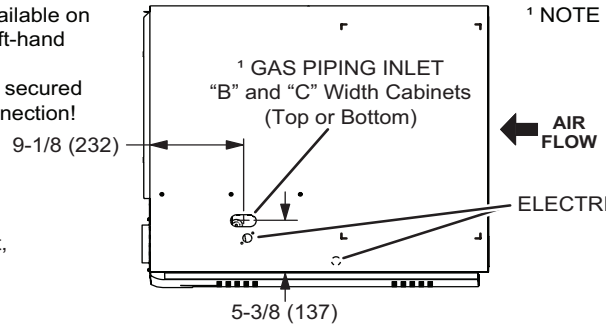

[2] Flue outlet is horizontal on cabinet, but flue must be vented vertically immediately after exiting cabinet!

TOP VIEW

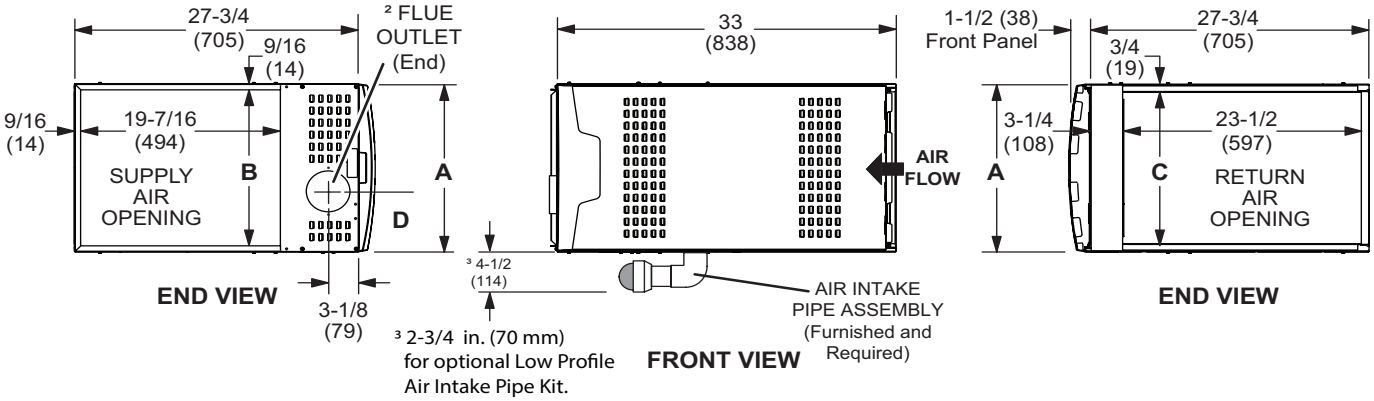

[3] 2-3/4 in. (70 mm) for optional Low Profile Air Intake Pipe Kit.

RIGHT-HAND AIR DISCHARGE

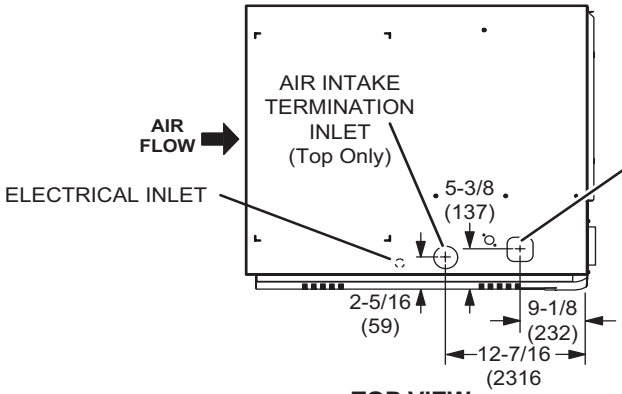

GAS PIPING INLET
"A" Width Cabinet
(Top Only)
"B" and "C" Width Cabinets
(Top or Bottom)

[2] Flue outlet is horizontal on cabinet, but flue must be vented vertically immediately after exiting cabinet!

[3] 2-3/4 in. (70 mm) for optional Low Profile Air Intake Pipe Kit.

TOP VIEW

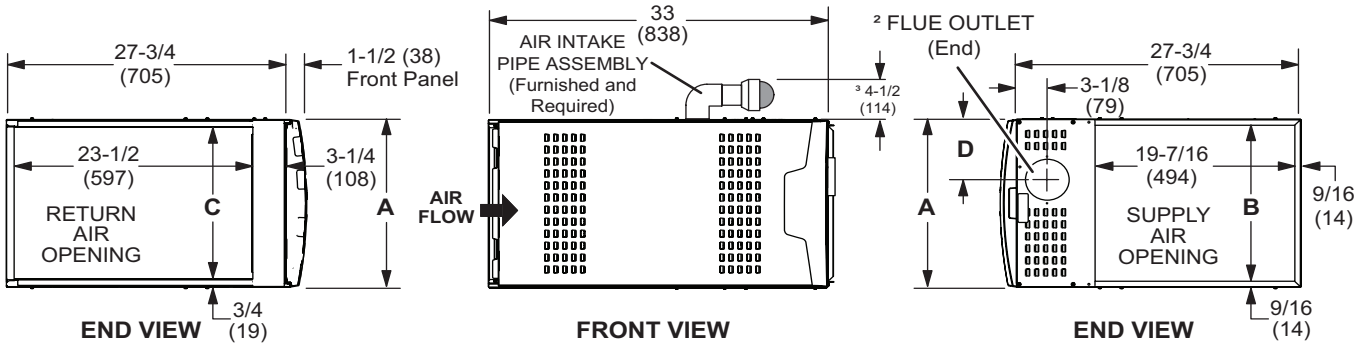

Model No.	A		B		C		D	
	in.	mm	in.	mm	in.	mm	in.	mm
EL180UH040NE36A EL180UH060NE36A	14-1/2	368	13-3/8	340	13	330	4-3/4	121
EL180UH080NE48B	17-1/2	446	16-3/8	416	16	406	6-1/4	159
EL180UH100NE60C	21	533	19-7/8	504	19-1/2	495	8	203

HORIZONTAL (END) FILTER KIT

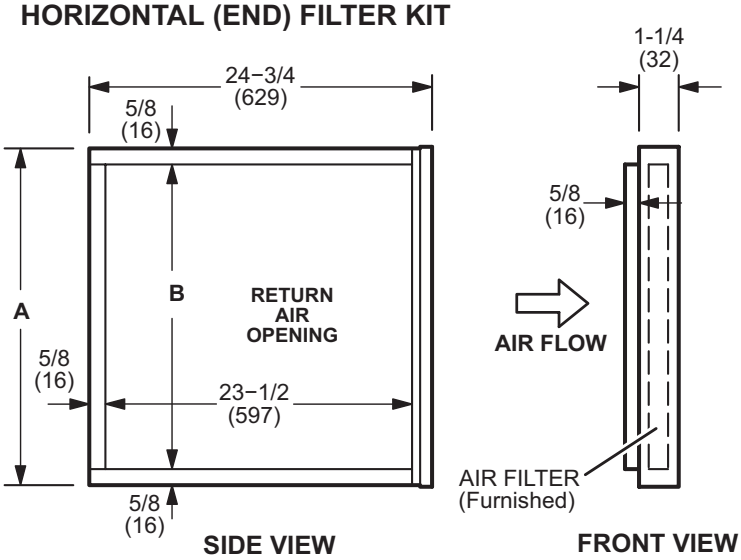

Furnace Cabinet Width	Catalog Number	A		B	
		in.	mm	in.	mm
A	87L95	14	356	12-3/4	324
B	87L96	18	457	16-3/4	425
C	87L97	21	533	18-3/4	476

COMBUSTION AIR INTAKE MUFFLER KIT
29K98 - 2-inch

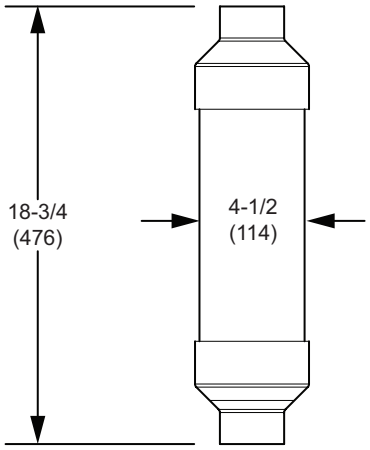

(Muffler can be installed in horizontal or vertical position on the intake pipe.)

Optional Return Air Base
(Upflow Applications Only - For use with B and C width cabinets)

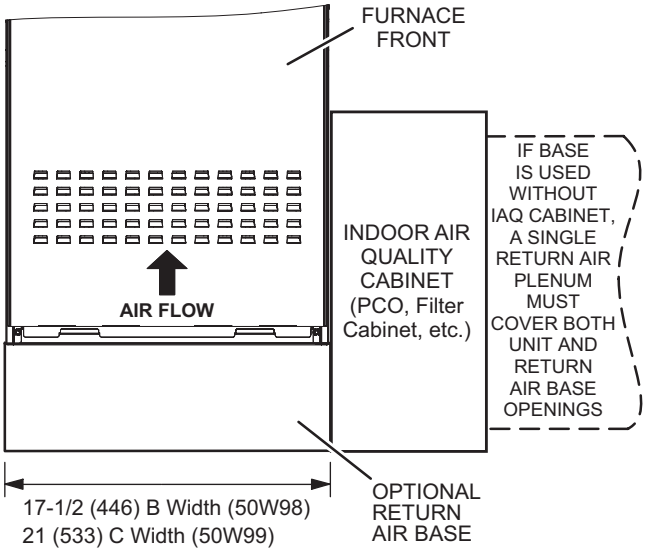

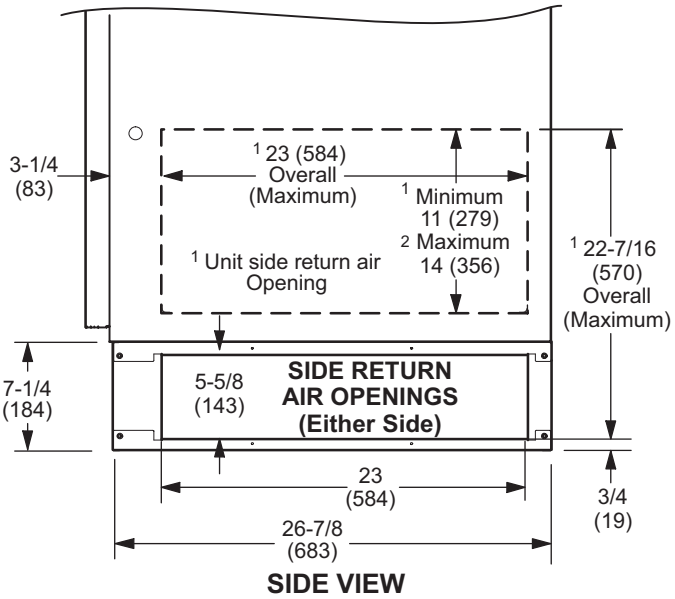

NOTE- Optional Side Return Air Filter Kits are not for use with Optional Return Air Base.

[1] Both the unit return air opening and the base return air opening must be covered by a single plenum or IAQ cabinet. Minimum unit side return air opening dimensions for units requiring 1800 cfm or more of air (W x H): 23 x 11 in. (584 x 279 mm). The opening can be cut as needed to accommodate plenum or IAQ cabinet while maintaining dimensions shown. Side return air openings must be cut in the field. There are cutting guides stenciled on the cabinet for the side return air opening. The size of the opening must not extend beyond the markings on the furnace cabinet.

[2] To minimize pressure drop, the largest opening height possible, up to 14 in. (356 mm), is preferred.

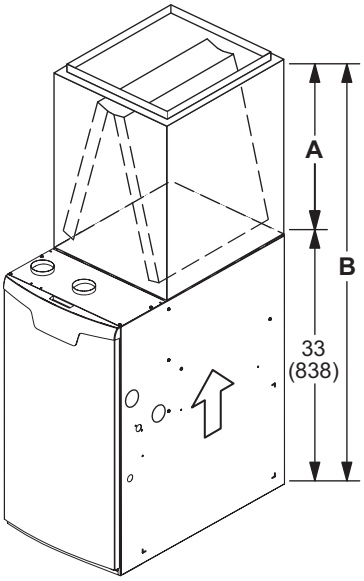

UPFLOW POSITION - CASED

Model		A		B	
CK40CT	**C35/CX35**	**in.**	**mm**	**in.**	**mm**
CK40CT-18/24A CK40CT-18/24B	C35/CX35-18/24A C35/CX35-18/24B	16-1/2	419	49-1/2	1257
CK40CT-24A CK40CT-24B	C35/CX35-24A C35/CX35-24B	18-1/2	470	51-1/2	1308
CK40CT-30A CK40CT-30B	C35/CX35-30A C35/CX35-30B	22-1/2	572	55-1/2	1410
CK40CT-30/36A CK40CT-30/36B CK40CT-30/36C	C35/CX35-30/36A C35/CX35-30/36B C35/CX35-30/36C	24-1/2	622	57-1/2	1461
CK40CT-36A CK40CT-36B	C35/CX35-36A C35/CX35-36B	24-1/2	622	57-1/2	1461
CK40CT-48B CK40CT-48C	C35/CX35-48B C35/CX35-48C	27-1/2	699	60-1/2	1537
CK40CT-49C	C35/CX35-49C	29-1/2	749	62-1/2	1588
CK40CT-50/60C	C35/CX35-50/60C	27-1/2	699	60-1/2	1537
CK40CT-60C	CX35-60C	31-1/2	800	64-1/2	1638

UPFLOW POSITION - UNCASED

Model		A		B	
CK40UT	**C35**	**in.**	**mm**	**in.**	**mm**
CK40UT-18/24A CK40UT-18/24B	C35-18/24A C35-18/24B	14-1/8	359	47-1/8	1197
CK40UT-24A CK40UT-24B	C35-24A C35-24B	16-3/8	416	49-3/8	1254
CK40UT-30A CK40UT-30B	C35-30A C35-30B	20-3/4	527	53-3/4	1365
CK40UT-30/36A CK40UT-30/36B CK40UT-30/36C	C35-30/36A C35-30/36B C35-30/36C	22-1/4	565	55-1/4	1403
CK40UT-36A CK40UT-36B	C35-36A C35-36B	22-3/8	568	55-3/8	1407
CK40UT-48B CK40UT-48C	C35-48B C35-48C	26-1/4	667	59-1/4	1505
CK40UT-49C	C35-49C	28-1/2	724	61-1/2	1562
CK40UT-50/60C	C35-50/60C	25-7/8	657	58-7/8	1495
CK40UT-60C	C35-60C	30-5/8	778	63-5/8	1616

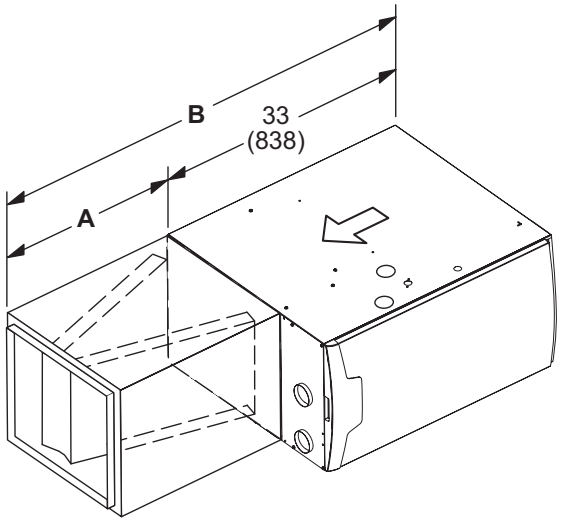

HORIZONTAL POSITION

Model		A		B	
CK40HT	**CHX35**	**in.**	**mm**	**in.**	**mm**
CK40HT-18A CK40HT-24A CK40HT-24B CK40HT-30B CK40HT-36A CK40HT-36B CK40HT-36C CK40HT-42C CK40HT-48C	CHX35-18A CHX35-24A CHX35-24B CHX35-30B CHX35-36A CHX35-36B CHX35-36C CHX35-42C CHX35-48C	26-1/2	673	59-1/2	1511
CK40CT-30A CK40CT-42B CK40CT-48B CK40CT-51/61C	CHX35-30A CHX35-42B CHX35-48B CHX35-51/61C	31-1/2	880	64-1/2	1638

EL180UH040NE36A PERFORMANCE (Less Filter)

External Static Pressure in. w.g.	Air Volume / Watts at Various Blower Speeds									
	High (Black)		Medium-High (Brown)		Medium (Blue)		Medium-Low (Yellow)		Low (Red)	
	cfm	Watts	cfm	Watts	cfm	Watts	cfm	Watts	cfm	Watts
0.00	1423	235	1194	141	1079	107	1100	107	1101	109
0.10	1389	251	1146	156	1007	111	963	98	945	94
0.20	1355	267	1098	171	935	115	826	89	789	79
0.30	1315	280	1068	184	881	126	768	97	646	75
0.40	1278	287	1022	194	837	133	709	108	593	84
0.50	1247	303	978	203	782	144	646	116	529	92
0.60	1199	317	948	216	719	151	602	126	471	102
0.70	1176	328	899	228	679	163	537	131	422	106
0.80	1128	344	860	235	627	172	500	141	382	115
0.90	1075	347	821	246	577	179	454	146	320	118
1.00	966	322	771	256	546	188	416	154	292	121

EL180UH060NE36A PERFORMANCE (Less Filter)

External Static Pressure in. w.g.	Air Volume / Watts at Various Blower Speeds									
	High (Black)		Medium-High (Brown)		Medium (Blue)		Medium-Low (Yellow)		Low (Red)	
	cfm	Watts	cfm	Watts	cfm	Watts	cfm	Watts	cfm	Watts
0.00	1423	235	1194	141	1079	107	1100	107	1101	109
0.10	1389	251	1146	156	1007	111	963	98	945	94
0.20	1355	267	1098	171	935	115	826	89	789	79
0.30	1315	280	1068	184	881	126	768	97	646	75
0.40	1278	287	1022	194	837	133	709	108	593	84
0.50	1247	303	978	203	782	144	646	116	529	92
0.60	1199	317	948	216	719	151	602	126	471	102
0.70	1176	328	899	228	679	163	537	131	422	106
0.80	1128	344	860	235	627	172	500	141	382	115
0.90	1075	347	821	246	577	179	454	146	320	118
1.00	966	322	771	256	546	188	416	154	292	121

EL180UH080NE48B PERFORMANCE (Less Filter)

External Static Pressure in. w.g.	Air Volume / Watts at Various Blower Speeds									
	High (Black)		Medium-High (Brown)		Medium (Blue)		Medium-Low (Yellow)		Low (Red)	
	cfm	Watts	cfm	Watts	cfm	Watts	cfm	Watts	cfm	Watts
0.00	1881	400	1709	276	1560	221	1495	189	1293	135
0.10	1828	419	1640	297	1503	238	1440	209	1240	147
0.20	1775	438	1571	318	1446	255	1385	229	1187	159
0.30	1727	457	1515	335	1393	275	1323	244	1110	173
0.40	1676	473	1477	349	1340	292	1263	259	1058	190
0.50	1632	490	1422	376	1290	309	1200	276	991	201
0.60	1575	509	1370	391	1227	326	1154	290	922	218
0.70	1502	507	1309	407	1171	343	1092	305	869	232
0.80	1335	460	1267	422	1114	357	1043	320	804	243
0.90	1115	395	1091	381	1047	367	984	334	735	255
1.00	829	310	845	322	846	318	858	321	669	266

EL180UH100NE60C (Less Filter)

External Static Pressure in. w.g.	Air Volume / Watts at Different Blower Speeds																			
	Bottom Return Air, Side Return Air with Return Air from Both Sides or Return Air from Bottom and One Side.										**Single Side Return Air** - Air volumes in **bold** (over 1800 cfm) require Optional Return Air Base and field fabricated transition to accommodate 20 x 25 x 1 in. air filter in order to maintain proper air velocity.									
	High (Black)		**Medium-High** (Brown)		**Medium** (Blue)		**Medium-Low** (Yellow)		**Low** (Red)		**High** (Black)		**Medium-High** (Brown)		**Medium** (Blue)		**Medium-Low** (Yellow)		**Low** (Red)	
	cfm	**Watts**	**cfm**	**Watts**	**cfm**	**Watts**	**cfm**	**Watts**	**cfm**	**Watts**	**cfm**	**Watts**	**cfm**	**Watts**	**cfm**	**Watts**	**cfm**	**Watts**	**cfm**	**Watts**
0.00	2267	611	2001	416	1747	286	1637	235	1591	196	**2290**	**613**	**2030**	**401**	**1841**	**275**	1651	227	1629	198
0.10	2216	637	1961	438	1707	305	1576	245	1457	193	**2245**	**633**	**1980**	**427**	1763	299	1592	240	1486	194
0.20	2165	663	1921	460	1667	324	1515	255	1323	190	**2199**	**653**	**1931**	**454**	1685	323	1533	253	1343	189
0.30	2129	684	1853	486	1624	344	1460	275	1262	208	**2147**	**678**	**1876**	**474**	1640	343	1470	273	1276	205
0.40	2060	710	1818	508	1559	365	1401	294	1193	222	**2110**	**702**	**1815**	**491**	1574	358	1424	292	1198	219
0.50	2030	726	1775	526	1515	380	1346	317	1134	238	**2064**	**725**	1777	516	1525	375	1360	312	1134	236
0.60	1985	749	1707	547	1453	401	1312	332	1080	252	**2025**	**744**	1726	533	1476	398	1311	330	1083	253
0.70	1931	769	1662	567	1405	419	1238	346	1012	269	**1973**	**765**	1673	558	1417	420	1243	344	1025	268
0.80	1882	789	1617	586	1364	438	1190	364	946	278	**1925**	**788**	1636	577	1372	436	1193	361	955	277
0.90	1832	807	1565	606	1317	457	1135	381	893	294	**1883**	**806**	1575	597	1312	457	1148	378	908	148
1.00	1727	772	1533	623	1244	468	1059	397	823	304	1785	789	1531	616	1263	469	1089	390	838	301

REVISIONS

Sections	Description of Change
Options/Accessories	Added new Combustion Air Intake Muffler

Visit us at www.Lennox.com
For the latest technical information, www.LennoxPros.com
Contact us at 1-800-9-LENNOX

NOTE - Due to Lennox' ongoing commitment to quality, Specifications, Ratings and Dimensions subject to change without notice and without incurring liability.
Improper installation, adjustment, alteration, service or maintenance can cause property damage or personal injury.
Installation and service must be performed by a qualified installer and servicing agency.

©2025 Lennox Industries, Inc.