AIR CONDITIONERS

EL15KC1

ELITE® SERIES

Single Stage | Quantum™ Coil | R-454B | 60Hz

RESIDENTIAL
PRODUCT SPECIFICATIONS (EHB)

1.5 to 5 Tons
SEER2 up to 16.0
Cooling Capacity | 17,000 to 59,000 Btuh

ELITE® SERIES

LENNOX QUANTUM™ COIL

ENERGY STAR

MODEL NUMBER IDENTIFICATION

EL 15 K C 1 - 036 - 230 A 01

Product Tier
EL = Elite® Series

Nominal SEER2
15 = 15.0

Refrigerant Type
K = R-454B

Unit Type
C = Air Conditioner (Condenser)

Cooling Stages
1 = Single Stage Compressor

Regional Standards
– (dash) = North Region

Nominal Cooling Capacity
018 = 1.5 tons
024 = 2 tons
030 = 2.5 tons
036 = 3 tons
042 = 3.5 tons
048 = 4 tons
060 = 5 tons

Voltage
230 = 208/230V-1 phase-60Hz

Ratings Revision Level

Revision Level

Form Number 211053 | April 2026
Supersedes all previous versions

FEATURE HIGHLIGHTS

1. Outdoor Coil Fan
2. Quantum™ Coil
3. High Capacity Liquid Line Drier
4. High Pressure Switch
5. Scroll Compressor
6. Heavy Gauge Steel Cabinet
7. Louvered Coil Protection
8. Refrigerant Line Connections and Access

CONTENTS

Approvals And Warranty 3
Control Options 6
Dimensions - Unit 10
Expanded Sound Data 9
Features 3
Field Wiring 9
Installation Clearances 9
Optional Accessories - Order Separately 7
Specifications 7
TXV Substitution - R-454b 11
TXV Usage. 11

APPROVALS AND WARRANTY

APPROVALS

- AHRI Standard 210/240-2023 certified
- AHRI Certified system match-ups and expanded ratings, visit www.LennoxPros.com
- ENERGY STAR® Certified
- Sound rated to AHRI Standard 270-2008 test conditions
- Tested in Lennox' Research Laboratory environmental test room
- Rated According to U.S. Department of Energy (DOE) test procedures
- Region specific models meet the minimum efficiency requirements for U.S. DOE Federal Regional Standards in that area
- Unit and components ETL, NEC and CEC bonded for grounding to meet safety standards for servicing
- ETL certified (U.S. and Canada)
- ISO 9001 Registered Manufacturing Quality System

WARRANTY

- Compressor:
  - Limited ten years in residential installations
  - Limited five years in non-residential installations
- All other covered components:
  - Limited five years in residential installations
  - Limited one year in non-residential installations

NOTE - Refer to Lennox® Basic Limited Warranty at www.Lennox.com for additional details.

FEATURES

APPLICATIONS

- 1.5 through 5 tons
- Sound levels as low as 71 dBA
- Single-phase power supply
- Vertical air discharge
- Applicable to indoor air handlers or gas furnaces with indoor add-on coils
- Suitable for coastal areas
- Factory test operated
- Shipped completely factory assembled, piped and wired

REFRIGERATION SYSTEM

R-454B Refrigerant

- Low GWP (Global Warming Potential)
- Zero ODP (Ozone Depletion Potential)
- Low Toxicity/Lower Flammability - A2L
- Unit is factory pre-charged

NOTE - Total system refrigerant charge is dependent on outdoor unit size, indoor unit size and refrigerant line length.

NOTE - Refer to the unit-mounted charging sticker to determine correct amount of charge required.

1 Outdoor Coil Fan

- Direct drive fan
- Vertical air discharge
- Totally enclosed fan motor
- Sleeve bearings
- Inherently protected
- PVC (polyvinyl chloride) coated steel fan guard

2 Quantum™ Coil

- Lennox designed and fabricated coil
- Enhanced aluminum alloy tube/enhanced fin coil
- Superior corrosion resistance
- Ripple-edged aluminum fins
- Aluminum tube construction
- Lanced fins for maximum fin surface exposure
- Fin collars grip tubing for maximum contact area
- Flared shoulder tubing connections
- Factory tested under high pressure
- Entire coil is accessible for cleaning

3 High Capacity Liquid Line Drier

- Factory installed in the liquid line
- Drier traps moisture or dirt that could contaminate the system
- 100% molecular-sieve, bead type, bi-flow drier

4 High Pressure Switch

- Protects the system from high pressure conditions that can be a result of fan failure or a blocked/dirty coil
- Automatic reset

Low Pressure Switch

- Protects the compressor from low pressure conditions such as low refrigerant charge, or low/no indoor airflow
- Shuts off the outdoor unit if suction pressure falls below setting
- Automatic reset

REFRIGERATION SYSTEM (Continued)

Optional Accessories

Expansion Valve Kits
- Field installed on indoor units (if required)
- See TXV Usage table
- Chatleff-style fitting

Freezestat
- Protects the system from ice buildup on the indoor coil due to conditions such as low/no airflow, or low refrigerant charge
- Cycles compressor off when suction line temperature falls below freezestat setpoint
- Opens at 29°F and closes at 58°F
- Installs on or near the discharge line of the evaporator or on the suction line

Refrigerant Line Kits
- Refrigerant lines are shipped refrigeration clean
- Lines are cleaned, dried, pressurized and sealed at factory
- Suction line fully insulated
- Lines are stubbed at both ends

INDOOR REFRIGERANT DETECTION SYSTEM (RDS)

- Complies with UL 60335-2-40 approved standard
- Required for all systems using R-454B refrigerant
- Factory or field installed on all indoor units
- Consists of a RDS refrigerant detection sensor and a mitigation control in the indoor unit
- Ensures safe operation for systems equipped with R-454B refrigerant
- Indoor sensor will detect any R-454B refrigerant
- If R-454B refrigerant is detected, the refrigerant detection system will stop compressor operation and operate the blower to reduce concentrations in the conditioned space
- Once safe levels are reached the HVAC system will resume normal operation
- Refer to indoor unit Product Specifications documents for additional details

COMPRESSOR

5 Single-Stage Scroll Compressor
- High volumetric efficiency
- Uniform suction flow
- Constant discharge flow
- High efficiency
- Quiet operation
- Low gas pulses during compression reduces operational sound levels
- Compressor motor is internally protected from excessive current and temperature
- Muffler in discharge line reduces operating sound levels
- Compressor is installed in the unit on resilient rubber mounts for vibration free operation

Compressor Crankcase Heater (048, 060 Models)
- Prevents migration of liquid refrigerant into compressor and ensures proper compressor lubrication

Compressor Sound Dampening System
- Polyethylene compressor
- 2 inch thick batt fiberglass insulation
- All open edges sealed with one-inch wide hook and loop fastening tape

Optional Accessories

Compressor Crankcase Heater (018 thru 042 models)
- Prevents migration of liquid refrigerant into compressor and ensures proper compressor lubrication

Compressor Hard Start Kit
- Single-phase units are equipped with a PSC compressor motor
- This type of motor normally does not need a potential relay and start capacitor
- For conditions such as low voltage kit, may be required to increase the compressor starting torque

Compressor Low Ambient Cut-Off Switch
- Non-adjustable switch (low ambient cut-out)
- Prevents compressor operation when outdoor temperature is below 35°F

Compressor Timed-Off Control
- Prevents compressor short-cycling
- Allows time for suction and discharge pressure to equalize
- Permits compressor start-up in an unloaded condition
- Automatic reset with 5 minute delay between compressor shut-off and start-up

FEATURES

CABINET

6
- Heavy-gauge steel construction
- Pre-painted powder paint cabinet finish
- Tested to the International Cyclic Salt Fog/UV Exposure Standard, ASTM D5894, for excellent corrosion protection
- Louvered heavy gauge steel panels surround unit on all four sides
- Control box is conveniently located with all controls factory wired
- Corner patch plate allows access to compressor components
- Drainage holes are provided in base section for moisture removal
- High density polyethylene unit support feet raise the unit off of the mounting surface, away from damaging moisture

Zinc-Coated Steel Unit Base
- Resists rust and corrosion

7 Louvered Coil Protection
- Steel louvered panels provides complete coil protection
- Panels are hinged to allow easy cleaning and servicing of coils
- Panels may be completely removed
- Interlocking tabs and slots assure tight fit on cabinet

8 Refrigerant Line Connections, Electrical Inlets and Service Valves
- Sweat connection suction and liquid lines
- Located on corner of unit cabinet
- Suction valve can be fully shut off, while liquid valve may be front seated to manage refrigerant charge while servicing system
- Refrigerant line connections and field wiring inlets are located in one central area of the cabinet
- See dimension drawing

Braze-Free/Press Fitting Flexibility
- Units can accommodate braze-free or press fittings for installation versatility

CONTROLS

Optional Accessories

Thermostat
- Thermostat is not furnished with unit
- See page 6

Low Ambient Kit
- Air conditioners can operate down to 45°F outdoor air temperature without additional controls
- Allows unit to operate properly down to 30°F

NOTE - Crankcase heater and freezestat should be installed on compressors equipped with a low ambient kit.

NOTE - A compressor lock-out thermostat should be added to terminate compressor operation below recommended operation conditions.

CONTROL OPTIONS

E40 Smart Wi-Fi Thermostat

- 3 Htg.-2 Clg.
- 7-day, universal, programmable, touchscreen thermostat
- Controls dehumidification during cooling mode and humidification during heating mode
- Smooth Setback Recovery and compressor short-cycle protection
- One-Touch Away Mode, Smart Away™ (geo-fencing), equipment maintenance reminders and scheduling
- Smart home automation compatible with Amazon Alexa®, Google Assistant, Control4®, Building36®, Matter and IFTTT
- Lennox® Home App controls temperature, fan operation, set programs/schedules and set Away mode on a smartphone
- Lennox Smart Tech App allows the installer to commission the system and remotely turn the system on and off during setup or service call on a smartphone

L40 Smart Wi-Fi Thermostat

- 2 Htg.-1 Clg.
- 7-day, universal, programmable, touchscreen thermostat
- Provides temperature control for gas, electric and heat pumps for single-stage heating or cooling systems (including dual-fuel operation)
- One-Touch Away Mode, Smart Away™ (geo-fencing), equipment maintenance reminders and scheduling
- Smooth Setback Recovery and compressor short-cycle protection
- Smart home automation compatible with Amazon Alexa®, Google Assistant, Control4®, Building36®, Matter and IFTTT
- Lennox® Home App controls temperature, fan operation, set programs/schedules and set Away mode on a smartphone
- Lennox Smart Tech App allows the installer to commission the system and remotely turn the system on and off during setup or service call on a smartphone

M40 Smart Wi-Fi Thermostat

- 3 Htg.-2 Clg.
- 7-day, universal, programmable, touchscreen thermostat
- Smooth Setback Recovery and compressor short-cycle protection
- One-Touch Away Mode, Smart Away™ (geo-fencing), equipment maintenance reminders and scheduling
- Smart home automation compatible with Amazon Alexa®, Google Assistant, Control4®, Building36®, Matter and IFTTT
- Lennox® Home App controls temperature, fan operation, set programs/schedules and set Away mode on a smartphone
- Lennox Smart Tech App allows the installer to commission the system and remotely turn the system on and off during setup or service call on a smartphone

NOTE - Please refer to the individual Product Specifications for these products for full information.

CONTROLS - ORDERING

E40 Smart Wi-Fi Thermostat	3-3/8 x 5-3/8 x 1	**30L26**
Lennox® Smart Room Sensor	4 x 5-1/2 x 3	**22V25**
Lennox® Smart Air Quality Monitor	3-5/8 x 4-3/8 x 1-3/8	**21P02**
Lennox® Wireless Extender	4 x 5-1/2 x 2-1/2	**22V26**
L40 Smart Wi-Fi Thermostat	2-13/16 x 2-13/16 x 1/4	**27V51**
M40 Smart Wi-Fi Thermostat	3-5/16 x 4-5/16 x 7/8	**30L27**
Thermostat Accessories		
[1] Discharge Air Temperature Sensor (For E40)		**88K38**
[2] Remote Outdoor Air Temperature Sensor (For dual-fuel and Humiditrol®)		**X2658**

[1] Optional for service diagnostics (E40).

[2] Remote Outdoor Air Temperature Sensor is used with conventional (non-Lennox® Communicating) outdoor units (sensor is furnished with Lennox® Communicating outdoor units). Allows the thermostat to display outdoor temperature. Required in dual-fuel and Humiditrol® applications.

SPECIFICATIONS — NORTH REGION

Size		018	024	030	036
Nominal Tonnage		1.5	2	2.5	3
Sound Rating Number	dBA	72	72	71	74
Connections (Sweat)	Liquid line (OD) - in.	3/8	3/8	3/8	3/8
	Suction line (OD) - in.	3/4	3/4	3/4	7/8
Compressor Type		1-Stage Scroll	1-Stage Scroll	1-Stage Scroll	1-Stage Scroll
Refrigerant (15 ft. Line Set)	[1] R-454B charge furnished	4 lbs. 0 oz.	4 lbs. 7 oz.	4 lbs. 14 oz.	5 lbs. 10 oz.
Refrigerant (30 ft. Line Set)	[1] R-454B charge furnished	4 lbs. 9 oz.	5 lbs. 0 oz.	5 lbs. 7 oz.	6 lbs. 3 oz.
Indoor Unit Expansion Valve (TXV)		**26Z70**	**26Z70**	**26Z70**	**26Z70**
Outdoor Coil	Net face area - ft.²	11.33	13.22	16.33	18.67
	Tube diameter - in.	5/16	5/16	5/16	5/16
	Rows	1	1	1	1
	Fins - in.	26	26	26	26
Outdoor Fan	HP	1/10	1/10	1/6	1/6
	Diameter - in.	18	18	22	22
	Blades	3	3	3	3
	Cfm	2290	2350	2610	2800
	Rpm	1075	1075	825	825
	Watts	150	155	160	190
Shipping Data - lbs.		150	155	171	210

ELECTRICAL DATA

	Line voltage data (Volts-Phase-Hz)	208/230-1-60	208/230-1-60	208/230-1-60	208/230-1-60
	[2] Maximum overcurrent protection (MOCP) amps	15	20	25	30
	[3] Minimum circuit ampacity (MCA)	11.1	13.5	16.6	17.8
Compressor	Rated load amps	8.3	10.2	12.5	13.4
	Locked rotor amps	45	60.2	67.8	82.5
Fan Motor	Full load amps	0.7	0.7	1.0	1.0
	Locked rotor amps	1.3	1.3	1.9	1.9

OPTIONAL ACCESSORIES - ORDER SEPARATELY

Compressor Crankcase Heater	Copeland	**27V63**	•	•	•	•
	LG	**27U16**	•	•	•	•
Compressor Hard Start Kit	Copeland	**63W22**	•			
		10J42		•	•	•
	LG	**10J42**	•	•	•	•
Compressor Low Ambient Cut-Off Switch		**45F08**	•	•	•	•
Compressor Timed-Off Control		**47J27**	•	•	•	•
Freezestat	3/8 in.	**93G35**	•	•	•	•
[4] Low Ambient Kit (Fan Cycling)		**34M72**	•	•	•	•
Refrigerant Line Sets Liquid x Suction OD | Insulation Thickness | Length	3/8 x 3/4 | 3/8 | 20 ft.	**89J56**	•	•	•	
	3/8 x 3/4 | 3/8 | 30 ft.	**89J57**				
	3/8 x 3/4 | 3/8 | 50 ft.	**89J59**				
	3/8 x 7/8 | 3/8 | 30 ft.	**89J60**				•
	3/8 x 7/8 | 3/8 | 50 ft.	**89J62**				

NOTE - Extremes of operating range are plus 10% and minus 5% of line voltage.

[1] Refrigerant charge sufficient for the line set length listed in parenthesis. For longer line set requirements see the Installation Instructions or unit Charging Label for information about line set length and additional refrigerant charge required.

[2] HACR type breaker or fuse.

[3] Refer to National or Canadian Electrical Code manual to determine wire, fuse and disconnect size requirements.

[4] Crankcase Heater and Freezestat are recommended with Low Ambient Kit.

SPECIFICATIONS — NORTH REGION

Size		042	048	060
Nominal Tonnage		3.5	4	5
Sound Rating Number	dBA	72	77	73
Connections (Sweat)	Liquid line (OD) - in.	3/8	3/8	3/8
	Suction line (OD) - in.	7/8	7/8	1-1/8
Compressor Type		1-Stage Scroll	1-Stage Scroll	1-Stage Scroll
Refrigerant (15 ft. Line Set)	[1] R-454B charge furnished	6 lbs. 2 oz.	7 lbs. 10 oz.	8 lbs. 8 oz.
Refrigerant (30 ft. Line Set)	[1] R-454B charge furnished	6 lbs. 11 oz.	8 lbs. 3 oz.	9 lbs. 1 oz.
Indoor Unit Expansion Valve (TXV)		**26Z71**	**26Z71**	**26Z72**
Outdoor Coil	Net face area - ft.² Outer coil	21.00	16.33	21.00
	Inner coil	- - -	15.75	20.25
	Tube diameter - in.	5/16	5/16	5/16
	Rows	1	2	2
	Fins - in.	26	22	22
Outdoor Fan	HP	1/3	1/4	1/4
	Diameter - in.	22	22	22
	Blades	3	3	4
	Cfm	2985	2875	3250
	Rpm	825	825	845
	Watts	150	160	280
Shipping Data - lbs.		212	230	250

ELECTRICAL DATA

	Line voltage data (Volts-Phase-Hz)	208/230-1-60	208/230-1-60	208/230-1-60
	[2] Maximum overcurrent protection (MOCP) amps	35	40	50
	[3] Minimum circuit ampacity (MCA)	21.2	24.3	31.3
Compressor	Rated load amps	14.9	18.0	23.7
	Locked rotor amps	109	126	157
Fan Motor	Full load amps	2.6	1.7	1.7
	Locked rotor amps	- - -	3.2	3.2

OPTIONAL ACCESSORIES - ORDER SEPARATELY

Compressor Crankcase Heater	Copeland	**27P59**	•	Factory	Factory
	LG	**27U16**	•	Factory	Factory
Compressor Hard Start Kit	Copeland	**10J42**	•	•	•
	LG	**10J42**	•		
		88M91		•	•
Compressor Low Ambient Cut-Off Switch		**45F08**	•	•	•
Compressor Timed-Off Control		**47J27**	•	•	•
Freezestat	3/8 in.	**93G35**	•	•	•
[4] Low Ambient Kit (Fan Cycling)		**34M72**	•	•	•
Refrigerant Line Sets	3/8 x 7/8 | 3/8 | 30 ft.	**89J60**	•	•	
	3/8 x 7/8 | 3/8 | 50 ft.	**89J62**			
Liquid x Suction OD | Insulation Thickness | Length	3/8 x 1-1/8 | 3/8 | 50 ft.	**73P91**			•

NOTE - Extremes of operating range are plus 10% and minus 5% of line voltage.

[1] Refrigerant charge sufficient for the line set length listed in parenthesis. For longer line set requirements see the Installation Instructions or unit Charging Label for information about line set length and additional refrigerant charge required.

[2] HACR type breaker or fuse.

[3] Refer to National or Canadian Electrical Code manual to determine wire, fuse and disconnect size requirements.

[4] Crankcase Heater and Freezestat are recommended with Low Ambient Kit.

EXPANDED SOUND DATA

Size	Octave Band Sound Power Levels dBA, re 10^{-12} Watts Center Frequency - Hz							[1] Sound Rating Number (dBA)	[2] Estimated Sound Pressure Level at Distance From Unit (dBA at distance in ft.)				
	125	250	500	1000	2000	4000	8000		3	5	10	15	50
018	55	61	67	68	63.5	59	50.5	72	65	60	54	51	40
024	55	62	67.5	66.5	63	59	52.5	72	65	60	54	51	40
030	54	61.5	66	66	62	57	51	71	64	59	53	50	39
036	54.5	60.5	67.5	69.5	67	61.5	60	74	67	62	55	52	41
042	55.5	62.5	68	67	62	57.5	51.5	72	65	60	54	51	40
048	61.5	63.5	71	74.5	67	61.5	59.5	77	70	64	58	55	43
060	55.5	62.5	67	66.5	62.5	60	53.5	73	66	61	55	52	41

NOTE - The octave sound power data does not include tonal correction.

[1] Tested according to AHRI Standard 270-2008 test conditions.

[2] Estimated sound pressure level at distance based on AHRI Standard 275-2010 method for equipment located on the ground, roof, or on side of building wall with no adjacent reflective surface within 9.8 feet. Sound pressure levels will increase based on changes to assumptions. For other applications, refer to AHRI Standard 275.

FIELD WIRING

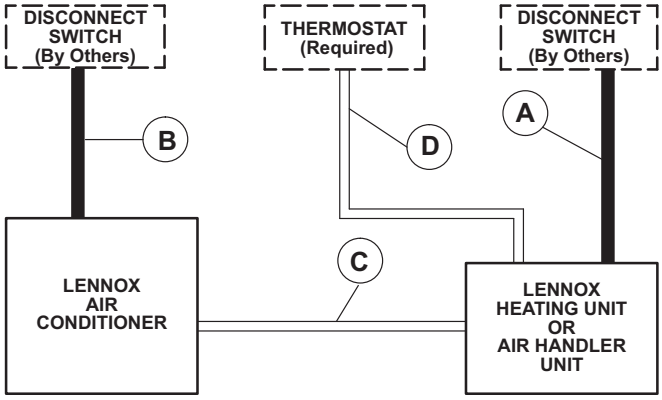

A - Two Wire Power (not furnished)
B - Two Power (not furnished). See Electrical Data
C - Four Wire Low Voltage (not furnished). 18 ga. minimum
D - Five Wire Low Voltage (not furnished). 18 ga. minimum
All wiring must conform to NEC or CEC and local electrical codes.

INSTALLATION CLEARANCES

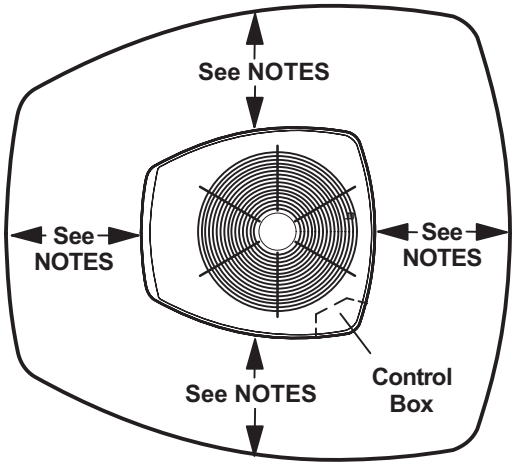

NOTES:

- Service Clearance – 30 in. (762 mm) on one of the sides adjacent to the Control Box.
- One of other three sides must be 36 in. (914 mm).
- One of the two remaining sides may be 12 in. (305 mm).
- The remaining side may be 6 in. (152 mm).
- 48 in. (1219 mm) clearance required on top of unit
- 24 in. (610 mm) required between two units

DIMENSIONS - UNIT

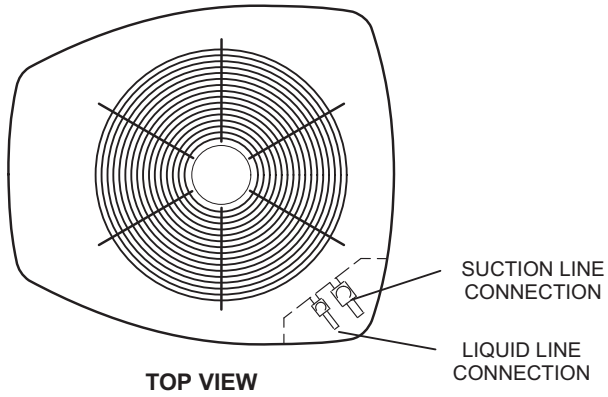

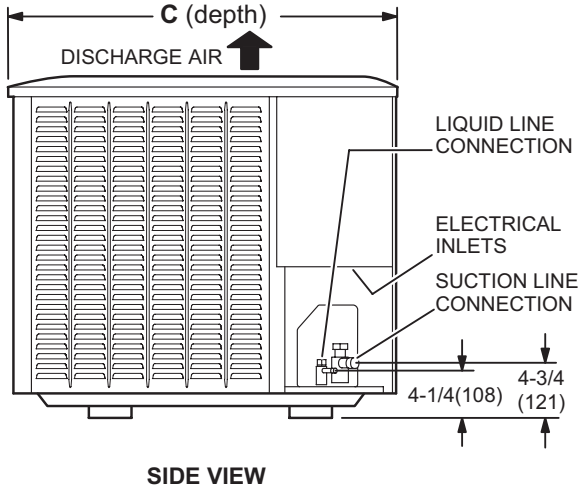

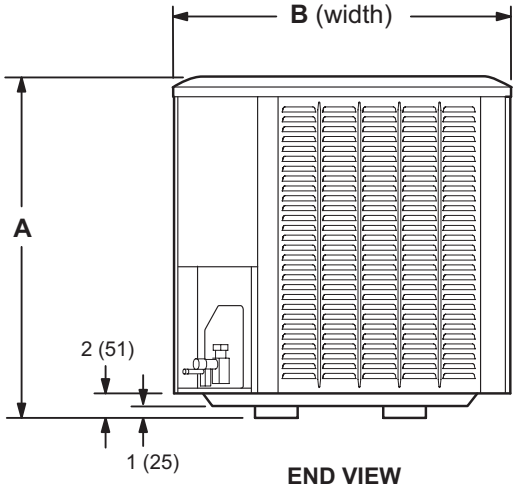

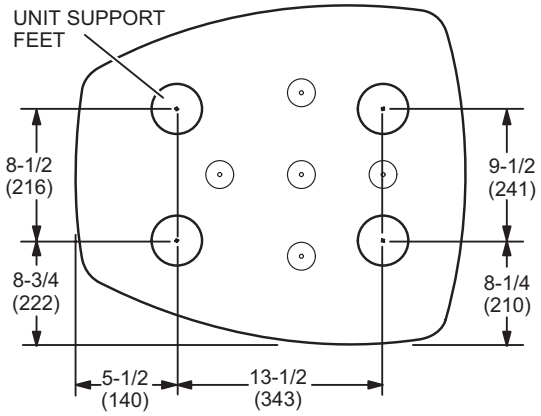

EL15KC1-018 AND -024 BASE SECTION (Small Base)

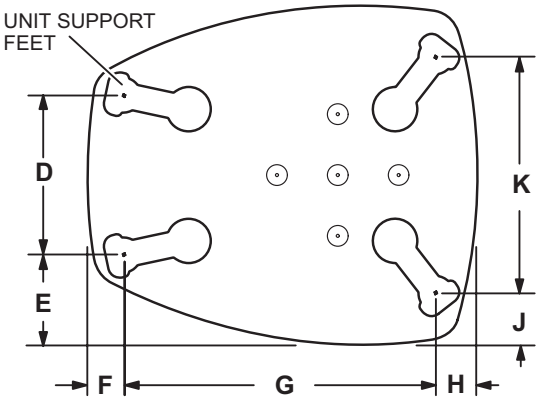

EL15KC1-030 TO -060 BASE SECTION (Medium Base)

Size	A (Height)		B (Width)		C (Depth)		D		E		F		G		H		J		K	
	in.	mm	in.	mm	in.	mm	in.	mm	in.	mm	in.	mm	in.	mm	in.	mm	in.	mm	in.	mm
018	27	686	27	686	28	711	See EL15KC1-018 and EL15KC1-024 base section above													
024	31	787	27	686	28	711														
030	31	787	30-1/2	775	35	889	13-7/8	352	7-3/4	197	3-1/4	83	27-1/8	689	3-5/8	92	4-1/2	114	20-5/8	524
036	35	889	30-1/2	775	35	889	13-7/8	352	7-3/4	197	3-1/4	83	27-1/8	689	3-5/8	92	4-1/2	114	20-5/8	524
042	39	991	30-1/2	775	35	889	13-7/8	352	7-3/4	197	3-1/4	83	27-1/8	689	3-5/8	92	4-1/2	114	20-5/8	524
048	31	787	30-1/2	775	35	889	13-7/8	352	7-3/4	197	3-1/4	83	27-1/8	689	3-5/8	92	4-1/2	114	20-5/8	524
060	39	991	30-1/2	775	35	889	13-7/8	352	7-3/4	197	3-1/4	83	27-1/8	689	3-5/8	92	4-1/2	114	20-5/8	524

TXV USAGE

All Lennox coils and air handlers are shipped with a factory installed TXV. In most cases, no substitution is needed.
If a different size TXV is required, it will be listed in the "TXV SUBSTITUTION" table by size. The correct TXV must be ordered separately and field installed.

Size	Order Number
018	**26Z70**
024	**26Z70**
030	**26Z70**
036	**26Z70**
042	**26Z71**
048	**26Z71**
060	**26Z72**

AHRI STANDARD 210-240-2023

Standard Ratings relating to cooling or heating capacities shall be net values, including the effects of circulating-fan heat, but not including supplementary electric heat. Power input used for calculating efficiency shall be the Total Power.

Standard Ratings of units which do not have indoor air-circulating fans furnished as part of the model, i.e., Coil-only System, shall be established by subtracting from the total cooling capacity 1,505 Btu/h per 1,000 SCFM, and by adding the same amount to the heating capacity for non-mobile-home, non-Space Constrained units. Total Power for both heating and cooling shall be increased by 441 W per 1,000 SCFM of indoor air circulated.

TXV SUBSTITUTION - R-454B

A general guide for replacing the factory installed R-454B TXV if the indoor unit (coil/air handler) is larger or smaller than the outdoor unit.

Outdoor Unit		Indoor Unit		Indoor TXV Furnished	Indoor TXV Replacement
Size	Tons	Size	Tons		
018	1.5	42	3.5	**26Z71**	**26Z70**
018	1.5	48	4	**26Z71**	**26Z70**
018	1.5	49	4	**26Z71**	**26Z70**
018	1.5	50/60	4/5	**26Z71**	**26Z70**
018	1.5	51/61	4/5	**26Z71**	**26Z70**
018	1.5	60	5	**26Z72**	**26Z70**
024	2	42	3.5	**26Z71**	**26Z70**
024	2	48	4	**26Z71**	**26Z70**
024	2	49	4	**26Z71**	**26Z70**
024	2	50/60	4/5	**26Z71**	**26Z70**
024	2	51/61	4/5	**26Z71**	**26Z70**
024	2	60	5	**26Z72**	**26Z70**
030	2.5	42	3.5	**26Z71**	**26Z70**
030	2.5	48	4	**26Z71**	**26Z70**
030	2.5	49	4	**26Z71**	**26Z70**
030	2.5	50/60	4/5	**26Z71**	**26Z70**
030	2.5	51/61	4/5	**26Z71**	**26Z70**
030	2.5	60	5	**26Z72**	**26Z70**
036	3	42	3.5	**26Z71**	**26Z70**
036	3	48	4	**26Z71**	**26Z70**
036	3	49	4	**26Z71**	**26Z70**
036	3	50/60	4/5	**26Z71**	**26Z70**
036	3	51/61	4/5	**26Z71**	**26Z70**
036	3	60	5	**26Z72**	**26Z70**
042	3.5	24	2	**26Z70**	**26Z71**
042	3.5	30	2.5	**26Z70**	**26Z71**
042	3.5	30/36	2.5/3	**26Z70**	**26Z71**
042	3.5	36	3	**26Z70**	**26Z71**
042	3.5	60	5	**26Z72**	**26Z71**
048	4	30/36	2.5/3	**26Z70**	**26Z71**
048	4	36	3	**26Z70**	**26Z71**
048	4	60	5	**26Z72**	**26Z71**
060	5	50/60	4/5	**26Z71**	**26Z72**
060	5	51/61	4/5	**26Z71**	**26Z72**

TXV Ranges:

26Z70 - 1.5 to 3 ton systems - Use on 3 ton (036) and lower systems.

26Z71 - 3.5-4 ton systems - Use on 4 ton (048) and down to 3.5 ton (042) systems.

26Z72 - 5 ton systems - Use on 5 ton (060) systems only.

REVISIONS

Sections	Description of Change
Control Options	Updated to reflect latest product offering.

Visit us at www.Lennox.com
For the latest technical information, www.LennoxPros.com
Contact us at 1-800-4-LENNOX

NOTE - Due to Lennox' ongoing commitment to quality, Specifications, Ratings and Dimensions subject to change without notice and without incurring liability.
Improper installation, adjustment, alteration, service or maintenance can cause property damage or personal injury.
Installation and service must be performed by a qualified installer and servicing agency.

©2026 Lennox Industries, Inc.