GAS FURNACES

ML193UHE

MERIT® SERIES

Upflow / Horizontal - Constant Torque Blower - 60Hz

RESIDENTIAL PRODUCT SPECIFICATIONS

Bulletin No. 210867
July 2026
Supersedes all previous versions

MERIT® SERIES

AFUE - 93%
Input - 30,000 to 110,000 Btuh
Nominal Add-on Cooling - 3 to 5 Tons

MODEL NUMBER IDENTIFICATION

ML 1 93 UH 070 X E 36 B

Unit Type
ML = Merit® Series

Stages
1 = One-Stage

AFUE
93 = 93%

Configuration
UH = Upflow/Horizontal

Nominal Gas Heat Input
030 = 30,000 Btuh
045 = 44,000 Btuh
070 = 66,000 Btuh
090 = 88,000 Btuh
110 = 110,000 Btuh

Low NO_x
X = Units meet California Nitrogen Oxides Standard (40 ng/J)

Blower
E = High Efficiency Constant Torque Blower Motor

Nominal Add-On Cooling Capacity
36 = 1.5 - 3 tons
48 = 2.5 - 4 tons
60 = 3 - 5 tons

[1] **Cabinet Width**
B = 17-1/2 in.
C = 21 in.

[1] Indoor coils with the same letter designation will physically match the furnace.

FEATURE HIGHLIGHTS

1. Lennox Duralok Plus™ Heat Exchanger
2. Secondary Heat Exchanger
3. Inshot Burners
4. Gas Control Valve
5. Flame Rollout Switch
6. Combustion Air Inducer
7. SureLight® Integrated Furnace Control
8. Power Saver™ Constant Torque Blower
9. Insulated Cabinet
10. Safety Interlock Switch
11. Gas Piping And Electrical Inlets

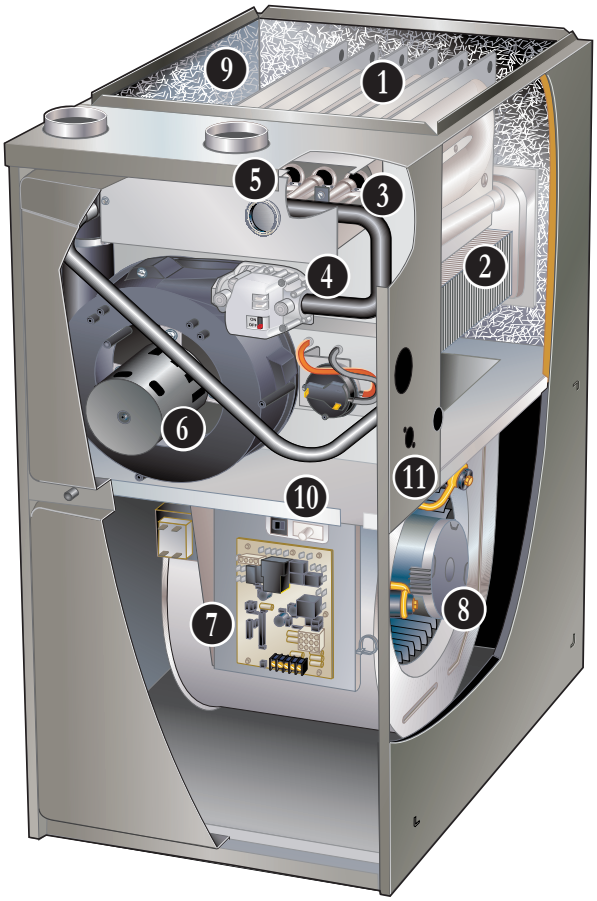

CONTENTS

Blower Data 21
Approvals And Warranty 3
Dimensions 14
- Furnace/Coil Combined Dimensions 20
- Optional Accessories 16
- Optional Accessories - Venting. 17
- Unit - Horizontal Position 15
- Unit - Upflow Position 14
Features 3
Gas Heat Accessories 10
High Altitude Derate 10
Installation Clearances 10
Model Number Identification. 1
Optional Accessories 11
Specifications 9
Vent Lengths 13

APPROVALS AND WARRANTY

APPROVALS

- AHRI Certified
- Tested and rated according to US DOE test procedures and FTC labeling regulations
- ISO 9001 Registered Manufacturing Quality System
- Blower data from unit tests conducted in Lennox Laboratory air test chamber

NOTE - This furnace has not been CSA International design certified for installation in mobile homes, recreational vehicles, or outdoors.

California Only

- These furnaces **do not meet** the South Coast Air Quality Management District (SCAQMD) Rule 1111 and San Joaquin Valley Air Pollution Control District (SJVAPCD) Rule 4905 NOx emission limit (14 ng/J) and cannot be installed within the SCAQMD, SJVAPCD and Bay Area
- These furnaces are approved by the California Energy Commission and meets California Nitrogen Oxides Standard (NOx) limits of 40 ng/J

WARRANTY

- Duralok Plus™ Aluminized Steel Heat Exchanger:
  - Limited twenty year in residential applications
  - Limited ten years in non-residential applications
- All other covered components:
  - Limited five years in residential installations
  - Limited one year in non-residential installations

NOTE - Refer to Lennox® Basic Limited Warranty at www.Lennox.com for additional details.

FEATURES

APPLICATIONS

- Input capacities of 30,000, 44,000, 66,000, 88,000 and 110,000 Btuh
- Energy efficiency (AFUE) - 93%
- Compact cabinet for upflow, horizontal-left or horizontal-right applications without any modifications
- Lennox add-on indoor coils, high-efficiency air cleaners and humidifiers can easily be added to furnace
- Shipped factory assembled with all controls installed and wired
- Factory test operated to ensure proper operation.

HEATING SYSTEM

1 Lennox Duralok Plus™ Heat Exchanger Assembly

- Lennox developed heat exchanger assembly consists of primary heat exchanger and secondary condenser coil assembly
- Main multi-pass crimped seam design clamshell type
- Constructed of heavy-gauge, aluminized steel
- Designed for normal expansion and contraction with maximum efficiency and minimum resistance to air flow

2

- Secondary heat exchanger condenser coil constructed of aluminum fins fitted to stainless steel tubes
- Coil is factory tested for leaks
- Condensate drain header box assembly located on front of coil
- Compact size permits low overall design of furnace cabinet
- Laboratory life cycle tested in excess of industry standards

Lennox Designed Header Box

- Header box on end of condenser coil collects flue condensate for disposal through condensate drains
- Drains are located on each side of the cabinet for easy field installation of condensate drain trap
- Only one drain is used, the other drain is sealed
- Condensate drain trap is included with the unit for field installation

HEATING SYSTEM (continued)

Lennox Designed Flue Condensate Trap Assembly
- Field installed outside the conditioned air stream
- Assembly can be mounted on either side of cabinet in upflow applications
- Assembly is mounted below the cabinet in horizontal applications
- Can also be mounted remotely (up to 5 ft. away) from unit
- See Dimension Drawing and Installation Instructions
- 90° street elbow furnished for ease of drain trap installation
- Drain connection can be made with field provided PVC pipe or PVC coupling
- Drain cap on trap allows easy cleaning and winterizing

3 Inshot Burners
- Aluminized steel inshot burners provide efficient, trouble-free operation
- Burner venturi mixes air and gas in correct proportion for proper combustion
- Burner assembly can be removed from the unit as a single component for ease of service

SureLight® Hot Surface Ignitor
- Tough, reliable, long-life, trouble-free performance
- Silicon nitride ignitor
- Cemented to steatite block for protection against current leakage
- Ignition leads are constructed of nickel plated copper and are enclosed in high temperature Teflon® insulation for dependable operation

4 Gas Control Valve
- 24 volt redundant combination gas control valve combines manual shut off switch (On-Off), automatic electric valve (dual) and gas pressure regulation into a compact combination control

5 Flame Rollout Switches (2)
- Factory installed on the front of the burner box
- Switch provides protection from abnormal operating conditions
- Manual reset

Limit Control
- Primary limit is accurately located on header box on all units
- Automatic reset

6 Combustion Air Inducer
- Shaded pole heavy duty blower prepurges heat exchanger and safely vents flue products
- Operates only during heating cycle

Pressure Switch
- Proves Combustion Air Inducer operation before allowing gas valve to open

Optional Accessories

High Altitude Orifice Kits
- Required on all units for proper operation at altitudes from 7501 to 10,000 ft.
- Kits are available for natural gas and LPG/propane

High Altitude Pressure Switch Kit
- Required for proper unit operation on installations above 4500 ft.

Natural Gas to LPG/Propane Conversion Kit
- Required for field changeover from natural gas to LPG/Propane

LPG/Propane to Natural Gas Conversion Kit
- Required for field changeover from LPG/Propane to natural gas

Muffler (US Only)
- Significantly reduces outdoor operating sound levels
- Two-inch diameter muffler is optional for 030 through 110 input models

NOTE - Two-inch muffler is optional for the 110 input model with a maximum vent pipe length of up to 29 ft.
Three-inch diameter muffler is optional for 110 input model.

NOTE - Three-inch muffler is optional for the 110 input model with a minimum vent pipe length of 30 ft.

- Installed vertically in the exhaust piping
- See Optional Accessory Dimension Drawing

DIRECT VENT / NON-DIRECT VENT SEALED COMBUSTION SYSTEM

- Furnace features a “sealed combustion” system and can be installed in either Direct Vent or Non-Direct applications
- In Direct Vent applications, combustion air is supplied from outdoors and flue gases are discharged outdoors
- In Non-Direct Vent applications, combustion air is supplied from indoors and flue gases are discharged outdoors

NOTE - Lennox has approved the use of DuraVent® PolyPro® and Centrotherm InnoFlue® manufactured vent pipe and terminations as an alternative to PVC vent pipe. Must be ordered separately.
Tested and listed to the ULC S636 standard in Canada.

- The polypropylene venting system must follow the uninsulated and unconditioned space vent lengths listed in the table on 13
- Refer to the Installation Instructions for additional details

DIRECT VENT / NON-DIRECT VENT SEALED COMBUSTION SYSTEM (continued)

Flue Coupling
- Assists with exhaust flue piping connection and servicing
- Includes flexible one 2-inch rubber coupling and two adjustable bands
- Approved for all Lennox 90% furnaces

Vent Termination Kits
- Facilitates installation of combustion air intake pipe and flue exhaust pipe
- Refer to venting table in this bulletin to determine pipe size needed and proper termination kit required
- See Optional Accessories table and dimension drawings

Concentric Termination Kit - Direct Vent Applications
- 2 or 3 inch kit contains concentric termination assembly, reducer bushing and 45° elbow
- 2 inch kit for -030-045-070 models contains an outdoor exhaust accelerator
- Kit requires single hole penetration of roof or wall for installation
- Roof Termination Flashing Kit is available for use with 2 inch Kits
- CSA certified

Flush-Mount Termination Kit
- Kit contains flush-mount termination, accelerator, mounting template and hardware
- Kit may be used with 2, 2-1/2 or 3 in. pipe

Wall Assembly Termination Kits

Close Couple (US Only) - Direct Vent Applications
- 2 or 3 inch kit consists of close-couple, side-by-side PVC piping with galvanized steel wall cover plate
- Seals and isolates intake and exhaust piping penetration of wall
- Piping spacing and length is sized for proper wall installations
- CSA certified

Close Couple WTK (Canada Only) - Direct Vent Applications
- 2 or 3 inch kit contains one insulated faceplate, one insulated exhaust pipe, elbow and fittings

NOTE - Maintain a maximum of 6 inches between the inlet and outlet openings in the installation of the pipes.

Roof Termination Flashing Kit
- For vertical venting through a roof
- 2 or 3 inch kit contains two neoprene rubber roof flashings
- Vent pipe and insulation not furnished
- Flashing Kit can also be used with Concentric Vent Termination Kits used in vertical venting rooftop applications

CONTROLS

7 SureLight® Integrated Furnace Control
- Contains all necessary controls and relays to operate furnace
- Combustion air inducer is operated by the integrated furnace control
- Prior to ignition, a pre-purge cycle for 15 seconds is initiated
- After the main burners are turned off, a post-purge cycle for 5 seconds is run
- Flame sensor assures safe and reliable operation
- Should loss of flame occur, the integrated furnace control will initiate 4 re-attempts at ignition before locking out unit operation for 60 minutes
- Watchguard type circuit automatically resets ignition controls after one hour of continuous thermostat demand after unit lockout, eliminating nuisance calls for service
- Fan control consists of adjustable blower timed-off delay (60, 90, 120, 180 seconds - factory setting 90 seconds) and fixed blower timed-on delay (30 seconds heating, 2 seconds cooling)
- For air-conditioning applications, blower is automatically energized on thermostat demand for cooling
- Two accessory terminals furnished for additional power supply requirements for 120 volt (less than 1 amp) power humidifiers and powered air cleaners
- One additional terminal is furnished for power supply requirements for 24V (less than 0.5 amp) low voltage accessories
- Ignition control has a single red LED to indicate status and as an aid in troubleshooting
- Last ten codes are stored in non-volatile memory (accessible by recall button on control) for servicing

24 Volt Transformer (40VA)
- Furnished and factory installed on outside of control box
- Circuit breaker (furnished) is wired in series

Field Wiring Make-Up Box
- Furnished for line voltage wiring
- Factory installed internally on left side of furnace
- Box may be installed internally on right side of furnace

CONTROLS (continued)

Optional Accessories

M30 Smart Wi-Fi Thermostat

- Wi-Fi-enabled, electronic 7-day, universal, multi-stage, programmable, touchscreen thermostat
- 4 Heat/2 Cool
- Auto-changeover
- Dual-fuel control with optional outdoor sensor
- Controls dehumidification during cooling mode and humidification during heating mode

- Offers enhanced capabilities including humidification / dehumidification / dewpoint measurement and control, Humiditrol® control, and equipment maintenance reminders
- Easy to read 4.3 in. color touchscreen (measured diagonally)
- LCD display with backlight shows the current and set temperature, time, inside relative humidity, system status (operating mode and schedules) and outside temperature (optional outdoor sensor required)
- Smooth Setback Recovery starts system early to achieve setpoint at start of program period
- Compressor short-cycle protection (5 minutes)
- Up to four separate schedules are available plus Schedule IQ™
- One-Touch Away Mode - A quick and easy way to set the cooling and heating setpoints while away
- Smart Away™ - Uses geo-fencing technology to determine when the homeowner is within a predetermined distance from the home to operate the system when leaving, away and arriving
- Wi-Fi remote monitoring and adjustment through a home wireless network for desktop PCs, laptops and apps for smartphones or tablets
- Smart home automation compatible with Amazon Alexa®, Google Assistant and IFTTT
- Service Dashboard features online real-time monitoring of installed Lennox® thermostats

NOTE - See the Lennox® M30 Smart Wi-Fi Thermostat Product Specifications bulletin in the Controls section for more information.

Remote Outdoor Temperature Sensor

- Used with the Lennox® M30 Smart Thermostat
- Outdoor sensor allows thermostat to display outdoor temperature

NOTE - Sensor is required for the Enhanced Dehumidification Accessory (EDA).

Thermostat

- Thermostat is not furnished with unit
- See Lennox Price Book for selection

Blower Relay Kit (For Use With Two-Stage Outdoor Units)

- Allows furnace blower speed changes when matched with two-stage air conditioners or heat pumps

Furnace Twinning Panel

- Required to operate two identical furnaces simultaneously from a single thermostat
- For single stage conventional (1 heat/1 cool), multi-stage conventional (2 heat/2 cool) and heat pump (3 heat/2 cool) equipment
- Can be used with common or separate ducted systems
- Contains PC Control Board with terminal strip connections for thermostat and HVAC equipment
- LEDs indicate system operating status
- Uses standard 18-gauge thermostat wire
- Power Supply: 24 VAC, 40VA (transformer not furnished)
- Mounting base with hardware furnished
- Dimensions (H x W x D): 10 x 5 x 2 in.

NOTE - Only identical furnaces should be twinned in order to ensure that both furnace blowers start at the same time. If furnaces are not identical, back draft dampers can be installed in either the supply or return duct.

Up to four identical furnaces can be twinned. Requires two panels that are wired together.

Furnace Twinning Kit

- Required to operate two furnaces simultaneously
- Kit consists of twinning relays, quick connect terminals and mounting hardware
- Used for single-stage heating/single-stage cooling with a single-stage thermostat

Transformer (75VA)

- Recommended when furnace is used with zoning or defrost thermostats and other 24V accessories requiring a higher VA rating
- Circuit breaker (furnished) is wired in series
- Replaces the standard 40VA transformer

FEATURES

BLOWER

- Direct drive blower
- Statically and dynamically balanced
- Resiliently mounted
- Blower assembly easily removed for servicing

8 Power Saver™ Constant Torque Blower Motor

- DC Brushless Motor
- High Efficiency Constant Torque
- ECM (Electronically Commutated Motor)
- Motor is programmed to provide constant torque at each of the selectable speeds
- Motor is controlled by the Integrated Furnace Control
- Blower speeds are easily changed on the integrated furnace control
- See Blower Data tables

CABINET

- Low-profile, narrow width allows easy installation
- Heavy-gauge, cold rolled steel construction
- Pre-painted cabinet finish
- Flanges provided on supply air opening for ease of plenum connection or alignment with indoor coil
- 9 Insulated with foil faced insulation on sides and back of heating compartment
- Sealed blower compartment
- Complete service access
- 10 Safety interlock switch automatically shuts off power to unit when blower compartment access door is remove
- 11 Gas piping and electrical inlets are provided in both sides of cabinet

Low Leakage Cabinet

- All models have less than 2% air leakage
- Meets ANSI/ASHRAE Standard 193-2010 "Method of Test for Determining the Air Tightness of HVAC Equipment"

Bottom/Side Return Air Entry:

- Upflow/horizontal with bottom return air entry:
  - Remove furnished bottom seal panel from cabinet
- Upflow only with side return-air entry:
  - Corners are marked on either side of cabinet for return air cut-out
- See dimension drawings

NOTE - 60C size units that require air volumes over 1800 cfm must have one of the following:

- Single side return air and Optional Return Air Base with transition that must accommodate required 20 x 25 x 1 inch air filter to maintain proper velocity
- Bottom return air
- Return air from both sides
- Bottom and one side return air
- See Blower Performance Tables for additional information

Coil Match-Up

- All furnaces exactly match Lennox cased upflow indoor coils and horizontal indoor coils with same letter designation (A, B, C, D) in model number
- No adaptor required
- Engaging holes furnished on cabinet for alignment
- Lennox uncased coils match furnaces without any overhang but require an optional adaptor base or field fabricated transition to match furnace opening
- See coil bulletin for additional information

CABINET (continued)

Optional Accessories

Condensate Drain Heat Cable Kits
- Self-limiting wattage heat cable prevents condensate drain from freezing in unconditioned areas
- Available in 6 or 24 ft. lengths

Horizontal Suspension Kit
- Provides suspension of unit and indoor coil in horizontal applications
- Allows complete service access
- Consists of corner mounted hanging brackets with vibration isolators, return air end support rail and hardware for assembly
- Metal hanging straps must be field provided

Crawl Space Vent Drain Kit
- Allows venting through a crawl space for upflow and horizontal applications
- Includes 2 or 3 in. sanitary tee, 2 in. PVC assembly, PVC boot and clamp
- Kit for Canada is certified to ULC S636

Return Air Base
NOTE - On furnaces with side return air and condensate trap on the same side of the cabinet, a field fabricated transition or Return Air Base is required when using an IAQ product higher than 14-3/16 inches installed next to the unit and serviced from the front. IAQ products higher than 20 inches require a field fabricated transition.

NOTE - Must be used for 60C size models with air volumes over 1800 cfm in upflow applications when only one side return is required.
- Cabinet is shipped flat for easy field assembly
- Pre-painted steel to match the furnace
- See Dimension Drawing

High Performance Economizer
(Commercial Applications Only)
- Designed for applications requiring outdoor air to be utilized in a commercial HVAC system
- Allows the entry of fresh outdoor air for free cooling, reducing the requirement for mechanical cooling
- Heavy gauge galvanized steel cabinet lined with thick fiberglass insulation
- Mixed air sensor, outdoor air sensor and 24VAC transformer furnished
- Approved for California Title 24 building standards
- ASHRAE 90.1-2010 compliant
- See separate Product Specifications bulletin for additional information and available control and sensor options.

FILTER (not furnished)

- Filter and provisions for external mounting must be field provided

Optional Accessories

Air Filter and Rack Kit for Horizontal Return Air (End) Applications
- Washable or vacuum cleanable polyurethane frame type filter and external end return air rack
- Rack has filter door for servicing
- Flanges on rack for duct connection
- Field installed
- See dimension drawing

Air Filter and Rack Kit for Upflow Side Return Air
NOTE - Not for use with Return Air Base
- Washable or vacuum cleanable polyurethane frame type filter and external side return air rack available for field installation
- Available in single and ten pack kits
- Rack has filter door for servicing
- Flanges on rack for duct connection
- Field installs on either side of unit cabinet
- See dimension drawing

REFRIGERATION DETECTION SYSTEM (RDS)

Optional Accessories

Refrigerant Detection System (RDS) Coil Sensor Kit

- Complies with UL 60335-2-40 approved standard
- Required for field installation for all systems using R-454B refrigerant if sensor is not furnished with coil
- Consists of Refrigerant Detection System (RDS) sensor, lineset sleeves, mounting brackets and A2L labeling
- Sensor ensures safe operation for systems equipped with R-454B refrigerant
- Sensor will detect anu R-454B refrigerant

Refrigerant Detection System (RDS) Blower Control Board

Communicating Blower Control Board (Universal)

- Communicating Blower Control Board and Sensor can be used universally with any Lennox® communicating furnace or any non-communicating 24 volt furnace

Non-Communicating Blower Control Board

- Non-Communicating Blower Control Board and Sensor can be used with any non-communicating 24 volt furnace

Standard Features

- Complies with UL 60335-2-40 approved standard
- Required for all systems using R-454B refrigerant
- Connects to the RDS sensor furnished with the RDS Coil Sensor Kit
- Supports up to two RDS Sensors (factory setting)
- Used as an interface between indoor unit and thermostat to control system
- Ensures safe operation for systems equipped with R-454B refrigerant
- If R-454B refrigerant is detected, the refrigerant detection system will stop compressor and/or heating operating and operate the blower to reduce concentrations in the conditioned space
- Once safe levels are reached the HVAC system will resume normal operation
- Multi-color LED for system status and as an aid in troubleshooting
  - Flashing LED codes for system status (Green/Blue) and diagnosing Sensor errors (Red)
- Alarm relay can trigger an external alarm if R-454B refrigerant is detected
- Zone relay opens all zone dampers (if part of a zoning system) if R-454B refrigerant is detected
- Power is disabled to non-communicating thermostats to prevent demand if R-454B refrigerant is detected
- On system start-up blower will run for five minutes and any thermostat demands are disabled
- Dimensions (H x W x D): 7-7/16 x 7-7/16 x 2-1/2 (189 x 189 x 127 mm)

NOTE - See Refrigerant Detection System (RDS) Components Table on page 11.

See the CK40 Indoor Coil Product Specifications bulletins for more information.

Refer to the Installation Instructions for additional information.

SPECIFICATIONS

	Model No.	ML193UH030XE36B	ML193UH045XE36B	ML193UH070XE36B	ML193UH090XE36C
Gas Heating Performance	AHRI Reference No.	20256877	20256878	20256879	20256880
	[1] AFUE	93%	93%	93%	93%
	Input - Btuh	30,000	44,000	66,000	88,000
	Output - Btuh	29,000	42,000	63,000	84,000
	Temperature rise range - °F	25 - 55	30 - 60	40 - 70	50 - 80
	Gas Manifold Pressure (in. w.g.) Nat. Gas / LPG/Propane	3.5 / 10	3.5 / 10.0	3.5 / 10.0	3.5 / 10
	High static - in. w.g.	0.5	0.5	0.5	0.5
Connections in.	Intake / Exhaust Pipe (PVC)	2 / 2	2 / 2	2 / 2	2 / 2
	Gas pipe size IPS	1/2	1/2	1/2	1/2
	Condensate Drain Trap (PVC pipe) - i.d.	3/4	3/4	3/4	3/4
	with furnished 90° street elbow	3/4 slip x 3/4 Mipt	3/4 slip x 3/4 Mipt	3/4 slip x 3/4 Mipt	3/4 slip x 3/4 Mipt
	with field supplied (PVC coupling) - o.d.	3/4 slip x 3/4 MPT	3/4 slip x 3/4 MPT	3/4 slip x 3/4 MPT	3/4 slip x 3/4 MPT
Indoor Blower	Wheel nom. dia. x width - in.	10 x 8	10 x 8	10 x 8	10 x 8
	Motor Type	DC Brushless	DC Brushless	DC Brushless	DC Brushless
	Motor output - hp	1/2	1/2	1/2	1/2
	Tons of add-on cooling	1.5 - 3	1.5 - 3	1.5 - 3	1.5 - 3
	Air Volume Range - cfm	175 - 1435	355 - 1420	355 - 1430	405 - 1410
Electrical Data	Voltage	120 volts - 60 hertz - 1 phase			
	Blower motor full load amps	6.8	6.8	6.8	6.8
	Maximum overcurrent protection	15	15	15	15
Shipping Data	lbs. - 1 package	120	120	127	144

NOTE - Filters and provisions for mounting are not furnished and must be field provided.

[1] Annual Fuel Utilization Efficiency based on DOE test procedures and according to FTC labeling regulations. Isolated combustion system rating for non-weatherized furnaces.

SPECIFICATIONS

	Model No.	ML193UH090XE48C	ML193UH110XE48C	ML193UH110XE60C
Gas Heating Performance	AHRI Reference No.	20256881	20256882	20256883
	[1] AFUE	93%	93%	93%
	Input - Btuh	88,000	110,000	110,000
	Output - Btuh	84,000	104,000	105,000
	Temperature rise range - °F	45 - 75	50 - 80	45 - 75
	Gas Manifold Pressure (in. w.g.) Nat. Gas / LPG/Propane	3.5 / 10.0	3.5 / 10	3.5 / 10
	High static - in. w.g.	0.5	0.5	0.5
Connections in.	Intake / Exhaust Pipe (PVC)	2 / 2	2 / 2	2 / 2
	Gas pipe size IPS	1/2	1/2	1/2
	Condensate Drain Trap (PVC pipe) - i.d.	3/4	3/4	3/4
	with furnished 90° street elbow	3/4 slip x 3/4 Mipt	3/4 slip x 3/4 Mipt	3/4 slip x 3/4 Mipt
	with field supplied (PVC coupling) - o.d.	3/4 slip x 3/4 MPT	3/4 slip x 3/4 MPT	3/4 slip x 3/4 MPT
Indoor Blower	Wheel nom. dia. x width - in.	10 x 10	10 x 10	11-1/2 x 10
	Motor Type	DC Brushless	DC Brushless	DC Brushless
	Motor output - hp	3/4	3/4	1
	Tons of add-on cooling	2.5 - 4	2.5 - 4	3 - 5
	Air Volume Range - cfm	830 - 1710	850 - 1750	1085 - 2150
Electrical Data	Voltage	120 volts - 60 hertz - 1 phase		
	Blower motor full load amps	8.4	8.4	10.9
	Maximum overcurrent protection	15	15	15
Shipping Data	lbs. - 1 package	144	156	158

NOTE - Filters and provisions for mounting are not furnished and must be field provided.

[1] Annual Fuel Utilization Efficiency based on DOE test procedures and according to FTC labeling regulations. Isolated combustion system rating for non-weatherized furnaces.

INSTALLATION CLEARANCES

Sides	[1] 0 inches (0 mm)
Rear	0 inches (0 mm)
Top/Plenum	1 inch (25 mm)
Front	0 inches (0 mm)
Front (service/alcove)	24 inches (610 mm)
Floor	[2] Combustible

NOTE − Air for combustion must conform to the methods outlined in the National Fuel Gas Code (NFPA 54/ANSI−Z223.1) or the National Standard of Canada CAN/CSA−B149.1 Natural Gas and Propane Installation Code".

NOTE − In the U.S. flue sizing must conform to the methods outlined in the current National Fuel Gas Code (NFPA 54/ANSI−Z223.1) or applicable provisions of local building codes. In Canada flue sizing must conform to the methods outlined in National Standard of Canada CAN/CSA−B149.1.

[1] Allow proper clearances to accommodate condensate trap and vent pipe installation.

[2] Do not install the furnace directly on carpeting, tile, or other combustible materials other than wood flooring.

GAS HEAT ACCESSORIES

Input	High Altitude Pressure Switch Kit		Natural Gas to LPG/Propane Kit	LPG/Propane to Natural Gas Kit	Natural Gas High Altitude Orifice Kit	LPG/Propane High Altitude Orifice Kit	Muffler (US Only)
	4501 - 7500 ft.	7501 - 10,000 ft.	0 - 7500 ft.	0 - 7500 ft.	7501 - 10,000 ft.	7501 - 10,000 ft.	
030	**11U65**	**11U66**	**17H63**	**N/A**	**14C90**	**17H66**	**15Y66 (2-inch)**
045	**11U65**	**11U66**	**11K49**	**73W81**	**73W37**	**11K44**	**15Y66 (2-inch)**
070	**11U65**	**11U66**	**11K49**	**73W81**	**73W37**	**11K44**	**15Y66 (2-inch)**
090	**11U65**	**11U66**	**11K49**	**73W81**	**73W37**	**11K44**	**15Y66 (2-inch)**
110	**11U65**	**11U66**	**11K49**	**73W81**	**73W37**	**11K44**	**[2] 15Y66 (2-inch) 16A56 (3-inch)**

[2] Two-inch diameter muffler (**15Y66**) is optional for 110 input model with a maximum vent pipe length of up to 29 ft.
Three-inch diameter muffler (**16A56**) is optional for 110 input model with a minimum vent pipe length of 30 ft.

REFRIGERANT DETECTION SYSTEM (RDS) COMPONENTS

Description		Order No.
Refrigerant Detection System (RDS) Coil Sensor Kit		**26Z69**
Refrigerant Detection System (RDS) Blower Control Board	Any Lennox® Communicating Furnace or any Non-Communicating 24V Furnace (Universal)	**27A03**
	Any Non-Communicating 24V Furnace	**27A02**

NOTE - Communicating Blower Control Board and Sensor can be used universally with Lennox® communicating furnace or any non-communicating 24 volt furnace.
Non-Communicating Blower Control Board and Sensor can be used with any non-communicating 24 volt furnace.

HIGH ALTITUDE DERATE

NOTE - Units may be installed at altitudes up to 10,000 ft.
At altitudes above 4501 ft. the unit must be derated to match the manifold pressure information shown below.
Units installed at altitudes of 4501 to 10,000 ft. require a pressure switch change.
Units installed at altitudes of 7501 to 10,000 ft. require an orifice change.
See the Gas Heat Accessories table for ordering information.

NOTE - This is the only permissible derate for these units.

NOTE - In Canada, certification for installations at elevations over 4500 feet is the jurisdiction of local authorities.

Input	Gas	Manifold Pressure in. w.g.					Supply Line Pressure in. w.g.	
		0 - 4500 ft.	4501 - 5500 ft.	5501 - 6500 ft.	6501 - 7500 ft.	7501 - 10,000 ft.	0 - 10,000 ft.	
All Sizes	Natural	3.5	3.3	3.2	3.1	3.5	4.5	13.0
	LPG/Propane	10.0	9.4	9.1	8.9	10.0	11.0	13.0

OPTIONAL ACCESSORIES

			"B" Width Models	"C" Width Models
CABINET ACCESSORIES				
Horizontal Suspension Kit - Horizontal only			**51W10**	**51W10**
Return Air Base - Upflow only			**50W98**	**50W99**
High Performance Economizer (Commercial Only)			**10U53**	**10U53**
CONDENSATE DRAIN KITS				
Condensate Drain Heat Cable		6 ft.	**26K68**	**26K68**
		24 ft.	**26K69**	**26K69**
Crawl Space Vent Drain Kit		US	**51W18**	**51W18**
		Canada	**15Z70**	**15Z70**
CONTROLS				
Blower Relay Kit (for two-stage outdoor units)			**85W66**	**85W66**
M30 Smart Wi-Fi Thermostat			**15Z69**	**15Z69**
Remote Outdoor Temperature Sensor			**X2658**	**X2658**
Furnace Twinning Panel			**Y3653**	**Y3653**
Furnace Twinning Kit			**16W72**	**16W72**
Transformer (75VA)			**27J32**	**27J32**
FILTER KITS				
[1] Air Filter and Rack Kit	Horizontal (end)	Size of filter - in.	**87L96** - 18 x 25 x 1	**87L97** - 20 x 25 x 1
	Side Return	Single	**44J22**	**44J22**
		Ten Pack	**66K63**	**66K63**
		Size of filter - in.	16 x 25 x 1	16 x 25 x 1
TERMINATION KITS				
See Installation Instructions for specific venting information.				
Direct Vent	Concentric	US - 2 in.	**71M80**	**69M29**
		3 in.	**- - -**	**60L46**
		Canada - 2 in.	**44W92**	**44W92**
		3 in.	**- - -**	**44W93**
	Flush-Mount	US - 2, 2-1/2 or 3 in.	**51W11**	**51W11**
		Canada - 2, 2-1/2 or 3 in.	**51W12**	**51W12**
	Wall - Close Couple	US - 2 in.	**22G44**	**- - -**
		3 in.	**44J40**	**44J40**
	Wall - Close Couple WTK	Canada - 2 in.	**30G28**	**- - -**
		3 in.	**81J20**	**81J20**
	Roof Termination Flashing Kit (no vent pipe - 2 flashings)	2 in.	**15F75**	**15F75**
		3 in.	**44J41**	**44J41**
VENTING				
Flue Coupling		2 in.	**17H92**	**17H92**

[1] Cleanable polyurethane frame type filter.

NOTE - Termination Kits (**44W92**, **44W93**, **30G28**, **51W12**, **81J20**) and Crawl Space Vent Drain Kit (**15Z70**) are certified to ULC S636 standard for use in Canada only.

OUTDOOR TERMINATION KIT USAGE

Input Size	Vent Pipe Diameter (in.)	Standard Terminations				Concentric Terminations		
		Flush Mount Kit	Wall Kit		Field Fabricated Exhaust Accelerator Size Required	Concentric Kit		
			2 inch	3 inch		1-1/2 inch	2 inch	3 inch
		51W11 (US) [5] 51W12 (CA)	22G44 (US) [5] 30G28 (CA)	44J40 (US) [5] 81J20 (CA)		71M80 (US) [5] 44W92 (CA)	69M29 (US) [5] 44W92 (CA)	60L46 (US) [5] 44W93 (CA)
030/045	[1] 1-1/2	[4] YES	YES	[2] YES	1-1/2 in.	[3] YES	- - -	- - -
	2	[4] YES	YES	[2] YES	1-1/2 in.	[3] YES	- - -	- - -
	2-1/2	[4] YES	YES	[2] YES	1-1/2 in.	[3] YES	- - -	- - -
	3	[4] YES	YES	[2] YES	1-1/2 in.	[3] YES	- - -	- - -
070	[1] 1-1/2	[4] YES	YES	[2] YES	1-1/2 in.	[3] YES	- - -	- - -
	2	[4] YES	YES	[2] YES	1-1/2 in.	[3] YES	- - -	- - -
	2-1/2	[4] YES	YES	[2] YES	1-1/2 in.	[3] YES	- - -	- - -
	3	[4] YES	YES	[2] YES	1-1/2 in.	[3] YES	- - -	- - -
090	2	[4] YES	- - -	YES	2 in.	- - -	YES	YES
	2-1/2	[4] YES	- - -	YES	2 in.	- - -	YES	YES
	3	[4] YES	- - -	YES	2 in.	- - -	YES	YES
110	2	YES	- - -	YES	2 in.	- - -	YES	YES
	2-1/2	YES	- - -	YES	2 in.	- - -	YES	YES
	3	YES	- - -	YES	2 in.	- - -	YES	YES

NOTE - Standard Terminations do not include any vent pipe or elbows external to the structure.
Any vent pipe or elbows external to the structure must be included in total vent length calculations. See Vent Length Tables.

[1] 2 inch to 1-1/2 inch reducer required, must be field provided.

[2] Requires field provided 1-1/2 in. outdoor exhaust accelerator.

[3] Concentric Kits **71M80** and **44W92** include 1-1/2 in. outdoor exhaust accelerator, required when used with 030, 045 and 070 input models. Accelerator is not used with 090 or 110 input models. When using 1-1/2 in. piping, the pipe must be transitioned to 2 in. pipe when used with the Concentric Kit.

[4] Flush Mount Kit **51W11** and **51W12** includes 1-1/2 in. outdoor exhaust accelerator, required when used with 030, 045, 070 and 090 input models. Accelerator is not used with 110 input models. When using 1-1/2 in. piping, the pipe must be transitioned to 2 in. pipe when used with the Flush Mount Kit.

[5] Termination Kits **30G28**, **44W92**, **44W93**, **51W12** and **81J20** are certified to ULC S636 standard for use in Canada only.

VENT LENGTHS - UNINSULATED EXHAUST PIPE IN UNCONDITIONED SPACE

[1] Winter Design Temperatures	Vent Pipe Diameter	Unit Input Size									
		030		045		070		090		110	
		Maximum Uninsulated Exhaust Vent Length (ft.)									
		PVC	PolyPro InnoFlue	PVC	PolyPro InnoFlue	PVC	PolyPro InnoFlue	PVC	PolyPro InnoFlue	PVC	PolyPro InnoFlue
32 to 21°F	1-1/2 in.	N/A	N/A	25	N/A	25	N/A	N/A	N/A	N/A	N/A
	2 in.	N/A	N/A	18	16	31	28	50	48	30	30
	2-1/2 in.	N/A	N/A	13	N/A	24	N/A	42	N/A	56	N/A
	3 in.	N/A	N/A	9	9	18	18	35	35	47	47
20 to 1°F	1-1/2 in.	N/A	N/A	15	N/A	20	N/A	N/A	N/A	N/A	N/A
	2 in.	N/A	N/A	9	8	18	16	32	29	30	30
	2-1/2 in.	N/A	N/A	5	N/A	13	N/A	24	N/A	34	N/A
	3 in.	N/A	N/A	N/A	N/A	8	8	19	19	26	26
0 to –20°F	1-1/2 in.	N/A	N/A	10	N/A	15	N/A	N/A	N/A	N/A	N/A
	2 in.	N/A	N/A	5	N/A	12	10	22	19	30	27
	2-1/2 in.	N/A	N/A	N/A	N/A	7	N/A	15	N/A	22	N/A
	3 in.	N/A	N/A	N/A	N/A	N/A	N/A	10	10	16	16

NOTE - Concentric terminations are equivalent to 5 ft. of straight pipe and should be included when measuring total pipe length.

[1] Refer to 99% Minimum Design Temperature table provided in the current edition of the ASHRAE Handbook-Fundamentals.

PolyPro® poly-propylene vent pipe is a registered trademark of DuraVent®.

Innoflue® is a registered trademark of Centrotherm Eco Systems.

VENT LENGTHS

STANDARD TERMINATION AT ELEVATION 0 - 10,000 ft.

	Pipe Size	1-1/2 in.				2 in.				2-1/2 in.				3 in.			
	Input	030/045	070	090	110	030/045	070	090	110	030/045	070	090	110	030/045	070	090	110
No. of 90 ELL	1	25	20	N/A	N/A	81	66	44	24	115	100	68	43	137	137	118	118
	2	20	15	N/A	N/A	76	61	39	19	110	95	63	38	132	132	113	113
	3	15	10	N/A	N/A	71	56	34	14	105	90	58	33	127	127	108	108
	4	10	N/A	N/A	N/A	66	51	29	N/A	100	85	53	28	122	122	103	103
	5	N/A	N/A	N/A	N/A	61	46	24	N/A	95	80	48	23	117	117	98	98
	6	N/A	N/A	N/A	N/A	56	41	19	N/A	90	75	43	18	112	112	93	93
	7	N/A	N/A	N/A	N/A	51	36	14	N/A	85	70	38	13	107	107	88	88
	8	N/A	N/A	N/A	N/A	46	31	N/A	N/A	80	65	33	N/A	102	102	83	83
	9	N/A	N/A	N/A	N/A	41	26	N/A	N/A	75	60	28	N/A	97	97	78	78
	10	N/A	N/A	N/A	N/A	36	21	N/A	N/A	70	55	23	N/A	92	92	73	73

CONCENTRIC TERMINATION ELEVATION 0 - 10,000 ft.

	Pipe Size	1-1/2 in.				2 in.				2-1/2 in.				3 in.			
	Input	030/045	070	090	110	030/045	070	090	110	030/045	070	090	110	030/045	070	090	110
No. of 90 ELL	1	20	15	N/A	N/A	73	58	42	22	105	90	64	39	121	121	114	114
	2	15	10	N/A	N/A	68	53	37	17	100	85	59	34	116	116	109	109
	3	10	N/A	N/A	N/A	63	48	32	12	95	80	54	29	111	111	104	104
	4	N/A	N/A	N/A	N/A	58	43	27	N/A	90	75	49	24	106	106	99	99
	5	N/A	N/A	N/A	N/A	53	38	22	N/A	85	70	44	19	101	101	94	94
	6	N/A	N/A	N/A	N/A	48	33	17	N/A	80	65	39	14	96	96	89	89
	7	N/A	N/A	N/A	N/A	43	28	12	N/A	75	60	34	N/A	91	91	84	84
	8	N/A	N/A	N/A	N/A	38	23	N/A	N/A	70	55	29	N/A	86	86	79	79
	9	N/A	N/A	N/A	N/A	33	18	N/A	N/A	65	50	24	N/A	81	81	74	74
	10	N/A	N/A	N/A	N/A	28	13	N/A	N/A	60	45	19	N/A	76	76	69	69

NOTES - Additional vent pipe and elbows used to terminate vent pipe outside the structure must be included in the total vent length calculation.
Intake and exhaust pipes are sized separately.
Values in table are for separate intake or exhaust pipe lengths.
Both intake and exhaust pipe must be the same size diameter.

VENT LENGTHS (EXHAUST) - VENTILATED ATTIC OR CRAWLSPACE INTAKE AIR - FEET

STANDARD TERMINATION AT ELEVATION 0 - 10,000 ft.

	Pipe Size	1-1/2 in.				2 in.				2-1/2 in.				3 in.			
	Input	030/045	070	090	110	030/045	070	090	110	030/045	070	090	110	030/045	070	090	110
No. of 90 ELL	1	20	15	N/A	N/A	71	56	34	14	100	100	78	43	118	117	98	98
	2	15	10	N/A	N/A	66	51	29	9	95	95	73	38	113	112	93	93
	3	10	N/A	N/A	N/A	61	46	24	4	90	90	68	33	108	107	88	88
	4	N/A	N/A	N/A	N/A	56	41	19	N/A	85	85	63	28	103	102	83	83
	5	N/A	N/A	N/A	N/A	51	36	14	N/A	80	80	58	23	98	97	78	78
	6	N/A	N/A	N/A	N/A	46	31	9	N/A	85	75	63	18	93	92	73	73
	7	N/A	N/A	N/A	N/A	41	26	4	N/A	70	70	48	13	88	87	68	68
	8	N/A	N/A	N/A	N/A	36	21	N/A	N/A	65	65	43	8	83	82	63	63
	9	N/A	N/A	N/A	N/A	31	16	N/A	N/A	60	60	38	3	78	77	58	58
	10	N/A	N/A	N/A	N/A	26	11	N/A	N/A	55	55	33	N/A	73	72	53	53

NOTES - Additional vent pipe and elbows used to terminate vent pipe outside the structure must be included in the total vent length calculation.

[1] NOTE - 60C size units that require air volumes over 1800 cfm must have one of the following:
1. Single side return air and Optional Return Air Base with transition that must accommodate required 20 x 25 x 1 inch (508 x 635 x 25 mm) air filter to maintain proper velocity.
2. Bottom return air.
3. Return air from both sides.
4. Bottom and one side return air.

See Blower Performance Tables for additional information.

[2] Optional Side Return Air Filter Kit is not for use with the Optional Return Air Base.

Flue Condensate Trap Assembly
Furnished for external field installation on either side of unit. (See installation instructions for additional information.)

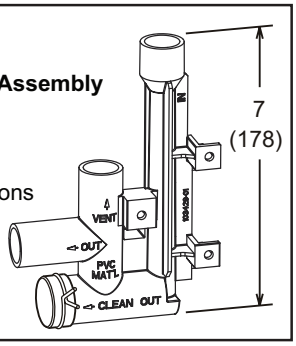

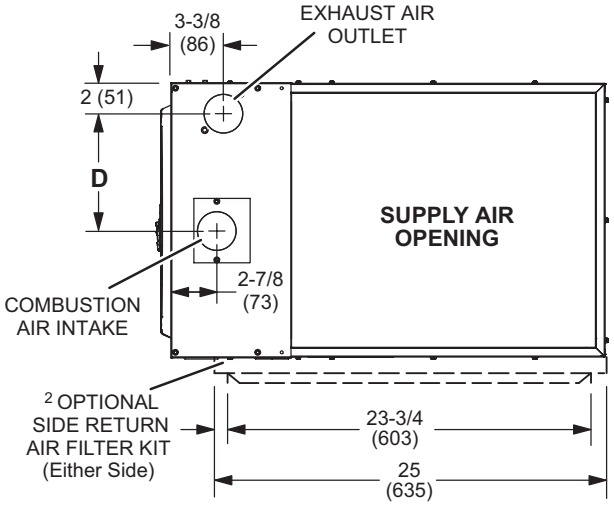

TOP VIEW

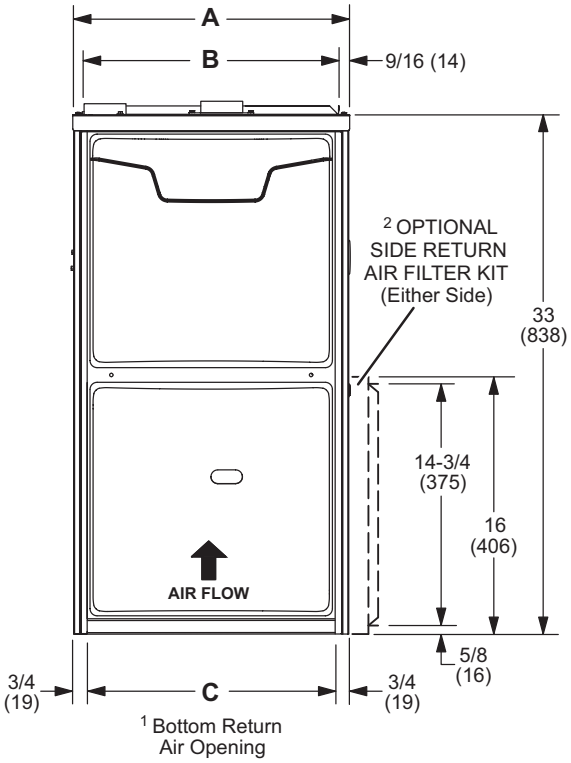

FRONT VIEW

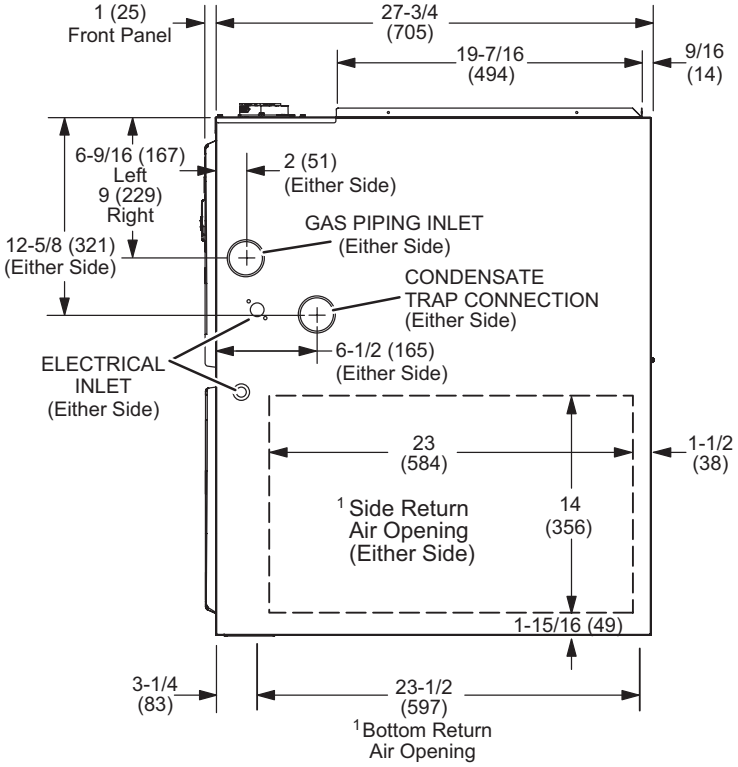

SIDE VIEW

Model No.	A		B		C		D	
	in.	mm	in.	mm	in.	mm	in.	mm
ML193UH030XE36B ML193UH045XE36B ML193UH070XE36B	17-1/2	446	16-3/8	416	16	406	7-5/8	194
ML193UH090XE36C ML193UH090XE48C ML193UH110XE48C ML193UH110XE60C	21	533	19-7/8	505	19-1/2	495	9-3/8	238

LEFT-HAND AIR DISCHARGE

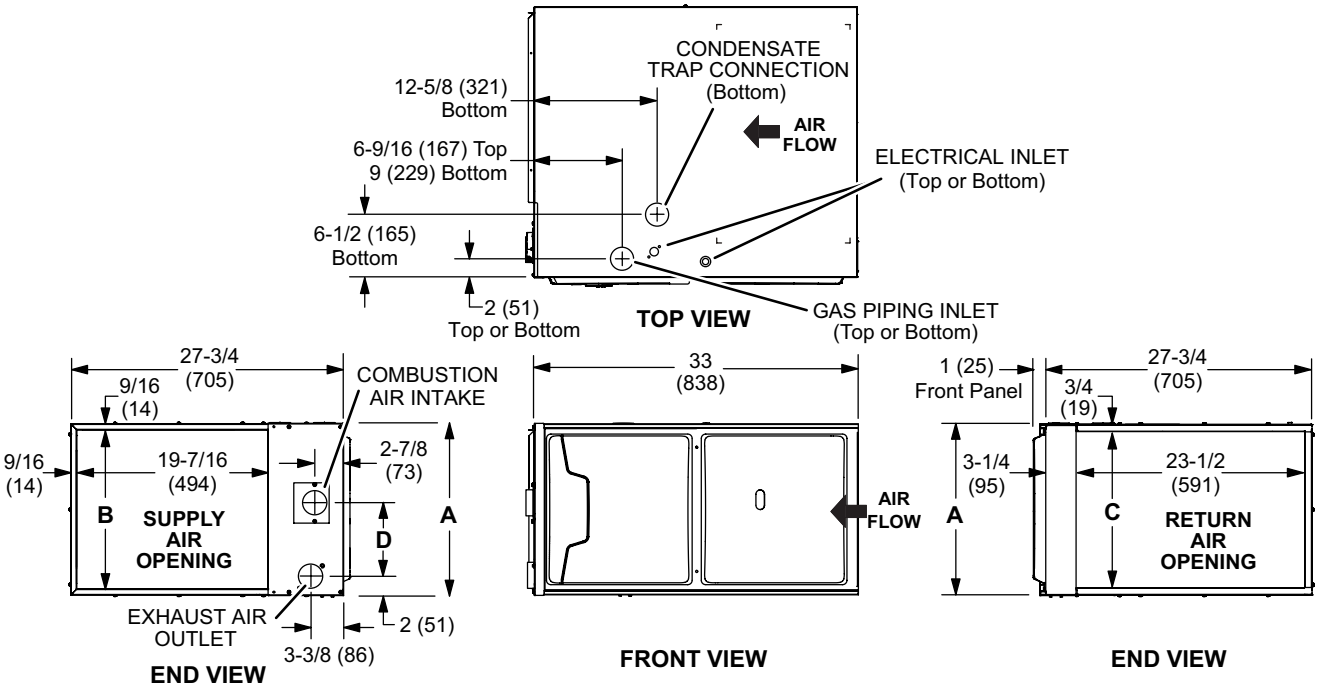

RIGHT-HAND AIR DISCHARGE

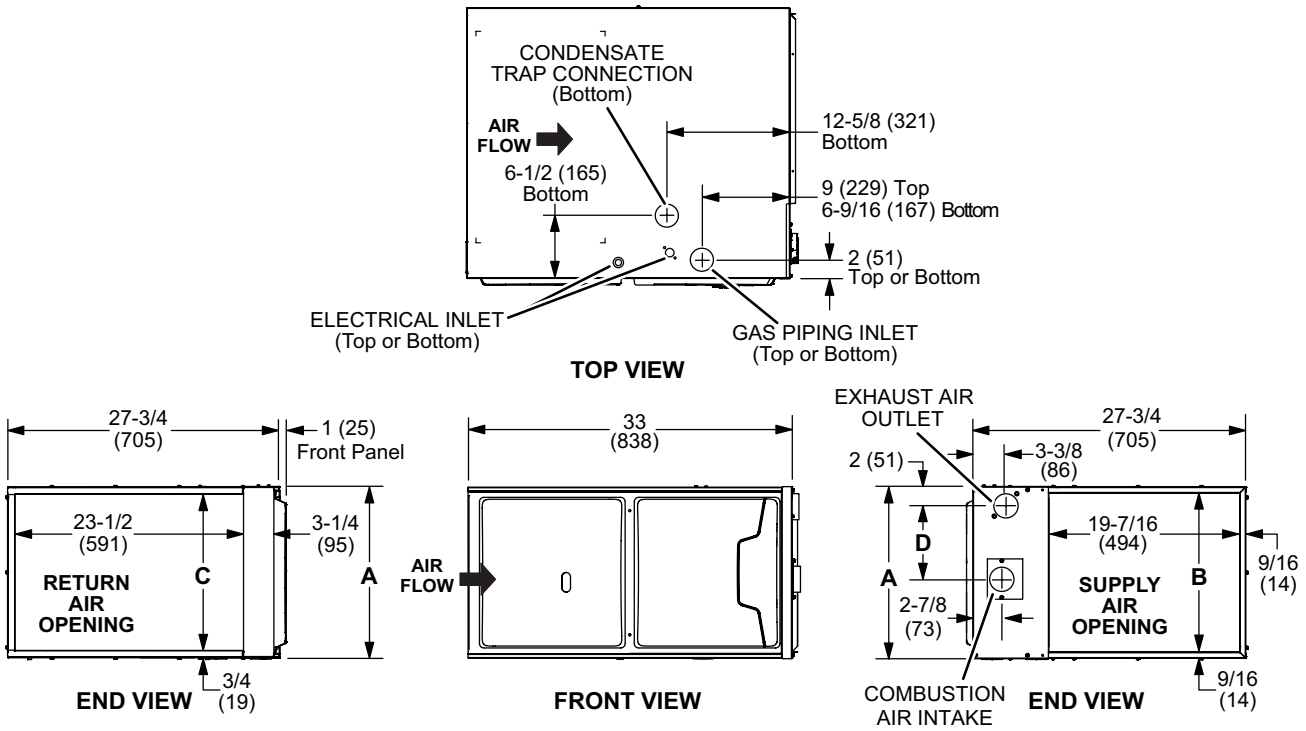

Model No.	A		B		C		D	
	in.	mm	in.	mm	in.	mm	in.	mm
ML193UH030XE36B ML193UH045XE36B ML193UH070XE36B	17-1/2	446	16-3/8	416	16	406	7-5/8	194
ML193UH090XE36C ML193UH090XE48C ML193UH110XE48C ML193UH110XE60C	21	533	19-7/8	505	19-1/2	495	9-3/8	238

HORIZONTAL (END) FILTER KIT

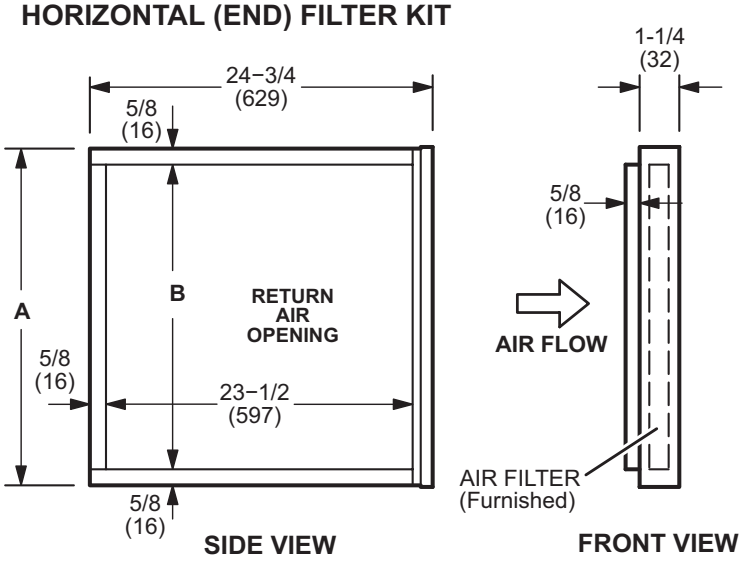

Furnace Cabinet Width	Catalog Number	A		B	
		in.	mm	in.	mm
B	87L96	18	457	16-3/4	425
C	87L97	21	533	18-3/4	476

OPTIONAL RETURN AIR BASE

(Upflow Applications Only - For use with B and C width cabinets)

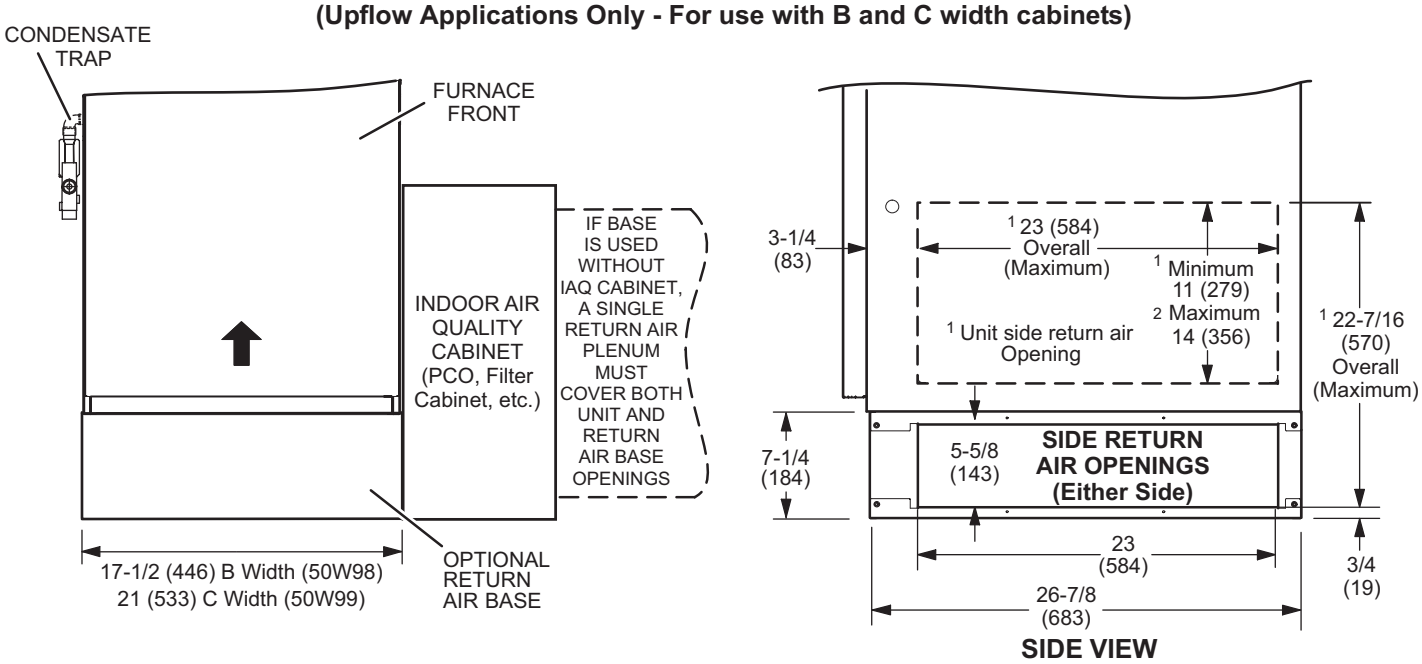

NOTE- Optional Side Return Air Filter Kits are not for use with Optional Return Air Base.

[1] Both the unit return air opening and the base return air opening must be covered by a single plenum or IAQ cabinet. Minimum unit side return air opening dimensions for units requiring 1800 cfm or more of air (W x H): 23 x 11 in. (584 x 279 mm). The opening can be cut as needed to accommodate plenum or IAQ cabinet while maintaining dimensions shown. Side return air openings must be cut in the field. There are cutting guides stenciled on the cabinet for the side return air opening. The size of the opening must not extend beyond the markings on the furnace cabinet.

[2] To minimize pressure drop, the largest opening height possible, up to 14 in. (356 mm), is preferred.

FLUSH-MOUNT VENT TERMINATION KIT 51W11 (US) or 51W12 (CANADA)

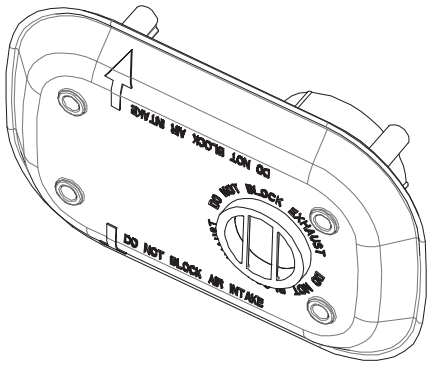

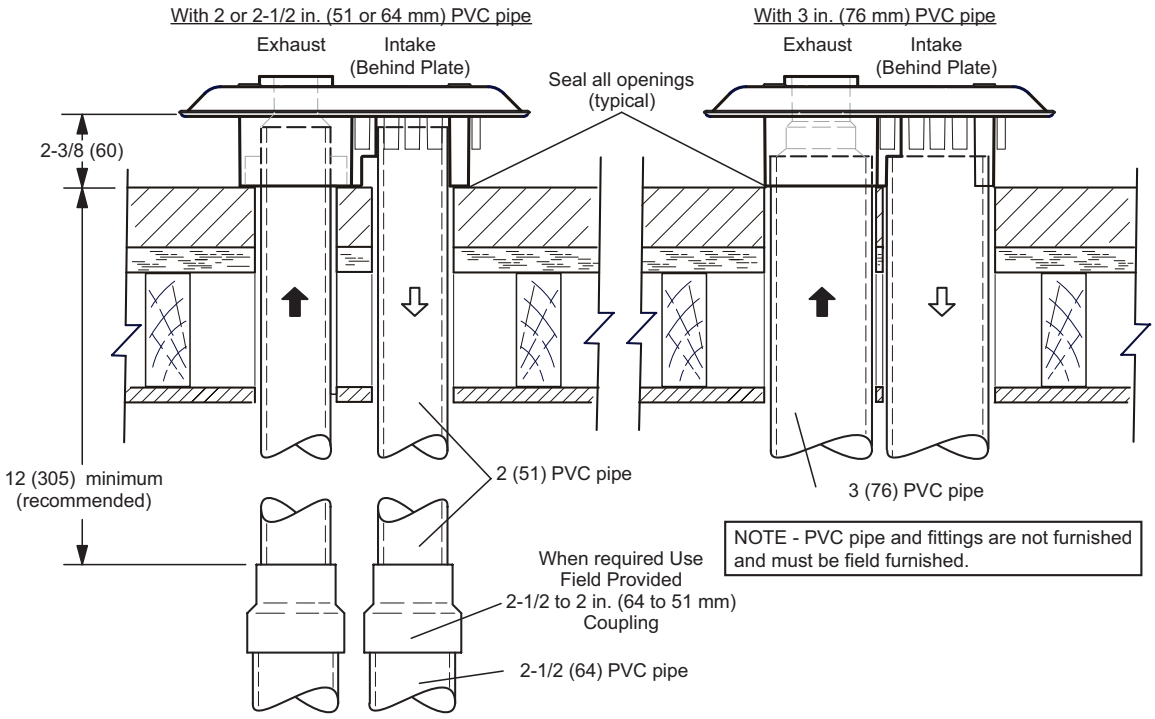

NOTE - PVC pipe and fittings are not furnished and must be field furnished.

MUFFLERS
15Y66 - 2-inch
16A56 - 3-inch

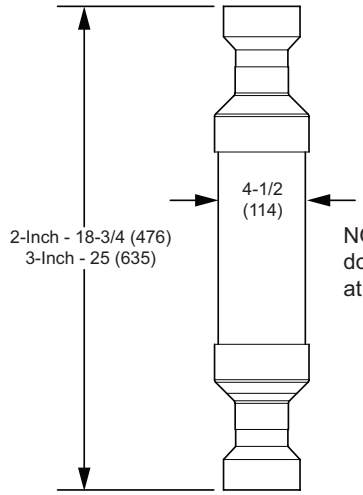

(Installed Vertically in the Exhaust Pipe)

NOTE - Two-inch mufflers do not have reducers at each end.

CONCENTRIC WALL TERMINATION APPLICATIONS

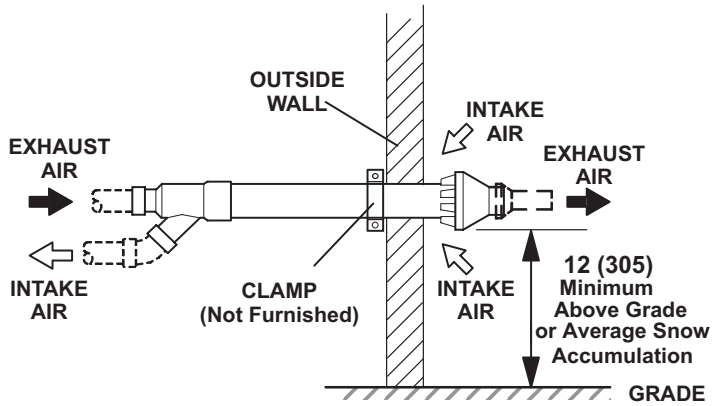

CONCENTRIC ROOF TERMINATION APPLICATIONS

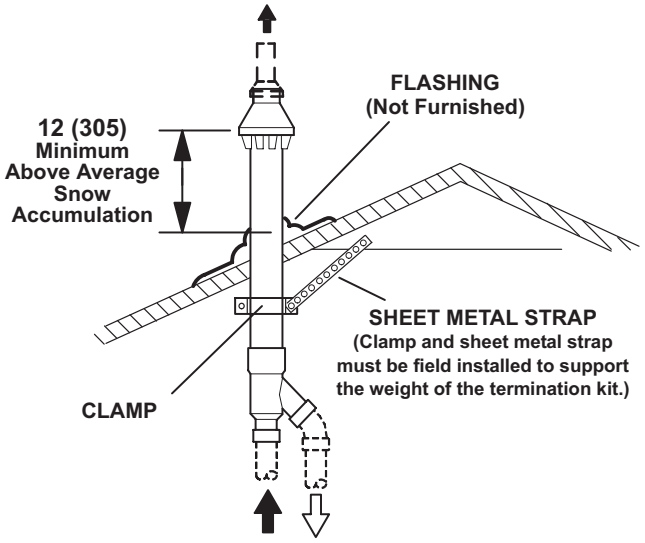

71M80 / 69M29 / 44W92 − 2 inch kits
60L46 / 44W93 − 3 inch kits
See Installation Instructions for additional information.

Note - Field provided reducer may be required to adapt different vent pipe sizes to termination.

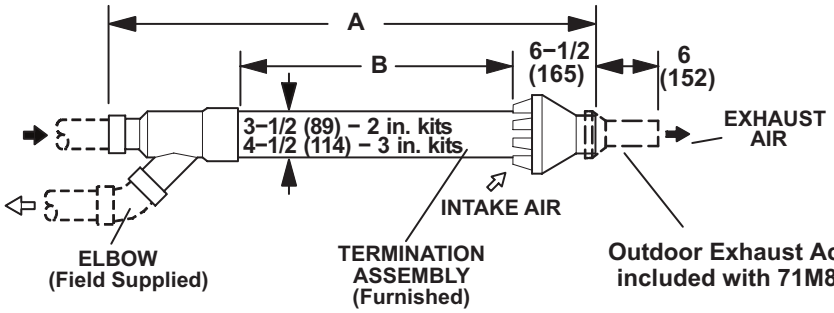

Cat. No.	A		B	
	in.	mm	in.	mm
71M80 69M29	33−3/8	848	16−3/4	425
44W92 (Canada)	29	737	15−1/2	394
60L46	38−7/8	987	21−3/16	538
44W93 (Canada)	36−1/8	918	19−1/2	495

NOTE − Typical illustration for dimensions only. Design may vary depending on kit ordered.

WALL TERMINATION KITS (CLOSE-COUPLE)
EXTENDED VENT FOR GRADE CLEARANCE
2 inch (51 mm) 22G44 (US)
3 inch (76 mm) 44J40 (US)
See Installation Instructions for additional information.

Note - Field provided reducer may be required to adapt different vent pipe sizes to termination.

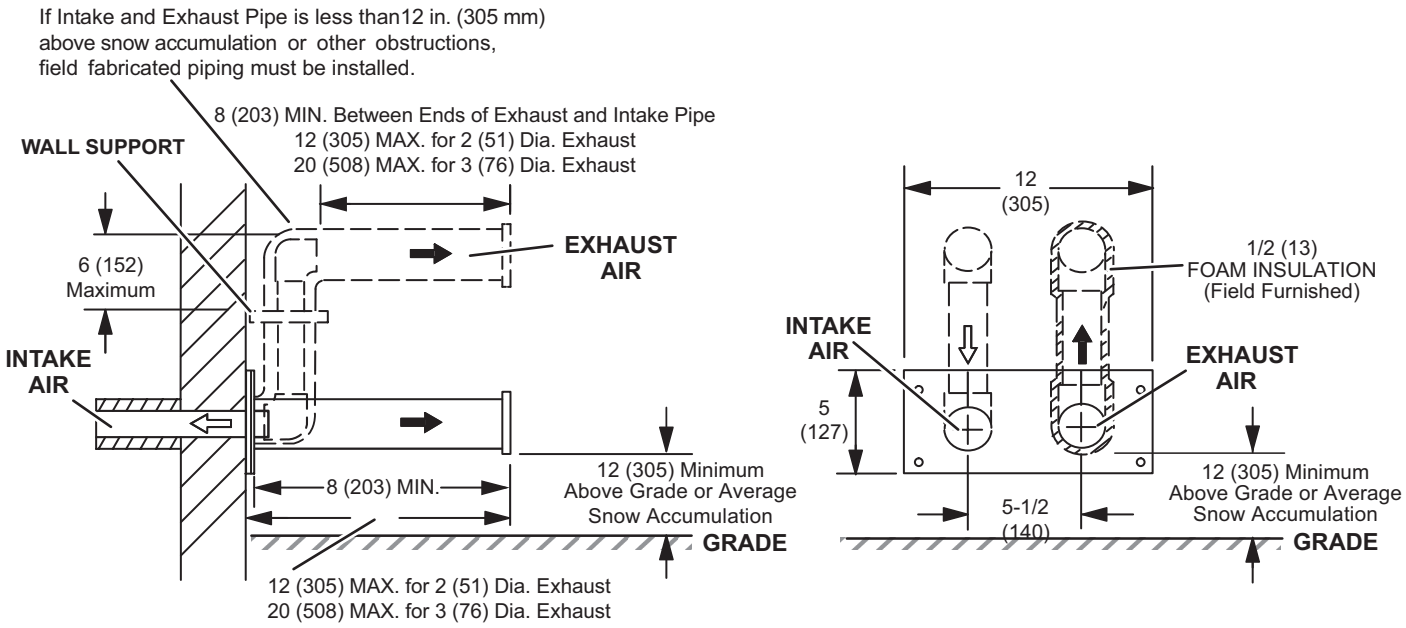

WALL TERMINATION KITS (CLOSE-COUPLE)
EXTENDED VENT FOR GRADE CLEARANCE
2 inch (51 mm) 30G28 (WTK Canada)
3 inch (76 mm) 81J20 (WTK Canada)
See Installation Instructions for additional information.

Note - Field provided reducer may be required to adapt different vent pipe sizes to termination.

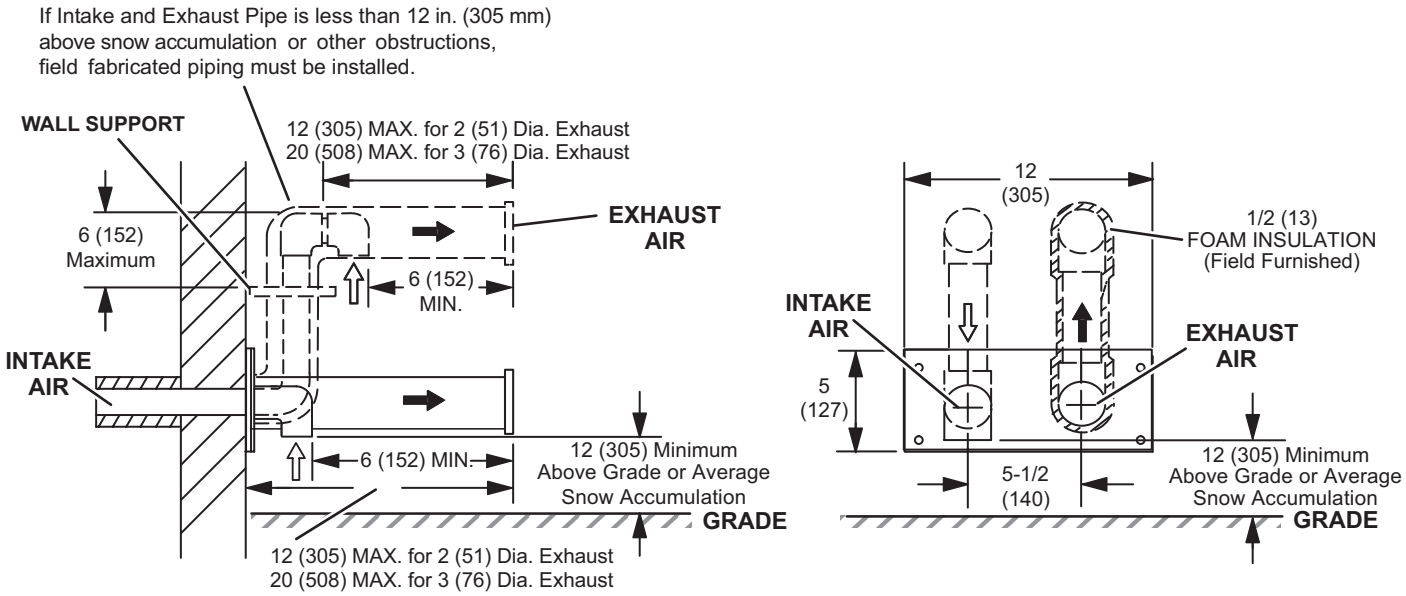

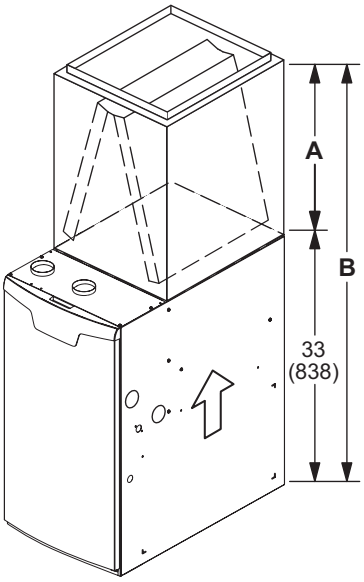

UPFLOW POSITION - CASED

Model		A		B	
CK40CT	**C35/CX35**	**in.**	**mm**	**in.**	**mm**
CK40CT-18/24A CK40CT-18/24B	C35/CX35-18/24A C35/CX35-18/24B	16-1/2	419	49-1/2	1257
CK40CT-24A CK40CT-24B	C35/CX35-24A C35/CX35-24B	18-1/2	470	51-1/2	1308
CK40CT-30A CK40CT-30B	C35/CX35-30A C35/CX35-30B	22-1/2	572	55-1/2	1410
CK40CT-30/36A CK40CT-30/36B CK40CT-30/36C	C35/CX35-30/36A C35/CX35-30/36B C35/CX35-30/36C	24-1/2	622	57-1/2	1461
CK40CT-36A CK40CT-36B	C35/CX35-36A C35/CX35-36B	24-1/2	622	57-1/2	1461
CK40CT-48B CK40CT-48C	C35/CX35-48B C35/CX35-48C	27-1/2	699	60-1/2	1537
CK40CT-49C	C35/CX35-49C	29-1/2	749	62-1/2	1588
CK40CT-50/60C	C35/CX35-50/60C	27-1/2	699	60-1/2	1537
CK40CT-60C	CX35-60C	31-1/2	800	64-1/2	1638

UPFLOW POSITION - UNCASED

Model		A		B	
CK40UT	**C35**	**in.**	**mm**	**in.**	**mm**
CK40UT-18/24A CK40UT-18/24B	C35-18/24A C35-18/24B	14-1/8	359	47-1/8	1197
CK40UT-24A CK40UT-24B	C35-24A C35-24B	16-3/8	416	49-3/8	1254
CK40UT-30A CK40UT-30B	C35-30A C35-30B	20-3/4	527	53-3/4	1365
CK40UT-30/36A CK40UT-30/36B CK40UT-30/36C	C35-30/36A C35-30/36B C35-30/36C	22-1/4	565	55-1/4	1403
CK40UT-36A CK40UT-36B	C35-36A C35-36B	22-3/8	568	55-3/8	1407
CK40UT-48B CK40UT-48C	C35-48B C35-48C	26-1/4	667	59-1/4	1505
CK40UT-49C	C35-49C	28-1/2	724	61-1/2	1562
CK40UT-50/60C	C35-50/60C	25-7/8	657	58-7/8	1495
CK40UT-60C	C35-60C	30-5/8	778	63-5/8	1616

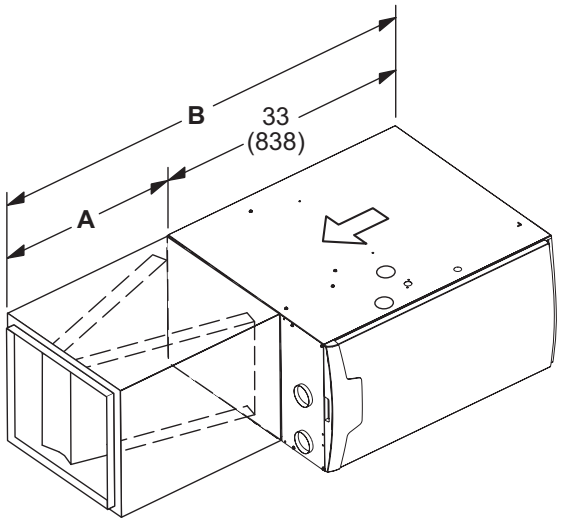

HORIZONTAL POSITION

Model		A		B	
CK40HT	**CHX35**	**in.**	**mm**	**in.**	**mm**
CK40HT-18A CK40HT-24A CK40HT-24B CK40HT-30B CK40HT-36A CK40HT-36B CK40HT-36C CK40HT-42C CK40HT-48C	CHX35-18A CHX35-24A CHX35-24B CHX35-30B CHX35-36A CHX35-36B CHX35-36C CHX35-42C CHX35-48C	26-1/2	673	59-1/2	1511
CK40CT-30A CK40CT-42B CK40CT-48B CK40CT-51/61C	CHX35-30A CHX35-42B CHX35-48B CHX35-51/61C	31-1/2	880	64-1/2	1638

BLOWER DATA

ML193UH030XE36B PERFORMANCE (Less Filter)

External Static Pressure in. w.g.	Air Volume / Watts at Various Blower Speeds									
	High (Black)		Medium-High (Brown)		Medium (Blue)		Medium-Low (Yellow)		Low (Red)	
	cfm	Watts	cfm	Watts	cfm	Watts	cfm	Watts	cfm	Watts
0.00	- - -	- - -	- - -	- - -	- - -	- - -	- - -	- - -	- - -	- - -
0.10	1333	338	1159	211	943	127	725	74	661	63
0.20	1311	344	1120	214	903	133	681	78	512	52
0.30	1270	350	1093	225	860	139	631	82	458	57
0.40	1244	358	1053	231	827	145	586	87	385	61
0.50	1223	369	1028	239	784	150	535	93	310	65
0.60	1191	376	993	247	747	156	472	98	- - -	- - -
0.70	1165	387	966	254	709	163	410	102	- - -	- - -
0.80	1138	395	929	261	669	168	351	107	- - -	- - -
0.90	1064	376	904	270	619	175	- - -	- - -	- - -	- - -
1.00	858	314	869	276	574	180	- - -	- - -	- - -	- - -

ML193UH045XE36B PERFORMANCE (Less Filter)

External Static Pressure in. w.g.	Air Volume / Watts at Various Blower Speeds									
	High (Black)		Medium-High (Brown)		Medium (Blue)		Medium-Low (Yellow)		Low (Red)	
	cfm	Watts	cfm	Watts	cfm	Watts	cfm	Watts	cfm	Watts
0.00	1413	333	1301	263	1157	191	929	108	778	71
0.10	1385	341	1270	270	1126	199	891	114	734	76
0.20	1357	349	1238	278	1096	206	853	120	690	81
0.30	1331	359	1209	286	1064	214	814	127	642	86
0.40	1304	369	1182	295	1031	221	776	133	596	92
0.50	1277	379	1151	303	1001	230	736	140	550	97
0.60	1251	385	1123	312	969	237	698	145	504	101
0.70	1227	397	1095	321	936	244	657	151	459	106
0.80	1208	412	1066	329	903	252	619	156	414	111
0.90	1158	403	1037	337	871	259	581	161	359	116
1.00	983	329	990	337	837	266	543	166	322	120

ML193UH070XE36B PERFORMANCE (Less Filter)

External Static Pressure in. w.g.	Air Volume / Watts at Various Blower Speeds									
	High (Black)		Medium-High (Brown)		Medium (Blue)		Medium-Low (Yellow)		Low (Red)	
	cfm	Watts	cfm	Watts	cfm	Watts	cfm	Watts	cfm	Watts
0.00	1448	304	1311	235	1177	170	939	100	805	65
0.10	1411	313	1280	245	1139	180	899	105	748	70
0.20	1374	322	1249	255	1101	190	859	110	691	75
0.30	1334	329	1220	263	1061	196	817	117	638	81
0.40	1305	339	1179	268	1029	201	770	123	580	86
0.50	1273	348	1156	278	994	212	720	128	531	91
0.60	1244	355	1123	288	950	217	677	135	476	96
0.70	1214	367	1084	294	916	223	627	142	423	100
0.80	1189	375	1045	302	889	233	581	145	366	105
0.90	1157	384	1016	310	842	239	538	151	- - -	- - -
1.00	1124	392	978	318	807	247	489	155	- - -	- - -

BLOWER DATA

ML193UH090XE36C PERFORMANCE (Less Filter)

External Static Pressure in. w.g.	Air Volume / Watts at Various Blower Speeds									
	High (Black)		Medium-High (Brown)		Medium (Blue)		Medium-Low (Yellow)		Low (Red)	
	cfm	Watts	cfm	Watts	cfm	Watts	cfm	Watts	cfm	Watts
0.00	1478	303	1358	236	1211	173	977	98	863	72
0.10	1447	313	1326	246	1177	182	935	105	794	74
0.20	1416	324	1293	256	1143	191	893	113	725	76
0.30	1389	335	1263	266	1109	200	852	119	680	82
0.40	1359	344	1234	276	1077	208	812	126	628	88
0.50	1321	362	1202	285	1042	217	770	133	578	94
0.60	1332	355	1170	294	1012	225	725	139	531	99
0.70	1302	363	1140	303	978	233	683	146	483	103
0.80	1274	374	1109	312	942	240	642	153	434	108
0.90	1244	383	1079	320	906	248	602	158	383	113
1.00	1214	392	1047	329	869	256	562	163	345	117

ML193UH090XE48C PERFORMANCE (Less Filter)

External Static Pressure in. w.g.	Air Volume / Watts at Various Blower Speeds									
	High (Black)		Medium-High (Brown)		Medium (Blue)		Medium-Low (Yellow)		Low (Red)	
	cfm	Watts	cfm	Watts	cfm	Watts	cfm	Watts	cfm	Watts
0.00	1743	385	1534	267	1411	212	1328	181	1203	141
0.10	1705	394	1492	277	1369	222	1283	190	1155	149
0.20	1668	404	1451	287	1326	232	1239	199	1107	157
0.30	1633	415	1413	297	1285	241	1195	208	1062	166
0.40	1598	426	1372	306	1241	250	1150	216	1008	174
0.50	1561	437	1333	316	1198	258	1103	224	956	181
0.60	1526	447	1293	326	1152	268	1054	233	904	188
0.70	1491	458	1248	335	1107	276	1005	241	859	195
0.80	1454	469	1207	344	1061	285	966	249	820	202
0.90	1432	489	1166	353	1026	292	926	256	779	209
1.00	1335	469	1129	363	987	300	888	264	729	217

ML193UH110XE48C PERFORMANCE (Less Filter)

External Static Pressure in. w.g.	Air Volume / Watts at Various Blower Speeds									
	High (Black)		Medium-High (Brown)		Medium (Blue)		Medium-Low (Yellow)		Low (Red)	
	cfm	Watts	cfm	Watts	cfm	Watts	cfm	Watts	cfm	Watts
0.00	1783	351	1579	240	1445	196	1328	165	1232	126
0.10	1736	364	1519	249	1386	204	1287	174	1169	134
0.20	1689	377	1459	258	1327	212	1246	183	1106	142
0.30	1654	390	1429	273	1283	223	1198	191	1055	151
0.40	1607	401	1390	282	1252	232	1145	198	1003	159
0.50	1566	414	1344	290	1196	238	1088	206	944	165
0.60	1538	423	1291	298	1151	246	1045	217	889	174
0.70	1492	432	1248	307	1097	254	1000	224	843	182
0.80	1455	446	1210	316	1059	265	944	231	781	188
0.90	1415	455	1160	324	1010	273	894	239	717	197
1.00	1379	464	1124	336	953	281	841	247	655	204

ML193UH110XE60C PERFORMANCE (Less Filter)

External Static Pressure in. w.g.	Air Volume / Watts at Different Blower Speeds																			
	Bottom Return Air, Side Return Air with Return Air from Both Sides or Return Air from Bottom and One Side.										**Single Side Return Air** − Air volumes in **bold** (over 1800 cfm) require Optional Return Air Base and field fabricated transition to accommodate 20 x 25 x 1 in. air filter in order to maintain proper air velocity.									
	High (Black)		**Medium-High** (Brown)		**Medium** (Blue)		**Medium-Low** (Yellow)		**Low** (Red)		**High** (Black)		**Medium-High** (Brown)		**Medium** (Blue)		**Medium-Low** (Yellow)		**Low** (Red)	
	cfm	**Watts**	**cfm**	**Watts**	**cfm**	**Watts**	**cfm**	**Watts**	**cfm**	**Watts**	**cfm**	**Watts**	**cfm**	**Watts**	**cfm**	**Watts**	**cfm**	**Watts**	**cfm**	**Watts**
0.00	2142	574	1881	406	1740	313	1630	268	1455	196	2105	568	1874	404	1717	312	1599	262	1429	197
0.10	2095	585	1850	417	1691	326	1576	277	1405	206	2070	588	1838	418	1671	325	1563	276	1382	207
0.20	2048	597	1820	429	1642	340	1523	286	1355	216	2034	608	1802	432	1625	338	1527	289	1336	217
0.30	2019	617	1774	446	1600	352	1479	297	1299	225	1998	624	1760	448	1583	350	1473	302	1288	227
0.40	1991	631	1727	456	1566	364	1427	309	1250	235	1959	636	1711	459	1538	363	1434	312	1245	237
0.50	1942	647	1692	469	1518	376	1398	321	1200	245	1924	653	1675	471	1482	371	1386	323	1188	247
0.60	1903	658	1655	483	1473	387	1350	332	1151	255	1899	669	1639	484	1448	384	1343	334	1139	253
0.70	1868	673	1609	493	1431	398	1307	341	1106	264	1851	682	1592	493	1409	398	1302	345	1089	262
0.80	1840	687	1569	505	1386	407	1270	353	1055	275	1812	695	1557	509	1368	407	1262	355	1042	272
0.90	1796	703	1539	519	1335	419	1223	363	1006	283	1772	706	1519	521	1327	419	1217	365	996	283
1.00	1767	719	1491	528	1299	428	1182	372	938	291	1741	724	1472	529	1284	430	1166	375	945	292

REVISIONS

Sections	Description of Change
Approvals	Removed ENERGY STAR® usage.

Visit us at www.lennox.com
For the latest technical information, www.LennoxPros.com
Contact us at 1-800-9-LENNOX

NOTE - Due to Lennox' ongoing commitment to quality, Specifications, Ratings and Dimensions subject to change without notice and without incurring liability.
Improper installation, adjustment, alteration, service or maintenance can cause property damage or personal injury.
Installation and service must be performed by a qualified installer and servicing agency.

©2026 Lennox Industries, Inc.