8X10

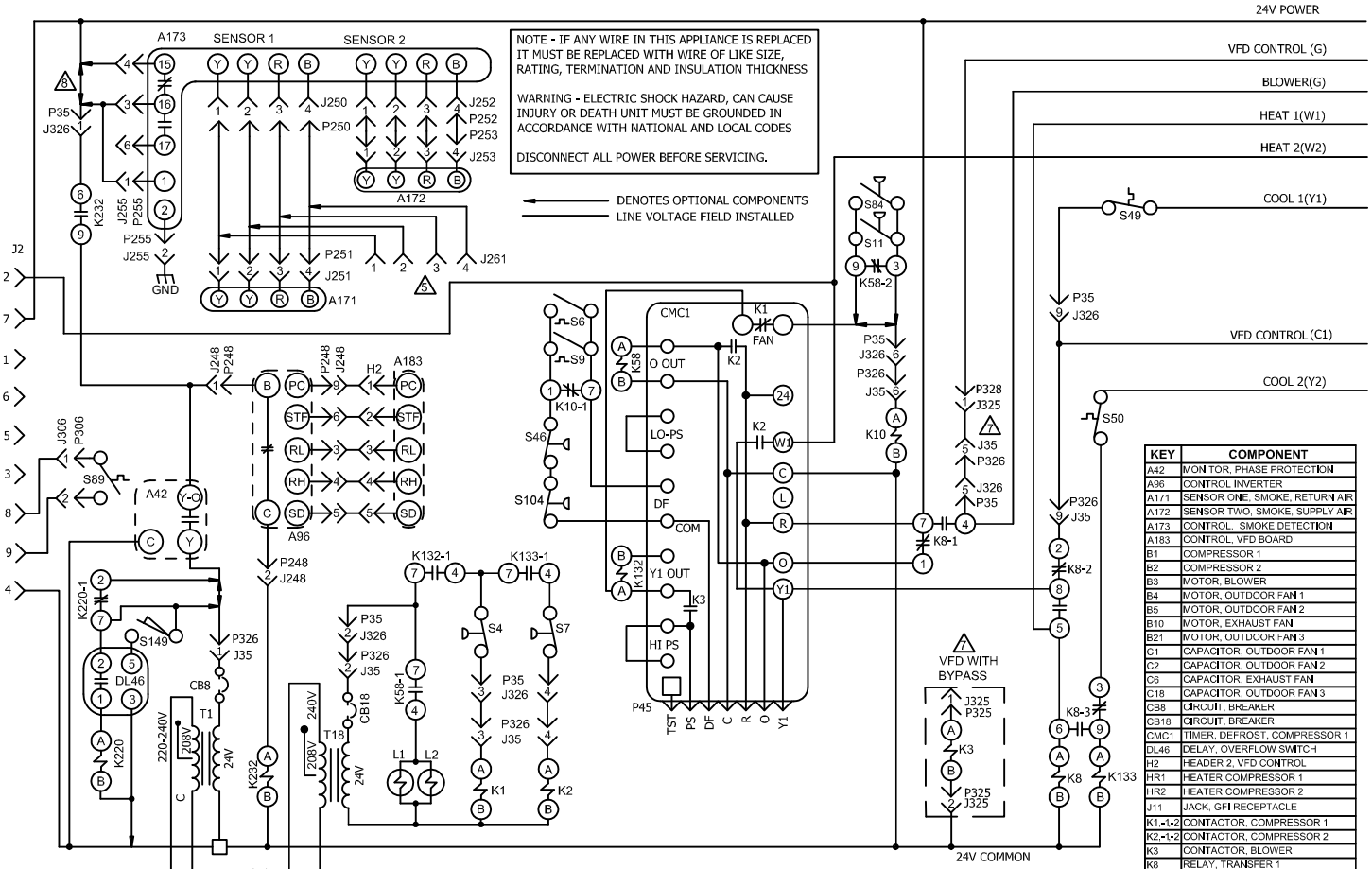

NOTE - IF ANY WIRE IN THIS APPLIANCE IS REPLACED IT MUST BE REPLACED WITH WIRE OF LIKE SIZE, RATING, TERMINATION AND INSULATION THICKNESS

WARNING - ELECTRIC SHOCK HAZARD, CAN CAUSE INJURY OR DEATH UNIT MUST BE GROUNDED IN ACCORDANCE WITH NATIONAL AND LOCAL CODES

DISCONNECT ALL POWER BEFORE SERVICING.

DENOTES OPTIONAL COMPONENTS
LINE VOLTAGE FIELD INSTALLED

KEY	COMPONENT
A42	MONITOR, PHASE PROTECTION
A96	CONTROL INVERTER
A171	SENSOR ONE, SMOKE, RETURN AIR
A172	SENSOR TWO, SMOKE, SUPPLY AIR
A173	CONTROL, SMOKE DETECTION
A183	CONTROL, VFD BOARD
B1	COMPRESSOR 1
B2	COMPRESSOR 2
B3	MOTOR, BLOWER
B4	MOTOR, OUTDOOR FAN 1
B5	MOTOR, OUTDOOR FAN 2
B10	MOTOR, EXHAUST FAN
B21	MOTOR, OUTDOOR FAN 3
C1	CAPACITOR, OUTDOOR FAN 1
C2	CAPACITOR, OUTDOOR FAN 2
C6	CAPACITOR, EXHAUST FAN
C18	CAPACITOR, OUTDOOR FAN 3
CB8	CIRCUIT, BREAKER
CB18	CIRCUIT, BREAKER
CMC1	TIMER, DEFROST, COMPRESSOR 1
DL46	DELAY, OVERFLOW SWITCH
H2	HEADER 2, VFD CONTROL
HR1	HEATER COMPRESSOR 1
HR2	HEATER COMPRESSOR 2
J11	JACK, GFI RECEPTACLE
K1,-1-2	CONTACTOR, COMPRESSOR 1
K2,-1-2	CONTACTOR, COMPRESSOR 2
K3	CONTACTOR, BLOWER
K8	RELAY, TRANSFER 1
K10	RELAY, OUTDOOR FAN 1
K58	RELAY, LOW AMBIENT KIT
K65	RELAY, EXHAUST FAN
K132	RELAY, COMPRESSOR 1 ON
K133	RELAY, COMPRESSOR 2 ON
K220	RELAY, OVERFLOW SWITCH
K232	RELAY, INVERTER PROTECTION
L1	VALVE, REVERSING 1
L2	VALVE, REVERSING 2
S4	SWITCH, LIMIT HI PRESS COMP 1
S6	SWITCH, DEFROST COMPRESSOR 1
S7	SWITCH, LIMIT HI PRESS COMP 2
S9	SWITCH, DEFROST COMPRESSOR 2
S11	SWITCH, LOW PRESS, LOW AMBIENT KIT
S42	SWITCH, OVERLOAD RELAY BLOWER MOTOR
S46	SWITCH, DEFROST TERMINATION
S49	SWITCH, FREEZESTAT
S50	SWITCH, FREEZESTAT 2
S84	SWITCH, LO PRESS, LO AMB COMP 2
S89	SWITCH, THERMOSTAT DISCHARGE TEMP
S104	SWITCH, DEFROST TERMINATION 2
S149	SWITCH, OVERFLOW
T1	TRANSFORMER, CONTROL
T18	TRANSFORMER, CONTACTOR

J/P	JACK/PLUG DESCRIPTION
2	HEAT
18	EXHAUST FAN COMPT
35	TEST HEAT
36	TEST COOL
45	INPUT
86	OUTDOOR FANS 1
132	EXHAUST FAN MOTOR 1
246	POWER TO VFD
247	POWER VFD TO MOTOR
248	VFD CONTROL
249	CONTACTOR BYPASS
250	SMOKE DETECTOR ONE
251	SMOKE DETECTOR ONE
252	SMOKE DETECTOR TWO
253	SMOKE DETECTOR TWO
255	MODULE,CONTROL SMOKE DETECT
261	SMOKE DETECTOR JUMPER
306	S89 THERMOSTAT
325	K3 OR VFD CONTROL
326	VFD CONTROL ADD-ON

1. NOTE - FOR USE WITH COPPER CONDUCTORS ONLY REFER TO UNIT RATING PLATE FOR MINIMUM CIRCUIT AMPACITY AND MAXIMUM OVERCURRENT PROTECTION SIZE.
2. B21 AND C18 ARE USED ON -150 UNITS ONLY
3. IMPORTANT: TO PREVENT MOTOR BURNOUT, NEVER CONNECT MORE THAN ONE MOTOR LEAD TO ANY ONE CONNECTION. TAPE UNUSED MOTOR LEADS
4. 120V FIELD PROVIDED POWER IS REQUIRED
5. CONNECT A172 SENSOR TO J261 ON SUPPLY AIR SMOKE DETECTOR ONLY
6. K3 REPLACES TB13 WHEN A96 VFD BYPASS OPTION IS INSTALLED
7. TO BYPASS A96 VFD:
   DISCONNECT POWER SUPPLY
   UNPLUG P246 FROM J246; UNPLUG P247 FROM J247; PLUG P247 INTO J249
   UNPLUG P328 FROM J325; PLUG P325 INTO J325
   UNPLUG P326 FROM J35;
   UNPLUG P35 FROM J326; PLUG P35 INTO J35
8. FOR EXTERNAL 24V SUPPLY SEE SECTION F4 DIAGRAM

2018/09	WIRING DIAGRAM 537426-04	18/09
COOLING		
KHA - 092,102,120,150 - G,J,Y - VFD UNITS		
SECTION B		REV. 0
Supersedes 537426-03	New Form No. 537426-04	