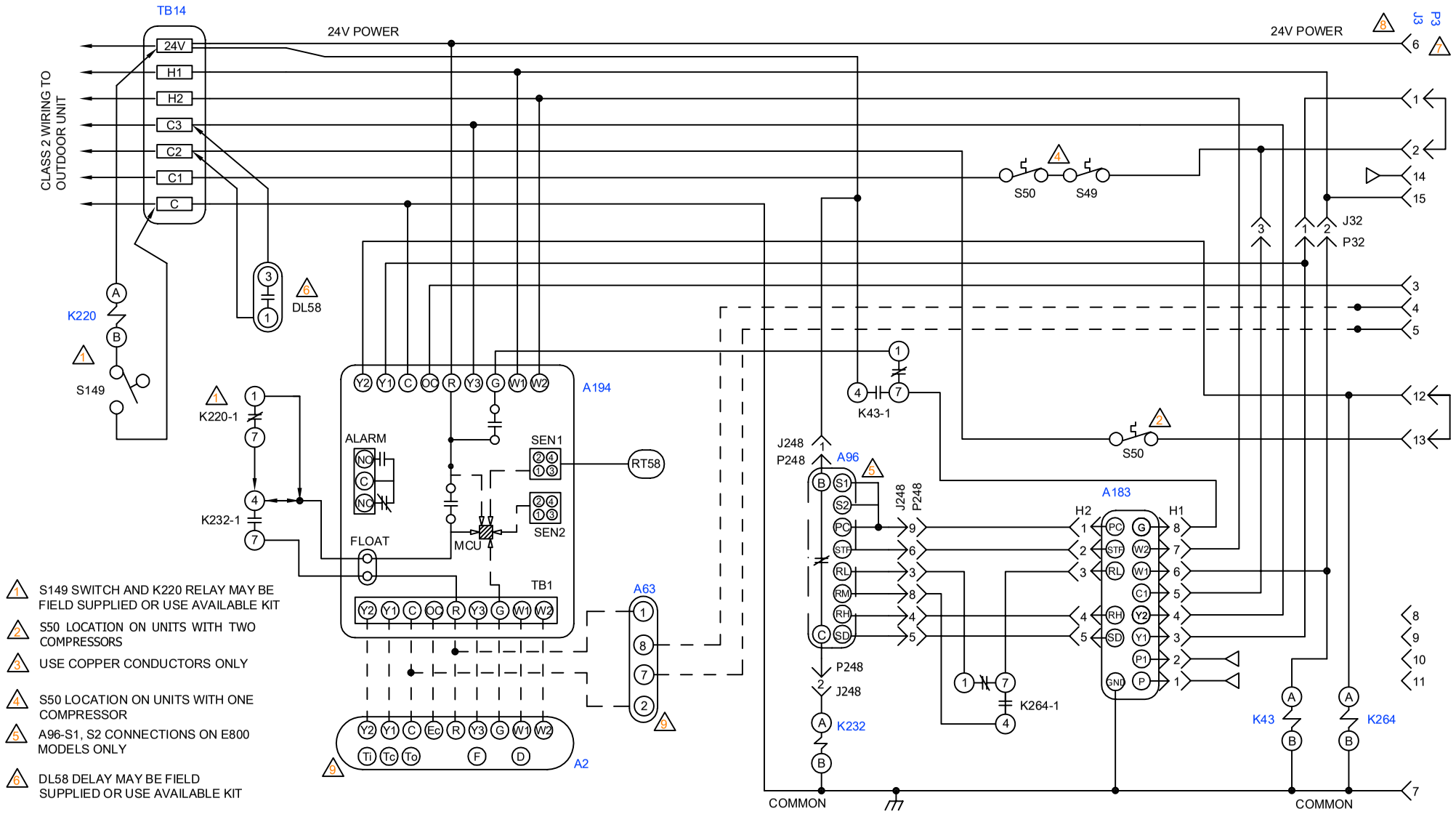

1. S149 SWITCH AND K220 RELAY MAY BE FIELD SUPPLIED OR USE AVAILABLE KIT
2. S50 LOCATION ON UNITS WITH TWO COMPRESSORS
3. USE COPPER CONDUCTORS ONLY
4. S50 LOCATION ON UNITS WITH ONE COMPRESSOR
5. A96-S1, S2 CONNECTIONS ON E800 MODELS ONLY
6. DL58 DELAY MAY BE FIELD SUPPLIED OR USE AVAILABLE KIT

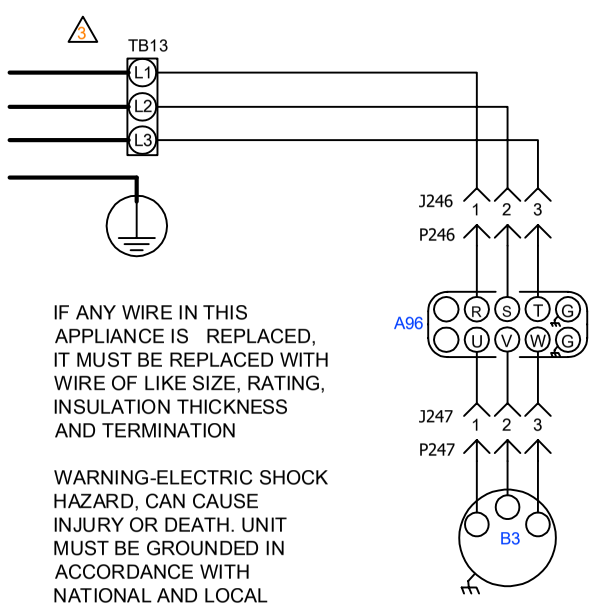

IF ANY WIRE IN THIS APPLIANCE IS REPLACED, IT MUST BE REPLACED WITH WIRE OF LIKE SIZE, RATING, INSULATION THICKNESS AND TERMINATION

WARNING-ELECTRIC SHOCK HAZARD, CAN CAUSE INJURY OR DEATH. UNIT MUST BE GROUNDED IN ACCORDANCE WITH NATIONAL AND LOCAL CODES

DISCONNECT ALL POWER BEFORE SERVICING

KEY	COMPONENT
A2	THERMOSTAT, CS7500 SERIES
A63	SENSOR, CO2
A96	CONTROL, INVERTER
A183	CONTROL, VFD BOARD
A194	CONTROL, REFRIGERANT LEAK DET.
B3	MOTOR-BLOWER
DL58	DELAY, ADJUSTABLE, ON MAKE
K43,-1	RELAY-ECONOMIZER BLOWER
K220,-1	RELAY-OVERFLOW
K232,-1	RELAY-INVERTER PROTECTION
K264,-1	RELAY-A96 SIGNAL SWITCHING
J/P3	JACK/PLUG ECONOMIZER

KEY	COMPONENT
J/P32	JACK/PLUG ECONOMIZER ADAPTER
J/P246	JACK/PLUG POWER TO VFD
J/P247	JACK/PLUG VFD TO MTR
J/P248	JACK/PLUG VFD CONTROL
RT58	SENSOR-REFRIG. LEAK DETECTION 1
S49	SWITCH-FREEZESTAT COMPRESSOR 1
S50	SWITCH-FREEZESTAT COMPRESSOR 2
S149	SWITCH-OVERFLOW
TB1	TERMINAL STRIP, CLASS II VOLTAGE
TB13	TERMINAL BLOCK, POWER DISTRIBUTOR
TB14	TERMINAL STRIP, CLASS II VOLTAGE

DENOTES OPTIONAL COMPONENTS
CLASS II FIELD WIRING
LINE VOLTAGE FIELD INSTALLED

7. REMOVE P3 WHEN ECONOMIZER IS USED
8. J3 MAXIMUM LOAD 20VA 24VAC CLASS II
9. COMPONENT SUPPLIED BY USER

2024/07	WIRING DIAGRAM 538449-01	07/24
BLOWER		
ELITE AIR HANDLERS 072-240 - Y,G,J		
SECTION B		REV. 0
Supersedes	New Form No. 538449-01	