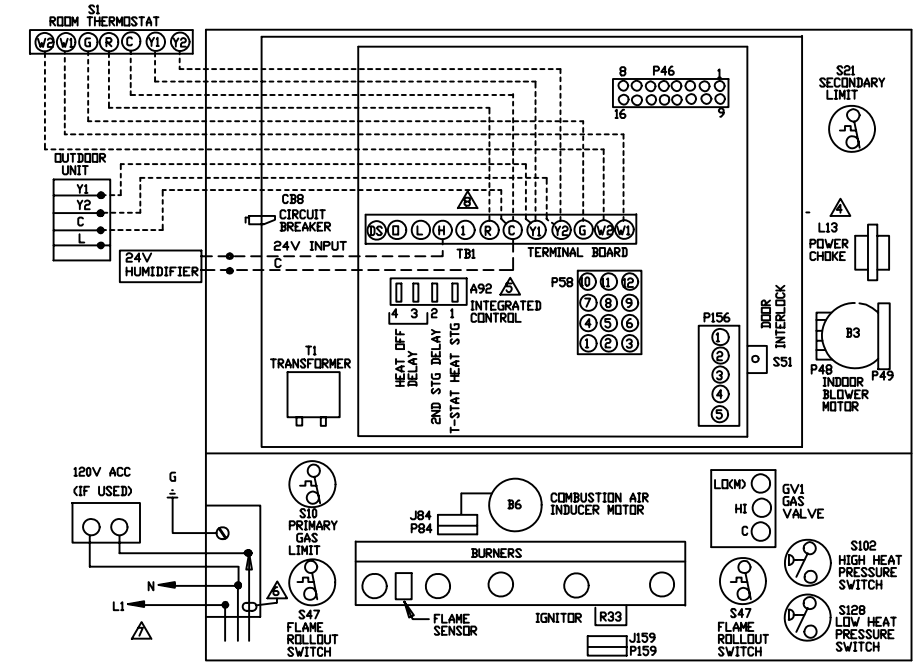

BLOWER SPEED CHART			
	FACTORY SHIPPED SETTINGS		
UNIT	HEAT	COOL	ADJUST
36A-070	2	4	NORM
36B-090	2	4	NORM
60C-090	2	4	NORM
60C-110	2	4	NORM
60D-135	2	4	NORM

NOTE: SEE INSTALLATION INSTRUCTIONS FOR PROCEDURE TO SET CORRECT BLOWER SPEED FOR SPECIFIC COOLING TONNAGE BEING APPLIED, AND HEATING TEMPERATURE RISE DESIRED.

TYPICAL SYSTEM SHOWN FOR 2 HEAT/2 COOL WITH CONVENTIONAL THERMOSTAT. SEE INSTALLATION INSTRUCTIONS FOR CONNECTIONS TO OTHER EQUIPMENT AND ACCESSORIES.

JACKPLUG CHART	
J,P46	JACK/PLUG-OUTPUT
J,P48	JACK/PLUG-MOTOR,VARIABLE SPEED
J,P49	JACK/PLUG-MOTOR,VARIABLE SPEED
J,P58	JACK/PLUG-BURNER CONTROL
J,P84	JACK/PLUG-COMB. AIR INDUCER
J,P135	JACK/PLUG-SECONDARY LIMIT
J,P156	JACK/PLUG-INDUCER
J,P159	JACK/PLUG-IGNITOR

THERMOSTAT HEAT ANTICIPATION SETTING

.65 AMP	HONEYWELL VALVE

1. CUT W914 JUMPER LABELED "DEHUM OR HARMONY" FROM DS TO R, AT A92 CONTROL BOARD WHEN USED WITH SIGNATURE STAT.
2. CUT W951 JUMPER FROM O TO R, LABELED "HEAT PUMP", AT A92 CONTROL BOARD, WHEN USED FOR DUAL FUEL APPLICATIONS.
3. JUMPER W915 FROM Y1 TO Y2 IS FACTORY INSTALLED AT A92 CONTROL BOARD. LEAVE IN FOR ONE STAGE COOL THERMOSTAT. CUT JUMPER Y1 TO Y2 FOR TWO STAGE COOL THERMOSTAT.
4. L13 USED ON 1HP ONLY
5. FACTORY DEFAULT IS FOR A 2 STAGE THERMOSTAT
6. FIELD SUPPLIED ACC WIRE
7. USE COPPER CONDUCTORS ONLY
8. #1 TERMINAL IS NOT USED

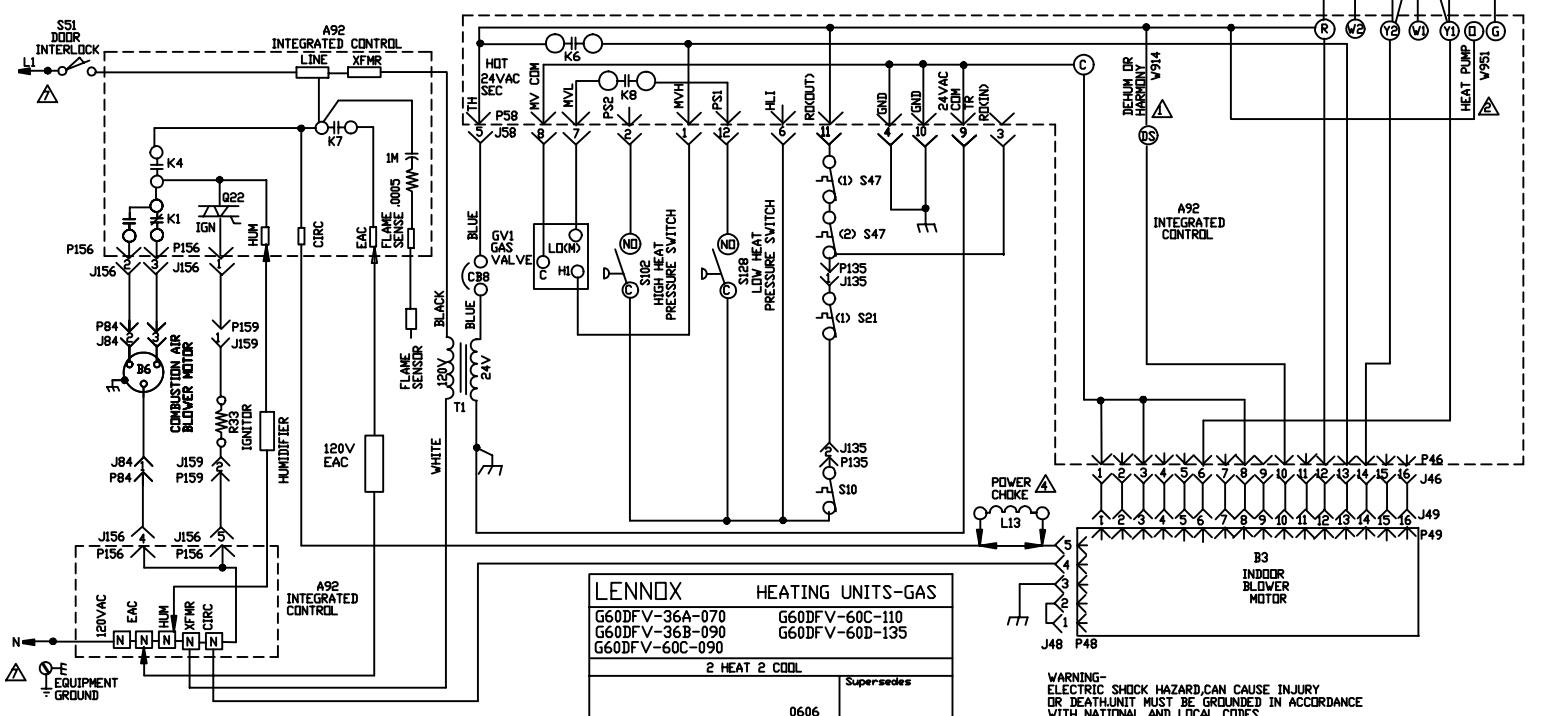

LENNOX HEATING UNITS-GAS

G60DFV-36A-070
G60DFV-36B-090
G60DFV-60C-090
G60DFV-60C-110
G60DFV-60D-135

2 HEAT 2 COOL

0606

Supersedes

New Form No. 535,294W

© 2006 Lennox Industries Inc.

Litho U.S.A.

WARNING-
ELECTRIC SHOCK HAZARD.CAN CAUSE INJURY OR DEATH.UNIT MUST BE GROUNDED IN ACCORDANCE WITH NATIONAL AND LOCAL CODES.

NOTE-
IF ANY WIRE IN THIS APPLIANCE IS REPLACED,IT MUST BE REPLACED WITH WIRE OF LIKE SIZE, RATING, INSULATION THICKNESS, AND TERMINATION