GAS FURNACES

ML196UHE

MERIT® SERIES

Upflow / Horizontal - Constant Torque Blower - 60Hz

RESIDENTIAL PRODUCT SPECIFICATIONS

Bulletin No. 210909
July 2026
Supersedes all previous versions

MERIT® SERIES

QUALIFIED ONLY IN

U.S. SOUTH: AL, AZ, AR, CA, DC, DE, FL, GA, HI, KY, LA, MD, MS, NV, NM, NC, OK, SC, TN, TX, VA

ENERGY STAR

AFUE - 96%
Input - 30,000 to 132,000 Btuh
Nominal Add-on Cooling - 1.5 to 5 Tons

MODEL NUMBER IDENTIFICATION

ML 1 96 UH 070 X E 36 B

Unit Type
ML = Merit® Series

Stages
1 = One-Stage

AFUE
96 = 96%

Configuration
UH = Upflow/Horizontal

Nominal Gas Heat Input
030 = 30,000 Btuh
045 = 44,000 Btuh
070 = 66,000 Btuh
090 = 88,000 Btuh
110 = 110,000 Btuh
135 = 132,000 Btuh

Low NOx
X = Units meet California Nitrogen Oxides Standard (40 ng/J)

Blower
E = High Efficiency Constant Torque Blower Motor

Nominal Add-On Cooling Capacity
36 = 1.5 - 3 tons
48 = 2.5 - 4 tons
60 = 3 - 5 tons

[1] Cabinet Width
B = 17-1/2 in.
C = 21 in.
D = 24-1/2 in.

[1] Indoor coils with the same letter designation physically matches the furnace.

FEATURE HIGHLIGHTS

1. Lennox Duralok Plus™ Heat Exchanger
2. Secondary Heat Exchanger
3. Inshot Burners
4. Gas Control Valve
5. Combustion Air Inducer
6. Flame Rollout Switch
7. SureLight® Integrated Furnace Control
8. Power Saver™ Constant Torque Blower
9. Insulated Cabinet
10. Safety Interlock Switch
11. Gas Piping And Electrical Inlets

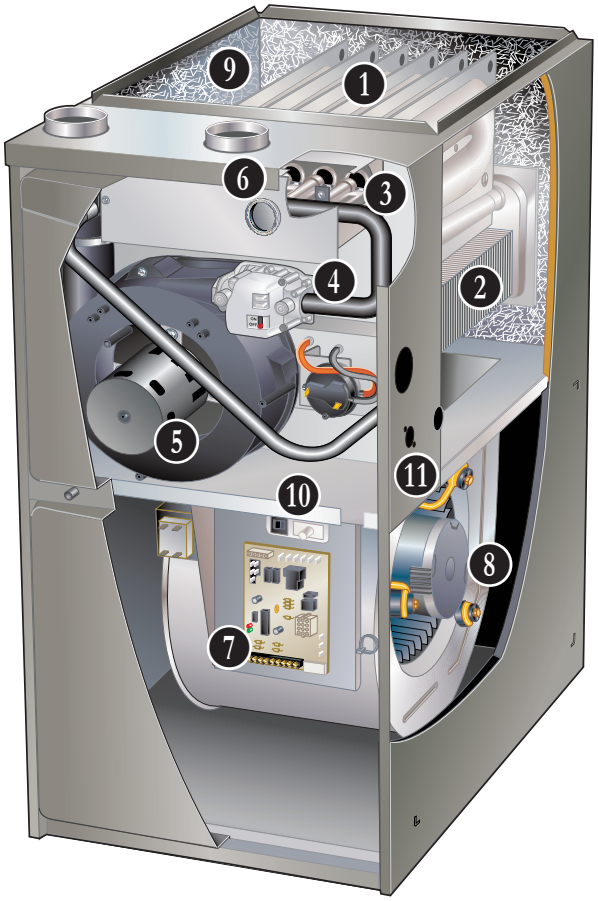

CONTENTS

Blower Data 24
Dimensions 17
- Furnace/Coil Combined. 20
- Optional Accessories 19
- Optional Accessories - Venting. 21
- Unit - Horizontal Position 18
- Unit - Upflow Position 17
Approvals And Warranty 3
Features 3
Gas Heat Accessories 11
High Altitude Derate 11
Installation Clearances 11
Model Number Identification. 1
Optional Accessories 10
Specifications 9
Vent Lengths 13
- Exhaust Or Intake 13
- Exhaust Using Ventilated Attic/Crawlspace Intake Air. 15
- Uninsulated Exhaust Pipe In Unconditioned Space 16

APPROVALS AND WARRANTY

APPROVALS

- AHRI Certified
- Tested and rated according to US DOE test procedures and FTC labeling regulations
- ENERGY STAR® units are certified only in the U.S. South in certain states and are designed to use less energy, help save money on utility bills, and help protect the environment
- ISO 9001 Registered Manufacturing Quality System
- Blower data from unit tests conducted in Lennox Laboratory air test chamber

NOTE - This furnace has not been CSA International design certified for installation in mobile homes, recreational vehicles, or outdoors.

California Only

- This furnace **does not meet** the South Coast Air Quality Management District (SCAQMD) Rule 1111 and San Joaquin Valley Air Pollution Control District (SJVAPCD) Rule 4905 NOx emission limit (14 ng/J) and cannot be installed within the SCAQMD, SJVAPCD and Bay Area
- Approved by the California Energy Commission and meets California Nitrogen Oxides Standard (NOx) limits of 40 ng/J

WARRANTY

- Duralok Plus™ Aluminized Steel Heat Exchanger:
  - Limited twenty year in residential applications
  - Limited ten years in non-residential applications
- All other covered components:
  - Limited five years in residential installations
  - Limited one year in non-residential installations

NOTE - Refer to Lennox® Basic Limited Warranty at www.Lennox.com for additional details.

FEATURES

APPLICATIONS

- Input capacities of 30,000, 44,000, 66,000, 88,000, 110,000 and 135,000 Btuh
- Energy efficiency (AFUE) - 96%
- Compact cabinet for upflow, horizontal-left or horizontal-right applications without any modifications
- Lennox add-on indoor coils, high-efficiency air cleaners and humidifiers can easily be added to furnace
- Shipped factory assembled with all controls installed and wired
- Factory test operated to ensure proper operation

HEATING SYSTEM

1 Lennox Duralok Plus™ Heat Exchanger Assembly

- Lennox developed heat exchanger assembly consists of primary heat exchanger and secondary condenser coil assembly
- Main multi-pass crimped seam design clamshell type
- Constructed of heavy-gauge, aluminized steel
- Designed for normal expansion and contraction with maximum efficiency and minimum resistance to air flow

2
- Secondary heat exchanger condenser coil constructed of aluminum fins fitted to stainless steel tubes
- Coil is factory tested for leaks
- Condensate drain header box assembly located on front of coil
- Compact size permits low overall design of furnace cabinet
- Laboratory life cycle tested in excess of industry standards

Lennox Designed Header Box

- Header box on end of condenser coil collects flue condensate for disposal through condensate drains
- Drains are located on each side of the cabinet for easy field installation of condensate drain trap
- Only one drain is used, the other drain is sealed
- Condensate drain trap is included with the unit for field installation

HEATING SYSTEM (continued)

Lennox Designed Flue Condensate Trap Assembly
- Field installed outside the conditioned air stream
- Assembly can be mounted on either side of cabinet in upflow applications
- Assembly is mounted below the cabinet in horizontal applications
- Can also be mounted remotely (up to 5 ft. away) from unit
- See Dimension Drawing and Installation Instructions
- 90° street elbow furnished for ease of drain trap installation
- Drain connection can be made with field provided PVC pipe or PVC coupling
- Drain cap on trap allows easy cleaning and winterizing

3 Inshot Burners
- Aluminized steel inshot burners provide efficient, trouble-free operation
- Burner venturi mixes air and gas in correct proportion for proper combustion
- Burner assembly can be removed from the unit as a single component for ease of service

SureLight® Hot Surface Ignitor
- Tough, reliable, long-life, trouble-free performance
- Silicon nitride ignitor
- Cemented to steatite block for protection against current leakage
- Ignition leads are constructed of nickel plated copper and are enclosed in high temperature Teflon® insulation for dependable operation

4 Gas Control Valve
- 24 volt redundant combination gas control valve combines manual shut off switch (On-Off), automatic electric valve (dual) and gas pressure regulation into a compact combination control

5 Combustion Air Inducer
- Shaded pole heavy duty blower prepurges heat exchanger and safely vents flue products
- Operates only during heating cycle

Pressure Switch
- Proves Combustion Air Inducer operation before allowing gas valve to open

Limit Control
- Primary limit is accurately located on header box on all units
- Automatic reset

6 Flame Rollout Switches (2)
- Factory installed on the front of the burner box
- Switch provides protection from abnormal operating conditions
- Manual reset

Optional Accessories

High Altitude Orifice Kits
- Required on all units for proper operation at altitudes from 7501 to 10,000 ft.
- Kits are available for natural gas and LPG/propane

High Altitude Pressure Switch Kit
- Required for proper unit operation on installations above 4500 ft.

Natural Gas to LPG/Propane Conversion Kit
- Required for field changeover from natural gas to LPG/Propane

LPG/Propane to Natural Gas Conversion Kit
- Required for field changeover from LPG/Propane to natural gas

Muffler (US Only)
- Significantly reduces outdoor operating sound levels
- Two-inch diameter muffler is optional for 030 through 110 input models

NOTE - Two-inch muffler is optional for the 110 input model with a maximum vent pipe length of up to 29 ft.
Three-inch diameter muffler is optional for 110 input model.

NOTE - Three-inch muffler is optional for the 110 input model with a minimum vent pipe length of 30 ft.

- Installed vertically in the exhaust piping
- See Optional Accessory Dimension Drawing

DIRECT VENT / NON-DIRECT VENT SEALED COMBUSTION SYSTEM

- Furnace features a “sealed combustion” system and can be installed in either Direct Vent or Non-Direct applications
- In Direct Vent applications, combustion air is supplied from outdoors and flue gases are discharged outdoors
- In Non-Direct Vent applications, combustion air is supplied from indoors and flue gases are discharged outdoors

NOTE - Lennox has approved the use of DuraVent® PolyPro® and Centrotherm InnoFlue® manufactured vent pipe and terminations as an alternative to PVC vent pipe. Must be ordered separately.
Tested and listed to the ULC S636 standard in Canada

- The polypropylene venting system must follow the uninsulated and unconditioned space vent lengths listed in the table on 16
- Refer to the Installation Instructions for additional details

DIRECT VENT / NON-DIRECT VENT SEALED COMBUSTION SYSTEM (continued)

Flue Coupling
- Assists with exhaust flue piping connection and servicing
- Includes flexible one 2-inch rubber coupling and two adjustable bands
- Approved for all Lennox 90% furnaces

Vent Termination Kits
- Facilitates installation of combustion air intake pipe and flue exhaust pipe
- Refer to venting table in this bulletin to determine pipe size needed and proper termination kit required
- See Optional Accessories table and dimension drawings

Concentric Termination Kit - Direct Vent Applications
- 2 or 3 inch kit contains concentric termination assembly, reducer bushing and 45° elbow
- 2 inch kit for -030-045-070 models contains an outdoor exhaust accelerator
- Kit requires single hole penetration of roof or wall for installation
- Roof Termination Flashing Kit is available for use with 2 inch Kits
- CSA certified

Flush-Mount Termination Kit
- Kit contains flush-mount termination, accelerator, mounting template and hardware
- Kit may be used with 2, 2-1/2 or 3 in. pipe

Wall Assembly Termination Kits

Close Couple (US Only) - Direct Vent Applications
- 2 or 3 inch kit consists of close-couple, side-by-side PVC piping with galvanized steel wall cover plate
- Seals and isolates intake and exhaust piping penetration of wall
- Piping spacing and length is sized for proper wall installations
- CSA certified

Close Couple WTK (Canada Only) - Direct Vent Applications
- 2 or 3 inch kit contains one insulated faceplate, one insulated exhaust pipe, elbow and fittings

NOTE - Maintain a maximum of 6 inches between the inlet and outlet openings in the installation of the pipes.

Roof Termination Flashing Kit
- For vertical venting through a roof
- 2 or 3 inch kit contains two neoprene rubber roof flashings
- Vent pipe and insulation not furnished
- Flashing Kit can also be used with Concentric Vent Termination Kits used in vertical venting rooftop applications

CONTROLS

7 SureLight® Integrated Furnace Control
- Contains all necessary controls and relays to operate furnace
- Combustion air inducer is operated by the integrated furnace control
- Prior to ignition, a pre-purge cycle for 15 seconds is initiated
- After the main burners are turned off, a post-purge cycle for 5 seconds is run
- Flame sensor assures safe and reliable operation
- Should loss of flame occur, the integrated furnace control will initiate 4 re-attempts at ignition before locking out unit operation for 60 minutes
- Watchguard type circuit automatically resets ignition controls after one hour of continuous thermostat demand after unit lockout, eliminating nuisance calls for service
- Fan control consists of adjustable blower timed-off delay (60, 90, 120, 180 seconds - factory setting 90 seconds) and fixed blower timed-on delay (30 seconds heating, 2 seconds cooling)
- For air-conditioning applications, blower is automatically energized on thermostat demand for cooling
- Two accessory terminals furnished for additional power supply requirements for 120 volt (less than 1 amp) power humidifiers and powered air cleaners
- One additional terminal is furnished for power supply requirements for 24V (less than 0.5 amp) low voltage accessories
- Ignition control has a single red LED to indicate status and as an aid in troubleshooting
- Last ten codes are stored in non-volatile memory (accessible by recall button on control) for servicing

24 Volt Transformer (40VA)
- Furnished and factory installed on outside of control box
- Circuit breaker (furnished) is wired in series

Field Wiring Make-Up Box
- Furnished for line voltage wiring
- Factory installed internally on left side of furnace
- Box may be installed internally on right side of furnace

CONTROLS (continued)

Optional Accessories

M30 Smart Wi-Fi Thermostat

- Wi-Fi-enabled, electronic 7-day, universal, multi-stage, programmable, touchscreen thermostat
- 4 Heat/2 Cool
- Auto-changeover
- Dual-fuel control with optional outdoor sensor
- Controls dehumidification during cooling mode and humidification during heating mode

- Offers enhanced capabilities including humidification / dehumidification / dewpoint measurement and control, Humiditrol® control, and equipment maintenance reminders
- Easy to read 4.3 in. color touchscreen (measured diagonally)
- LCD display with backlight shows the current and set temperature, time, inside relative humidity, system status (operating mode and schedules) and outside temperature (optional outdoor sensor required)
- Smooth Setback Recovery starts system early to achieve setpoint at start of program period
- Compressor short-cycle protection (5 minutes)
- Up to four separate schedules are available plus Schedule IQ™
- One-Touch Away Mode - A quick and easy way to set the cooling and heating setpoints while away
- Smart Away™ - Uses geo-fencing technology to determine when the homeowner is within a predetermined distance from the home to operate the system when leaving, away and arriving
- Wi-Fi remote monitoring and adjustment through a home wireless network for desktop PCs, laptops and apps for smartphones or tablets
- Smart home automation compatible with Amazon Alexa®, Google Assistant and IFTTT
- Service Dashboard features online real-time monitoring of installed Lennox® thermostats

NOTE - See the Lennox® M30 Smart Wi-Fi Thermostat Product Specifications bulletin in the Controls section for more information.

Remote Outdoor Temperature Sensor

- Used with the Lennox® M30 Smart Thermostat
- Outdoor sensor allows thermostat to display outdoor temperature

NOTE - Sensor is required for the Enhanced Dehumidification Accessory (EDA).

Thermostat

- Thermostat is not furnished with unit
- See Lennox Price Book for selection

Blower Relay Kit (For Use With Two-Stage Outdoor Units)

- Allows furnace blower speed changes when matched with two-stage air conditioners or heat pumps

Furnace Twinning Panel

- Required to operate two identical furnaces simultaneously from a single thermostat
- For single stage conventional (1 heat/1 cool), multi-stage conventional (2 heat/2 cool) and heat pump (3 heat/2 cool) equipment
- Can be used with common or separate ducted systems
- Contains PC Control Board with terminal strip connections for thermostat and HVAC equipment
- LEDs indicate system operating status
- Uses standard 18-gauge thermostat wire
- Power Supply: 24 VAC, 40VA (transformer not furnished)
- Mounting base with hardware furnished
- Dimensions (H x W x D): 10 x 5 x 2 in.

NOTE - Only identical furnaces should be twinned in order to ensure that both furnace blowers start at the same time. If furnaces are not identical, back draft dampers can be installed in either the supply or return duct.

Up to four identical furnaces can be twinned. Requires two panels that are wired together.

Furnace Twinning Kit

- Required to operate two furnaces simultaneously
- Kit consists of twinning relays, quick connect terminals and mounting hardware
- Used for single-stage heating/single-stage cooling with a single-stage thermostat

Transformer (75VA)

- Recommended when furnace is used with zoning or defrost thermostats and other 24V accessories requiring a higher VA rating
- Circuit breaker (furnished) is wired in series
- Replaces the standard 40VA transformer

FEATURES

BLOWER

- Direct drive blower
- Statically and dynamically balanced
- Resiliently mounted
- Blower assembly easily removed for servicing

8 Power Saver™ Constant Torque Blower Motor

- DC Brushless Motor
- High Efficiency Constant Torque
- ECM (Electronically Commutated Motor)
- Motor is programmed to provide constant torque at each of the selectable speeds
- Motor is controlled by the Integrated Furnace Control
- Blower speeds are easily changed on the integrated furnace control
- See Blower Data tables

CABINET

- Low-profile, narrow width allows easy installation
- Heavy-gauge, cold rolled steel construction
- Pre-painted cabinet finish
- Flanges provided on supply air opening for ease of plenum connection or alignment with indoor coil
- 9 Insulated with foil faced insulation on sides and back of heating compartment
- Sealed blower compartment
- Complete service access
- 10 Safety interlock switch automatically shuts off power to unit when blower compartment access door is remove
- 11 Gas piping and electrical inlets are provided in both sides of cabinet

Low Leakage Cabinet

- All models have less than 2% air leakage
- Meets ANSI/ASHRAE Standard 193-2010 "Method of Test for Determining the Air Tightness of HVAC Equipment"

Bottom/Side Return Air Entry:

- Upflow/horizontal with bottom return air entry:
  - Remove furnished bottom seal panel from cabinet
- Upflow only with side return-air entry:
  - Corners are marked on either side of cabinet for return air cut-out
- See dimension drawings

NOTE - 60C and 60D size units that require air volumes over 1800 cfm must have one of the following:

- Single side return air and Optional Return Air Base with transition that must accommodate required 20 x 25 x 1 inch air filter to maintain proper velocity
- Bottom return air
- Return air from both sides
- Bottom and one side return air
- See Blower Performance Tables for additional information

Coil Match-Up

- All furnaces exactly match Lennox cased upflow indoor coils and horizontal indoor coils with same letter designation (A, B, C, D) in model number
- No adaptor required
- Engaging holes furnished on cabinet for alignment
- Lennox uncased coils match furnaces without any overhang but require an optional adaptor base or field fabricated transition to match furnace opening
- See coil bulletin for additional information

Optional Accessories

Condensate Drain Heat Cable Kits

- Self-limiting wattage heat cable prevents condensate drain from freezing in unconditioned areas
- Available in 6 or 24 ft. lengths

Horizontal Suspension Kit

- Provides suspension of unit and indoor coil in horizontal applications
- Allows complete service access
- Consists of corner mounted hanging brackets with vibration isolators, return air end support rail and hardware for assembly
- Metal hanging straps must be field provided

Crawl Space Vent Drain Kit

- Allows venting through a crawl space for upflow and horizontal applications
- Includes 2 or 3 in. sanitary tee, 2 in. PVC assembly, PVC boot and clamp
- Kit for Canada is certified to ULC S636

Return Air Base

NOTE - On furnaces with side return air and condensate trap on the same side of the cabinet, a field fabricated transition or Return Air Base is required when using an IAQ product higher than 14-3/16 inches installed next to the unit and serviced from the front. IAQ products higher than 20 inches require a field fabricated transition.

NOTE - Must be used for 60C size models with air volumes over 1800 cfm in upflow applications when only one side return is required.

- Cabinet is shipped flat for easy field assembly
- Pre-painted steel to match the furnace
- See Dimension Drawing

CABINET (continued)

Optional Accessories (continued)

High Performance Economizer
(Commercial Applications Only)

- Designed for applications requiring outdoor air to be utilized in a commercial HVAC system
- Allows the entry of fresh outdoor air for free cooling, reducing the requirement for mechanical cooling
- Heavy gauge galvanized steel cabinet lined with thick fiberglass insulation
- Mixed air sensor, outdoor air sensor and 24VAC transformer furnished
- Approved for California Title 24 building standards
- ASHRAE 90.1-2010 compliant
- See separate Product Specifications bulletin for additional information and available control and sensor options.

FILTER (not furnished)

- Filter and provisions for external mounting must be field provided

Optional Accessories

Air Filter and Rack Kit for Horizontal Return Air (End) Applications

- Washable or vacuum cleanable polyurethane frame type filter and external end return air rack
- Rack has filter door for servicing
- Flanges on rack for duct connection
- Field installed
- See dimension drawing

Air Filter and Rack Kit for Upflow Side Return Air
NOTE - Not for use with Return Air Base

- Washable or vacuum cleanable polyurethane frame type filter and external side return air rack available for field installation
- Available in single and ten pack kits
- Rack has filter door for servicing
- Flanges on rack for duct connection
- Field installs on either side of unit cabinet
- See dimension drawing

REFRIGERATION DETECTION SYSTEM (RDS)

Optional Accessories

Refrigerant Detection System (RDS) Coil Sensor Kit

- Complies with UL 60335-2-40 approved standard
- Required for field installation for all systems using R-454B refrigerant if sensor is not furnished with coil
- Consists of Refrigerant Detection System (RDS) sensor, lineset sleeves, mounting brackets and A2L labeling
- Sensor ensures safe operation for systems equipped with R-454B refrigerant
- Sensor will detect anu R-454B refrigerant

Refrigerant Detection System (RDS) Blower Control Board

Communicating Blower Control Board (Universal)

- Communicating Blower Control Board and Sensor can be used universally with any Lennox® communicating furnace or any non-communicating 24 volt furnace

Non-Communicating Blower Control Board

- Non-Communicating Blower Control Board and Sensor can be used with any non-communicating 24 volt furnace

Standard Features

- Complies with UL 60335-2-40 approved standard
- Required for all systems using R-454B refrigerant
- Connects to the RDS sensor furnished with the RDS Coil Sensor Kit
- Supports up to two RDS Sensors (factory setting)
- Used as an interface between indoor unit and thermostat to control system
- Ensures safe operation for systems equipped with R-454B refrigerant
- If R-454B refrigerant is detected, the refrigerant detection system will stop compressor and/or heating operating and operate the blower to reduce concentrations in the conditioned space
- Once safe levels are reached the HVAC system will resume normal operation
- Multi-color LED for system status and as an aid in troubleshooting
  - Flashing LED codes for system status (Green/Blue) and diagnosing Sensor errors (Red)
- Alarm relay can trigger an external alarm if R-454B refrigerant is detected
- Zone relay opens all zone dampers (if part of a zoning system) if R-454B refrigerant is detected
- Power is disabled to non-communicating thermostats to prevent demand if R-454B refrigerant is detected
- On system start-up blower will run for five minutes and any thermostat demands are disabled
- Dimensions (H x W x D): 7-7/16 x 7-7/16 x 2-1/2 (189 x 189 x 127 mm)

NOTE - See Refrigerant Detection System (RDS) Components Table on page 11.

See the CK40 Indoor Coil Product Specifications bulletins for more information.

Refer to the Installation Instructions for additional information.

SPECIFICATIONS

	Model No.	ML196UH 030XE36B	ML196UH 045XE36B	ML196UH 070XE36B	ML196UH 070XE48B	ML196UH 090XE36C
Gas Heating Performance	[1] AFUE	96%	96%	96%	96%	96%
	Input - Btuh	30,000	44,000	66,000	66,000	88,000
	Output - Btuh	29,000	43,000	64,000	64,000	86,000
	Temperature rise range - °F	25 - 55	35 - 65	35 - 65	30 - 60	45 - 75
	Gas Manifold Pressure (in. w.g.) Nat. Gas / LPG/Propane	3.5 / 10	3.5 / 10	3.5 / 10	3.5 / 10	3.5 / 10
	High static - in. w.g.	0.5	0.5	0.5	0.5	0.5
Energy Star® Certified		Yes	Yes	Yes	Yes	Yes
Connections in.	Intake / Exhaust Pipe (PVC)	2 / 2	2 / 2	2 / 2	2 / 2	2 / 2
	Gas pipe size IPS	1/2	1/2	1/2	1/2	1/2
	Condensate Drain Trap (PVC pipe) - i.d.	3/4	3/4	3/4	3/4	3/4
	with furnished 90° street elbow	3/4 slip x 3/4 Mipt				
	with field supplied (PVC coupling) - o.d.	3/4 slip x 3/4 MPT				
Indoor Blower	Wheel nom. dia. x width - in.	10 x 8	10 x 8	10 x 8	11-1/2 x 10	10 x 8
	Motor Type	DC Brushless	DC Brushless	DC Brushless	DC Brushless	DC Brushless
	Motor output - hp	1/2	1/2	1/2	3/4	1/2
	Tons of add-on cooling	1.5 - 3	1.5 - 3	1.5 - 3	2.5 - 4	1.5 - 3
	Air Volume Range - cfm	175 - 1435	520 - 1345	550 - 1380	835 - 1855	460 - 1470
Electrical Data	Voltage	120 volts - 60 hertz - 1 phase				
	Blower motor full load amps	6.8	6.8	6.8	8.4	6.8
	Maximum overcurrent protection	15	15	15	15	15
Shipping Data	lbs. - 1 package	120	124	129	132	142

NOTE - Filters and provisions for mounting are not furnished and must be field provided.

[1] Annual Fuel Utilization Efficiency based on DOE test procedures and according to FTC labeling regulations. Isolated combustion system rating for non-weatherized furnaces.

SPECIFICATIONS

	Model No.	ML196UH 090XE48C	ML196UH 090XE60C	ML196UH 110XE60C	ML196UH 135XE60D
Gas Heating Performance	[1] AFUE	96%	96%	96%	96%
	Input - Btuh	88,000	88,000	110,000	132,000
	Output - Btuh	86,000	86,000	107,000	127,000
	Temperature rise range - °F	50 - 80	35 - 65	45 - 75	45 - 75
	Gas Manifold Pressure (in. w.g.) Nat. Gas / LPG/Propane	3.5 / 10	3.5 / 10	3.5 / 10	3.5 / 10
	High static - in. w.g.	0.5	0.5	0.5	0.5
Energy Star® Certified		Yes	Yes	Yes	Yes
Connections in.	Intake / Exhaust Pipe (PVC)	2 / 2	2 / 2	2 / 2	2 / 2
	Gas pipe size IPS	1/2	1/2	1/2	1/2
	Condensate Drain Trap (PVC pipe) - i.d.	3/4	3/4	3/4	3/4
	with furnished 90° street elbow	3/4 slip x 3/4 Mipt			
	with field supplied (PVC coupling) - o.d.	3/4 slip x 3/4 MPT			
Indoor Blower	Wheel nom. dia. x width - in.	10 x 10	11-1/2 x 10	11-1/2 x 10	11-1/2 x 10
	Motor Type	DC Brushless	DC Brushless	DC Brushless	DC Brushless
	Motor output - hp	3/4	1	1	1
	Tons of add-on cooling	2.5 - 4	3-5	3 - 5	3-5
	Air Volume Range - cfm	760 - 1740	1050 - 2105	1055 - 2220	1310 - 2400
Electrical Data	Voltage	120 volts - 60 hertz - 1 phase			
	Blower motor full load amps	8.4	10.9	10.9	10.9
	Maximum overcurrent protection	15	15	15	15
Shipping Data	lbs. - 1 package	152	152	164	174

NOTE - Filters and provisions for mounting are not furnished and must be field provided.

[1] Annual Fuel Utilization Efficiency based on DOE test procedures and according to FTC labeling regulations. Isolated combustion system rating for non-weatherized furnaces.

OPTIONAL ACCESSORIES

			"B" Width Models	"C" Width Models	"D" Width Models
CABINET ACCESSORIES					
Horizontal Suspension Kit - Horizontal only			**51W10**	**51W10**	**51W10**
Return Air Base - Upflow only			**50W98**	**50W99**	**50W99**
High Performance Economizer (Commercial Only)			**10U53**	**10U53**	**10U53**
CONDENSATE DRAIN KITS					
Condensate Drain Heat Cable		6 ft.	**26K68**	**26K68**	**26K68**
		24 ft.	**26K69**	**26K69**	**26K69**
Crawl Space Vent Drain Kit		US	**51W18**	**51W18**	**51W18**
		Canada	**15Z70**	**15Z70**	**15Z70**
CONTROLS					
Blower Relay Kit (for two-stage outdoor units)			**85W66**	**85W66**	**85W66**
M30 Smart Wi-Fi Thermostat			**15Z69**	**15Z69**	**15Z69**
Remote Outdoor Temperature Sensor			**X2658**	**X2658**	**X2658**
Furnace Twinning Panel			**Y3653**	**Y3653**	**Y3653**
Furnace Twinning Kit			**16W72**	**16W72**	**16W72**
Transformer (75VA)			**27J32**	**27J32**	**27J32**
FILTER KITS					
[1] Air Filter and Rack Kit	Horizontal (end)		**87L96**	**87L97**	**87L98**
		Size of filter - in.	18 x 25 x 1	20 x 25 x 1	25 x 25 x 1
	Side Return	Single	**44J22**	**44J22**	**44J22**
		Ten Pack	**66K63**	**66K63**	**66K63**
		Size of filter - in.	16 x 25 x 1	16 x 25 x 1	16 x 25 x 1
TERMINATION KITS					
See Installation Instructions for specific venting information.					
Direct Vent	Concentric	US - 2 in.	**71M80**	**69M29**	**- - -**
		3 in.	**- - -**	**60L46**	**60L46**
		Canada - 2 in.	**44W92**	**44W92**	**- - -**
		3 in.	**- - -**	**44W93**	**44W93**
	Flush-Mount	US - 2, 2-1/2 or 3 in.	**51W11**	**51W11**	**51W11**
		Canada - 2, 2-1/2 or 3 in.	**51W12**	**51W12**	**51W12**
	Wall - Close Couple	US - 2 in.	**22G44**	**- - -**	**- - -**
		3 in.	**44J40**	**44J40**	**44J40**
	Wall - Close Couple WTK	Canada - 2 in.	**30G28**	**- - -**	**- - -**
		3 in.	**81J20**	**81J20**	**81J20**
	Roof Termination Flashing Kit (no vent pipe - 2 flashings)	2 in.	**15F75**	**15F75**	**- - -**
		3 in.	**44J41**	**44J41**	**44J41**
VENTING					
Flue Coupling		2 in.	**17H92**	**17H92**	**17H92**

[1] Cleanable polyurethane frame type filter.

NOTE - Termination Kits (**44W92**, **44W93**, **30G28**, **51W12**, **81J20**) and Crawl Space Vent Drain Kit (**15Z70**) are certified to ULC S636 standard for use in Canada only.

GAS HEAT ACCESSORIES

Input	High Altitude Pressure Switch Kit		Natural Gas to LPG/Propane Kit	LPG/Propane to Natural Gas Kit	Natural Gas High Altitude Orifice Kit	LPG/Propane High Altitude Orifice Kit	Muffler (US Only)
	4501 - 7500 ft.	7501 - 10,000 ft.	0 - 7500 ft.	0 - 7500 ft.	7501 - 10,000 ft.	7501 - 10,000 ft.	
030	11U66	11U69	17H63	N/A	14C90	17H66	15Y66 (2-inch)
045	11U66	11U69	11K49	73W81	73W37	11K44	15Y66 (2-inch)
070	11U70	11U68	11K49	73W81	73W37	11K44	15Y66 (2-inch)
090	11U70	11U64	11K49	73W81	73W37	11K44	15Y66 (2-inch)
110	11U70	11U64	11K49	73W81	73W37	11K44	[1] 15Y66 (2-inch) 16A56 (3-inch)
135	11U70	11U68	11K49	73W81	73W37	11K44	16A56 (3-inch)

[1] Two-inch diameter muffler (**15Y66**) is optional for 110 input model with a maximum vent pipe length of up to 29 ft.
Three-inch diameter muffler (**16A56**) is optional for 110 input model with a minimum vent pipe length of 30 ft.

REFRIGERANT DETECTION SYSTEM (RDS) COMPONENTS

Description		Order No.
Refrigerant Detection System (RDS) Coil Sensor Kit		**26Z69**
Refrigerant Detection System (RDS) Blower Control Board	Any Lennox® Communicating Furnace or any Non-Communicating 24V Furnace (Universal)	**27A03**
	Any Non-Communicating 24V Furnace	**27A02**

NOTE - Communicating Blower Control Board and Sensor can be used universally with Lennox® communicating furnace or any non-communicating 24 volt furnace.
Non-Communicating Blower Control Board and Sensor can be used with any non-communicating 24 volt furnace.

HIGH ALTITUDE DERATE

NOTE - Units may be installed at altitudes up to 10,000 ft.
At altitudes above 4501 ft. the unit must be derated to match the manifold pressure information shown below.
Units installed at altitudes of 4501 to 10,000 ft. require a pressure switch change.
Units installed at altitudes of 7501 to 10,000 ft. require an orifice change.
See the Gas Heat Accessories table for ordering information.

NOTE - This is the only permissible derate for these units.

NOTE - In Canada, certification for installations at elevations over 4500 feet is the jurisdiction of local authorities.

Input	Gas	Manifold Pressure in. w.g.					Supply Line Pressure in. w.g.	
		0 - 4500 ft.	4501 - 5500 ft.	5501 - 6500 ft.	6501 - 7500 ft.	7501 - 10,000 ft.	0 - 10,000 ft.	
All Sizes	Natural	3.5	3.3	3.2	3.1	3.5	4.5	13.0
	LPG/Propane	10.0	9.4	9.1	8.9	10.0	11.0	13.0

INSTALLATION CLEARANCES

Sides	[1] 0 inches (0 mm)
Rear	0 inches (0 mm)
Top/Plenum	1 inch (25 mm)
Front	0 inches (0 mm)
Front (service/alcove)	24 inches (610 mm)
Floor	[2] Combustible

NOTE − Air for combustion must conform to the methods outlined in the National Fuel Gas Code (NFPA 54/ANSI−Z223.1) or the National Standard of Canada CAN/CSA−B149.1 Natural Gas and Propane Installation Code".

NOTE − In the U.S. flue sizing must conform to the methods outlined in the current National Fuel Gas Code (NFPA 54/ANSI−Z223.1) or applicable provisions of local building codes. In Canada flue sizing must conform to the methods outlined in National Standard of Canada CAN/CSA−B149.1.

[1] Allow proper clearances to accommodate condensate trap and vent pipe installation.

[2] Do not install the furnace directly on carpeting, tile, or other combustible materials other than wood flooring.

OUTDOOR TERMINATION KIT USAGE

Input Size	Vent Pipe Diameter (in.)	Standard Terminations				Concentric Terminations		
		Flush Mount Kit	Wall Kit		Field Fabricated Exhaust Accelerator Size Required	Concentric Kit		
			2 inch	3 inch		1-1/2 inch	2 inch	3 inch
		51W11 (US) [5] 51W12 (CA)	22G44 (US) [5] 30G28 (CA)	44J40 (US) [5] 81J20 (CA)		71M80 (US) [5] 44W92 (CA)	69M29 (US) [5] 44W92 (CA)	60L46 (US) [5] 44W93 (CA)
030/045	[1] 1-1/2	[4] YES	YES	[2] YES	1-1/2 in.	[3] YES	- - -	- - -
	2	[4] YES	YES	[2] YES	1-1/2 in.	[3] YES	- - -	- - -
	2-1/2	[4] YES	YES	[2] YES	1-1/2 in.	[3] YES	- - -	- - -
	3	[4] YES	YES	[2] YES	1-1/2 in.	[3] YES	- - -	- - -
070	[1] 1-1/2	[4] YES	YES	[2] YES	1-1/2 in.	[3] YES	- - -	- - -
	2	[4] YES	YES	[2] YES	1-1/2 in.	[3] YES	- - -	- - -
	2-1/2	[4] YES	YES	[2] YES	1-1/2 in.	[3] YES	- - -	- - -
	3	[4] YES	YES	[2] YES	1-1/2 in.	[3] YES	- - -	- - -
090	2	[4] YES	- - -	YES	2 in.	- - -	YES	YES
	2-1/2	[4] YES	- - -	YES	2 in.	- - -	YES	YES
	3	[4] YES	- - -	YES	2 in.	- - -	YES	YES
110	2	YES	- - -	YES	2 in.	- - -	YES	YES
	2-1/2	YES	- - -	YES	2 in.	- - -	YES	YES
	3	YES	- - -	YES	2 in.	- - -	YES	YES
135	3	YES	- - -	YES	2 in.	- - -	- - -	YES

NOTE - Standard Terminations do not include any vent pipe or elbows external to the structure.
Any vent pipe or elbows external to the structure must be included in total vent length calculations. See Vent Length Tables.

[1] 2 inch to 1-1/2 inch reducer required, must be field provided.

[2] Requires field provided 1-1/2 in. outdoor exhaust accelerator.

[3] Concentric Kits **71M80** and **44W92** include 1-1/2 in. outdoor exhaust accelerator, required when used with 030, 045 and 070 input models. Accelerator is not used with 090 or 110 input models. When using 1-1/2 in. piping, the pipe must be transitioned to 2 in. pipe when used with the Concentric Kit.

[4] Flush Mount Kit **51W11** and **51W12** includes 1-1/2 in. outdoor exhaust accelerator, required when used with 030, 045, 070 and 090 input models. Accelerator is not used with 110 input models. When using 1-1/2 in. piping, the pipe must be transitioned to 2 in. pipe when used with the Flush Mount Kit.

[5] Termination Kits **30G28**, **44W92**, **44W93**, **51W12** and **81J20** are certified to ULC S636 standard for use in Canada only.

STANDARD TERMINATION AT 0 - 2000 ft. ELEVATION

Pipe Size		1-1/2 in.						2 in.					2-1/2 in.					3 in.				
Input		030	045	070	090	110	135	030/045	070	090	110	135	030/045	070	090	110	135	030/045	070	090	110	135
No. of 90 ELL	1	25	20	15	N/A	N/A	N/A	81	66	44	24	N/A	115	115	93	58	N/A	138	137	118	118	80
	2	20	15	10	N/A	N/A	N/A	76	61	39	19	N/A	110	110	88	53	N/A	133	132	113	113	75
	3	15	10	N/A	N/A	N/A	N/A	71	56	34	14	N/A	105	105	83	48	N/A	128	127	108	108	70
	4	10	N/A	N/A	N/A	N/A	N/A	66	51	29	N/A	N/A	100	100	78	43	N/A	123	122	103	103	65
	5	N/A	N/A	N/A	N/A	N/A	N/A	61	46	24	N/A	N/A	95	95	73	38	N/A	118	117	98	98	60
	6	N/A	N/A	N/A	N/A	N/A	N/A	56	41	19	N/A	N/A	90	90	68	33	N/A	113	112	93	93	55
	7	N/A	N/A	N/A	N/A	N/A	N/A	51	36	14	N/A	N/A	85	85	63	28	N/A	108	107	88	88	50
	8	N/A	N/A	N/A	N/A	N/A	N/A	46	31	N/A	N/A	N/A	80	80	58	23	N/A	103	102	83	83	45
	9	N/A	N/A	N/A	N/A	N/A	N/A	41	26	N/A	N/A	N/A	75	75	53	18	N/A	98	97	78	78	40
	10	N/A	N/A	N/A	N/A	N/A	N/A	36	21	N/A	N/A	N/A	70	70	48	13	N/A	93	92	73	73	35

NOTES - Additional vent pipe and long radius elbows (required) used to terminate vent pipe outside the structure must be included in the total vent length calculation.
Intake and exhaust pipes are sized separately.
Values in table are for separate intake or exhaust pipe lengths.
Both intake and exhaust pipe must be the same size diameter.

STANDARD TERMINATION AT 2001 - 10,000 ft. ELEVATION

Pipe Size		1-1/2 in.	2 in.								
Input		030	030/045	070			090			110	135
Elevation		- - -	2001-10,000 ft.	2001-3000 ft.	3001-4000 ft.	4001-10,000 ft.	2001-3000 ft.	3001-4000 ft.	4001-10,000 ft.	2001-10,000 ft.	
No. of 90 ELL	1	N/A	81	55	45	35	30	25	20	N/A	N/A
	2		76	50	40	30	25	20	15	N/A	N/A
	3		71	45	35	25	20	15	10	N/A	N/A
	4		66	40	30	20	15	10	N/A	N/A	N/A
	5		61	35	25	15	10	N/A	N/A	N/A	N/A
	6		56	30	20	10	N/A	N/A	N/A	N/A	N/A
	7		51	25	15	N/A	N/A	N/A	N/A	N/A	N/A
	8		46	20	10	N/A	N/A	N/A	N/A	N/A	N/A
	9		41	15	N/A	N/A	N/A	N/A	N/A	N/A	N/A
	10		36	10	N/A	N/A	N/A	N/A	N/A	N/A	N/A

Pipe Size		2-1/2 in.					3 in.				
Input		030/045	070	090	110	135	030/045	070	090	110	135
Elevation		2001-10,000 ft.					2001-10,000 ft.				
No. of 90 ELL	1	115	110	67	53	N/A	138	137	118	118	80
	2	110	105	62	48	N/A	133	132	113	113	75
	3	105	100	57	43	N/A	128	127	108	108	70
	4	100	95	52	38	N/A	123	122	103	103	65
	5	95	90	47	33	N/A	118	117	98	98	60
	6	90	85	42	28	N/A	113	112	93	93	55
	7	85	80	37	23	N/A	108	107	88	88	50
	8	80	75	32	18	N/A	103	102	83	83	45
	9	75	70	27	13	N/A	98	97	78	78	40
	10	70	65	22	N/A	N/A	93	92	73	73	35

NOTES - Additional vent pipe and long radius elbows (required) used to terminate vent pipe outside the structure must be included in the total vent length calculation.
Intake and exhaust pipes are sized separately.
Values in table are for separate intake or exhaust pipe lengths.
Both intake and exhaust pipe must be the same size diameter.

CONCENTRIC TERMINATION AT 0 - 2000 ft. ELEVATION

Pipe Size		1-1/2 in.						2 in.					2-1/2 in.					3 in.				
Input		030	045	070	090	110	135	030/045	070	090	110	135	030/045	070	090	110	135	030/045	070	090	110	135
No. of 90 ELL	1	20	15	10	N/A	N/A	N/A	73	58	42	22	N/A	105	105	89	54	N/A	121	121	114	114	70
	2	15	10	N/A	N/A	N/A	N/A	68	53	37	17	N/A	100	100	84	49	N/A	116	116	109	109	65
	3	10	N/A	N/A	N/A	N/A	N/A	63	48	32	12	N/A	95	95	79	44	N/A	111	111	104	104	60
	4	N/A	N/A	N/A	N/A	N/A	N/A	58	43	27	N/A	N/A	90	90	74	39	N/A	106	106	99	99	55
	5	N/A	N/A	N/A	N/A	N/A	N/A	53	38	22	N/A	N/A	85	85	69	34	N/A	101	101	94	94	50
	6	N/A	N/A	N/A	N/A	N/A	N/A	48	33	17	N/A	N/A	80	80	64	29	N/A	96	96	89	89	45
	7	N/A	N/A	N/A	N/A	N/A	N/A	43	28	12	N/A	N/A	75	75	59	24	N/A	91	91	84	84	40
	8	N/A	N/A	N/A	N/A	N/A	N/A	38	23	N/A	N/A	N/A	70	70	54	19	N/A	86	86	79	79	35
	9	N/A	N/A	N/A	N/A	N/A	N/A	33	18	N/A	N/A	N/A	65	65	49	14	N/A	81	81	74	74	30
	10	N/A	N/A	N/A	N/A	N/A	N/A	28	13	N/A	N/A	N/A	60	60	44	N/A	N/A	76	76	69	69	25

NOTES - Additional vent pipe and long radius elbows (required) used to terminate vent pipe outside the structure must be included in the total vent length calculation.
Intake and exhaust pipes are sized separately.
Values in table are for separate intake or exhaust pipe lengths.
Both intake and exhaust pipe must be the same size diameter.

CONCENTRIC TERMINATION AT 2001 - 10,000 ft. ELEVATION

Pipe Size		1-1/2 in.	2 in.								
Input		030	030/045	070			090			110	135
Elevation		- - -	2001-10,000 ft.	2001-3000 ft.	3001-4000 ft.	4001-10,000 ft.	2001-3000 ft.	3001-4000 ft.	4001-10,000 ft.	2001-10,000 ft.	
No. of 90 ELL	1	N/A	73	50	40	30	25	20	15	N/A	N/A
	2		68	45	35	25	20	15	10	N/A	N/A
	3		63	40	30	20	15	10	N/A	N/A	N/A
	4		58	35	25	15	10	N/A	N/A	N/A	N/A
	5		53	30	20	10	N/A	N/A	N/A	N/A	N/A
	6		48	25	15	5	N/A	N/A	N/A	N/A	N/A
	7		43	20	10	N/A	N/A	N/A	N/A	N/A	N/A
	8		38	15	5	N/A	N/A	N/A	N/A	N/A	N/A
	9		33	10	N/A	N/A	N/A	N/A	N/A	N/A	N/A
	10		28	5	N/A	N/A	N/A	N/A	N/A	N/A	N/A

Pipe Size		2-1/2 in.					3 in.				
Input		030/045	070	090	110	135	030/045	070	090	110	135
Elevation		2001-10,000 ft.					2001-10,000 ft.				
No. of 90 ELL	1	105	96	53	38	N/A	121	121	114	114	70
	2	100	91	48	33	N/A	116	116	109	109	65
	3	95	86	43	28	N/A	111	111	104	104	60
	4	90	81	38	23	N/A	106	106	99	99	55
	5	85	76	33	18	N/A	101	101	94	94	50
	6	80	71	28	13	N/A	96	96	89	89	45
	7	75	66	23	N/A	N/A	91	91	84	84	40
	8	70	61	18	N/A	N/A	86	86	79	79	35
	9	65	56	13	N/A	N/A	81	81	74	74	30
	10	60	51	N/A	N/A	N/A	76	76	69	69	25

NOTES - Additional vent pipe and long radius elbows (required) used to terminate vent pipe outside the structure must be included in the total vent length calculation.
Intake and exhaust pipes are sized separately.
Values in table are for separate intake or exhaust pipe lengths.
Both intake and exhaust pipe must be the same size diameter.

VENT LENGTH — EXHAUST USING VENTILATED ATTIC/CRAWLSPACE INTAKE AIR

STANDARD TERMINATION AT 0 - 2000 ft. ELEVATION

Pipe Size		1-1/2 in.						2 in.					2-1/2 in.					3 in.				
Input		030	045	070	090	110	135	030/045	070	090	110	135	030/045	070	090	110	135	030/045	070	090	110	135
No. of 90 ELL	1	20	15	10	N/A	N/A	N/A	71	56	34	14	N/A	100	100	78	43	N/A	118	117	98	98	60
	2	15	10	N/A	N/A	N/A	N/A	66	51	29	9	N/A	95	95	73	38	N/A	113	112	93	93	55
	3	10	N/A	N/A	N/A	N/A	N/A	61	46	24	N/A	N/A	90	90	68	33	N/A	108	107	88	88	50
	4	N/A	N/A	N/A	N/A	N/A	N/A	56	41	19	N/A	N/A	85	85	63	28	N/A	103	102	83	83	45
	5	N/A	N/A	N/A	N/A	N/A	N/A	51	36	14	N/A	N/A	80	80	58	23	N/A	98	97	78	78	40
	6	N/A	N/A	N/A	N/A	N/A	N/A	46	31	9	N/A	N/A	75	75	53	18	N/A	93	92	73	73	35
	7	N/A	N/A	N/A	N/A	N/A	N/A	41	26	N/A	N/A	N/A	70	70	48	13	N/A	88	87	68	68	30
	8	N/A	N/A	N/A	N/A	N/A	N/A	36	21	N/A	N/A	N/A	65	65	43	N/A	N/A	83	82	63	63	25
	9	N/A	N/A	N/A	N/A	N/A	N/A	31	16	N/A	N/A	N/A	60	60	38	N/A	N/A	78	77	58	58	20
	10	N/A	N/A	N/A	N/A	N/A	N/A	26	11	N/A	N/A	N/A	55	55	33	N/A	N/A	73	72	53	53	15

NOTE - Additional vent pipe and long radius elbows (required) used to terminate vent pipe outside the structure must be included in the total vent length calculation.

STANDARD TERMINATION AT 2001 - 10,000 ft. ELEVATION

Pipe Size		1-1/2 in.	2 in.								
Input		030	030/045	070			090			110	135
Elevation		- - -	2001-10,000 ft.	2001-3000 ft.	3001-4000 ft.	4001-10,000 ft.	2001-3000 ft.	3001-4000 ft.	4001-10,000 ft.	2001-10,000 ft.	
No. of 90 ELL	1	N/A	71	50	40	30	25	20	15	N/A	N/A
	2		66	45	35	25	20	15	10	N/A	N/A
	3		61	40	30	20	15	10	N/A	N/A	N/A
	4		56	35	25	15	10	N/A	N/A	N/A	N/A
	5		51	30	20	10	N/A	N/A	N/A	N/A	N/A
	6		46	25	15	5	N/A	N/A	N/A	N/A	N/A
	7		41	20	10	N/A	N/A	N/A	N/A	N/A	N/A
	8		36	15	5	N/A	N/A	N/A	N/A	N/A	N/A
	9		31	10	N/A	N/A	N/A	N/A	N/A	N/A	N/A
	10		26	5	N/A	N/A	N/A	N/A	N/A	N/A	N/A

Pipe Size		2-1/2 in.					3 in.				
Input		030/045	070	090	110	135	030/045	070	090	110	135
Elevation		2001-10,000 ft.					2001-10,000 ft.				
No. of 90 ELL	1	100	96	53	38	N/A	118	117	98	98	60
	2	95	91	48	33	N/A	113	112	93	93	55
	3	90	86	43	28	N/A	108	107	88	88	50
	4	85	81	38	23	N/A	103	102	83	83	45
	5	80	76	33	18	N/A	98	97	78	78	40
	6	75	71	28	13	N/A	93	92	73	73	35
	7	70	66	23	N/A	N/A	88	87	68	68	30
	8	65	61	18	N/A	N/A	83	82	63	63	25
	9	60	56	13	N/A	N/A	78	77	58	58	20
	10	55	51	N/A	N/A	N/A	73	72	53	53	15

NOTE - Additional vent pipe and long radius elbows (required) used to terminate vent pipe outside the structure must be included in the total vent length calculation.

VENT LENGTHS — UNINSULATED EXHAUST PIPE IN UNCONDITIONED SPACE

[1] Winter Design Temperatures	Vent Pipe Diameter	Unit Input Size											
		030		045		070		090		110		135	
		[2] Maximum Equivalent Uninsulated Exhaust Vent Length (ft.)											
		PVC	PolyPro InnoFlue	PVC	PolyPro InnoFlue	PVC	PolyPro InnoFlue	PVC	PolyPro InnoFlue	PVC	PolyPro InnoFlue	PVC	PolyPro InnoFlue
32 to 21°F	1-1/2 in.	N/A	N/A	25	N/A	25	N/A	N/A	N/A	N/A	N/A	N/A	N/A
	2 in.	N/A	N/A	18	16	31	28	50	48	30	30	N/A	N/A
	2-1/2 in.	N/A	N/A	13	N/A	24	N/A	42	N/A	56	N/A	N/A	N/A
	3 in.	N/A	N/A	9	9	18	18	35	35	47	47	47	47
20 to 1°F	1-1/2 in.	N/A	N/A	15	N/A	20	N/A	N/A	N/A	N/A	N/A	N/A	N/A
	2 in.	N/A	N/A	9	8	18	16	32	29	30	30	N/A	N/A
	2-1/2 in.	N/A	N/A	5	N/A	13	N/A	24	N/A	34	N/A	N/A	N/A
	3 in.	N/A	N/A	N/A	N/A	8	8	19	19	26	26	26	26
0 to –20°F	1-1/2 in.	N/A	N/A	10	N/A	15	N/A	N/A	N/A	N/A	N/A	N/A	N/A
	2 in.	N/A	N/A	5	N/A	12	10	22	19	30	27	N/A	N/A
	2-1/2 in.	N/A	N/A	N/A	N/A	7	N/A	15	N/A	22	N/A	N/A	N/A
	3 in.	N/A	N/A	N/A	N/A	N/A	N/A	10	10	16	16	13	13

[1] Refer to 99% Minimum Design Temperature table provided in the current edition of the ASHRAE Handbook-Fundamentals.

[2] Maximum Equivalent Vent Length permitted is defined as Total Length (linear feet) of vent pipe, plus equivalent length (ft.) of fittings, plus equivalent length (ft.) of termination.

VENTING NOTES - Concentric Terminations are equivalent to 5 ft. of straight pipe and should be included when measuring total pipe length.
One 90° elbow is equivalent to 5 feet of straight vent pipe.
Two 45° elbows are equal to one 90° elbow.
One 45° elbow is equivalent to 2.5 feet of straight vent pipe.

PolyPro® poly-propylene vent pipe is a registered trademark of DuraVent®.

Innoflue® is a registered trademark of Centrotherm Eco Systems.

[1] NOTE - 60C and 60D size units that require air volumes over 1800 cfm must have one of the following:
1. Single side return air and Optional Return Air Base with transition that must accommodate required 20 x 25 x 1 inch (508 x 635 x 25 mm) air filter to maintain proper velocity.
2. Bottom return air.
3. Return air from both sides.
4. Bottom and one side return air.

See Blower Performance Tables for additional information.

[2] Optional Side Return Air Filter Kit is not for use with the Optional Return Air Base.

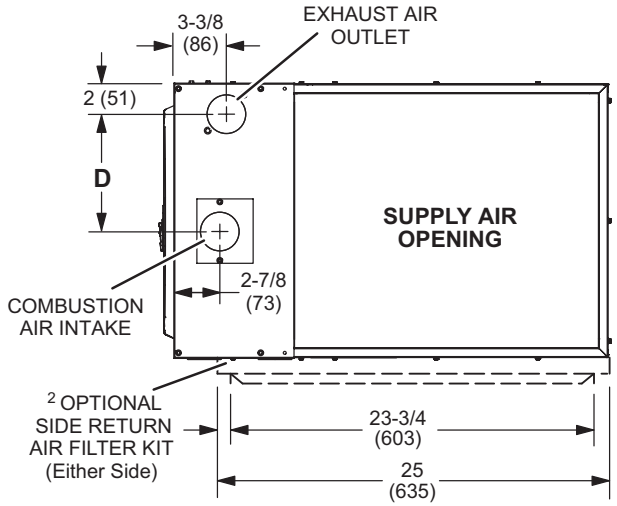

TOP VIEW

Flue Condensate Trap Assembly
Furnished for external field installation on either side of unit. (See installation instructions for additional information.)

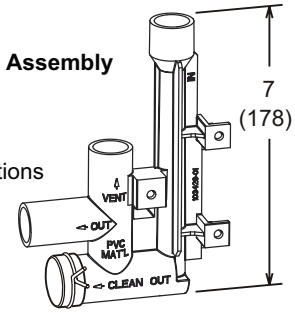

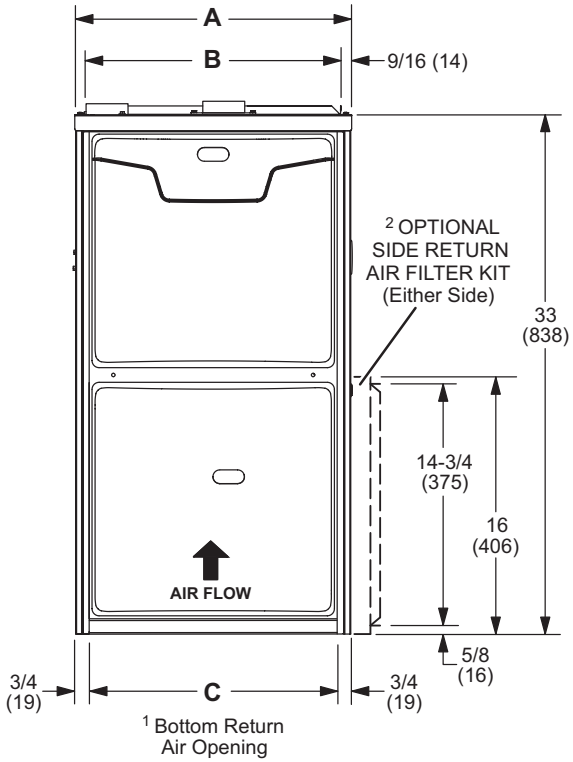

FRONT VIEW

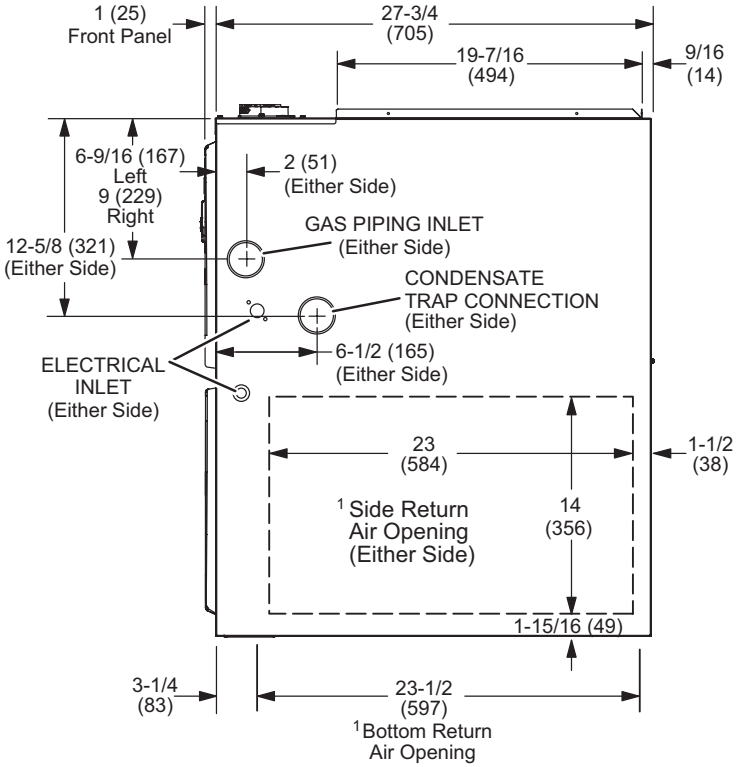

SIDE VIEW

Model No.	A		B		C		D	
	in.	mm	in.	mm	in.	mm	in.	mm
ML196UH030XE36B ML196UH045XE36B ML196UH070XE36B ML196UH070XE48B	17-1/2	446	16-3/8	416	16	406	7-5/8	194
ML196UH090XE36C ML196UH090XE48C ML196UH090XE60C ML196UH110XE60C	21	533	19-7/8	505	19-1/2	495	9-3/8	238
ML196UH135XE60D	24-1/2	622	23-3/8	594	23	584	11-1/8	283

LEFT-HAND AIR DISCHARGE

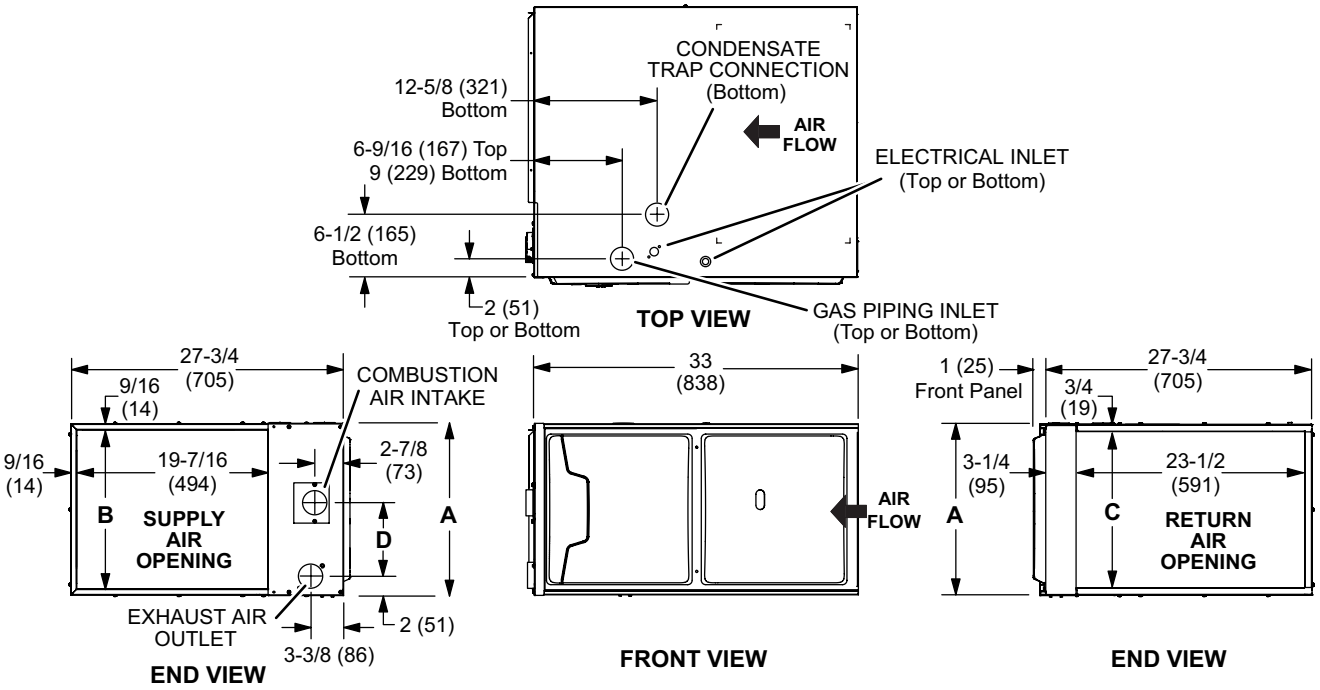

RIGHT-HAND AIR DISCHARGE

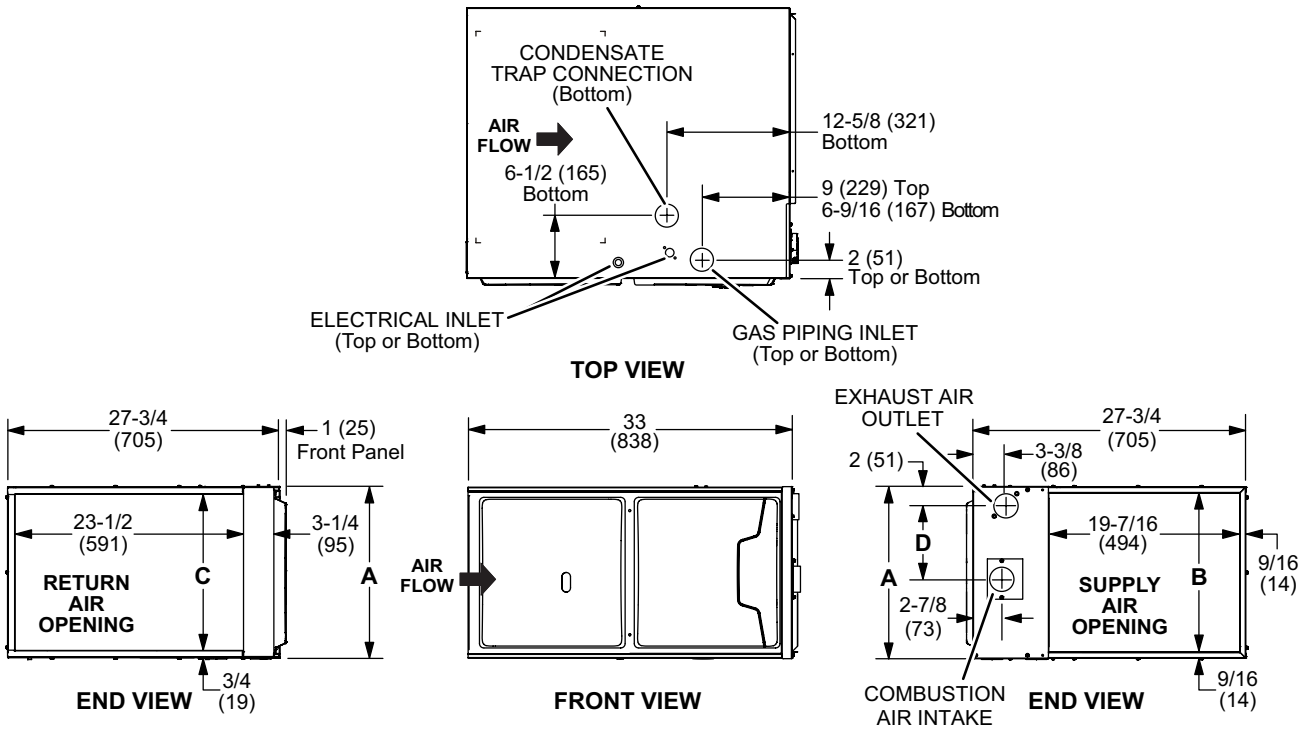

Model No.	A		B		C		D	
	in.	mm	in.	mm	in.	mm	in.	mm
ML196UH030XE36B ML196UH045XE36B ML196UH070XE36B ML196UH070XE48B	17-1/2	446	16-3/8	416	16	406	7-5/8	194
ML196UH090XE36C ML196UH090XE48C ML196UH090XE60C ML196UH110XE60C	21	533	19-7/8	505	19-1/2	495	9-3/8	238
ML196UH135XE60D	24-1/2	622	23-3/8	594	23	584	11-1/8	283

HORIZONTAL (END) FILTER KIT

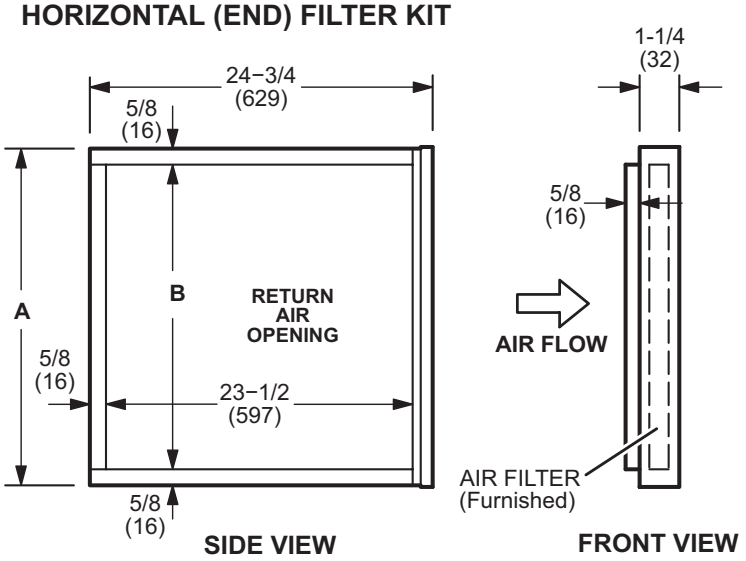

Furnace Cabinet Width	Catalog Number	A		B	
		in.	mm	in.	mm
B	87L96	18	457	16-3/4	425
C	87L97	21	533	18-3/4	476
D	87L98	25	635	23-3/4	603

Optional Return Air Base
(Upflow Applications Only - For use with B, C and D cabinets)

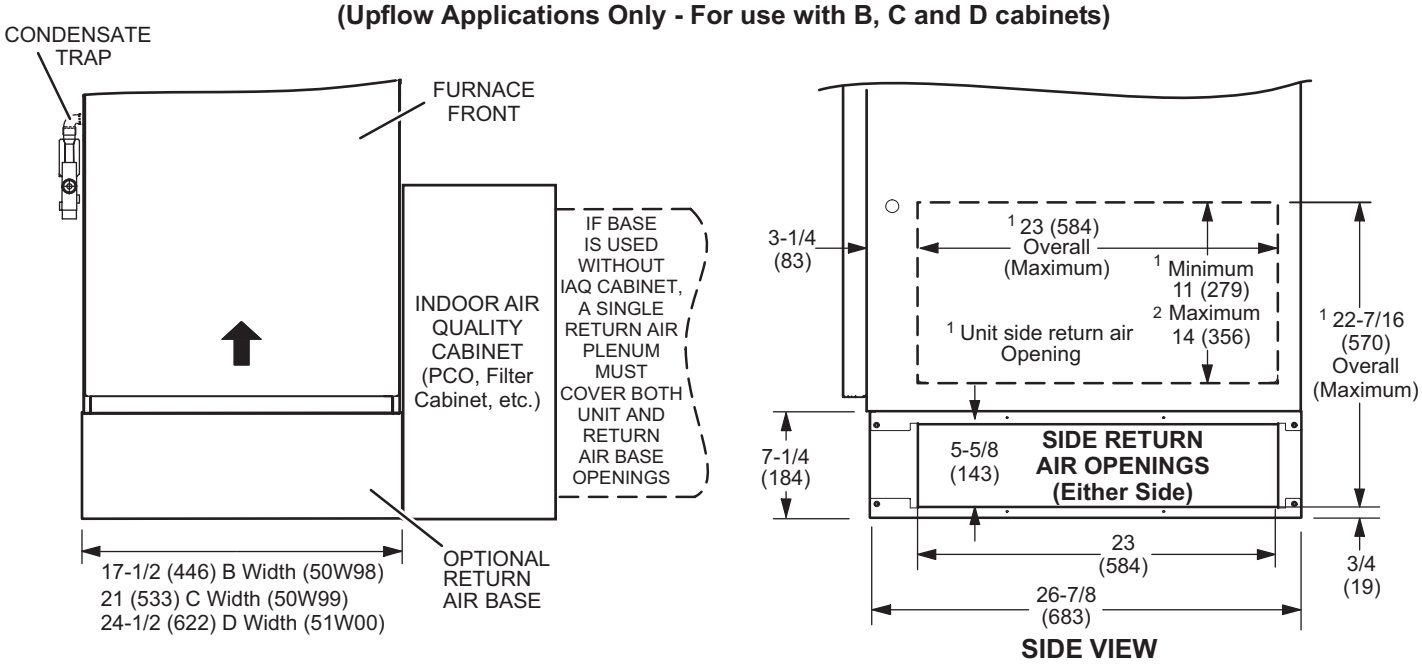

NOTE- Optional Side Return Air Filter Kits are not for use with Optional Return Air Base.

[1] Both the unit return air opening and the base return air opening must be covered by a single plenum or IAQ cabinet. Minimum unit side return air opening dimensions for units requiring 1800 cfm or more of air (W x H): 23 x 11 in. (584 x 279 mm). The opening can be cut as needed to accommodate plenum or IAQ cabinet while maintaining dimensions shown. Side return air openings must be cut in the field. There are cutting guides stenciled on the cabinet for the side return air opening. The size of the opening must not extend beyond the markings on the furnace cabinet.

[2] To minimize pressure drop, the largest opening height possible, up to 14 in. (356 mm), is preferred.

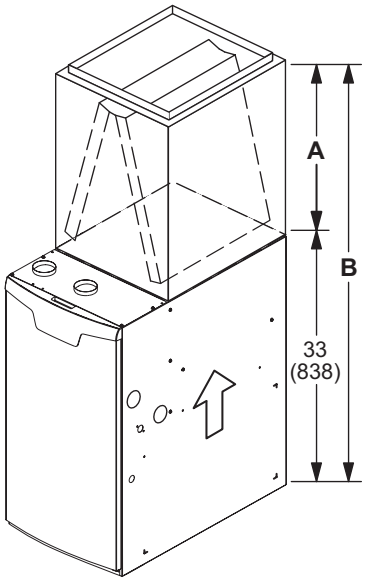

UPFLOW POSITION - CASED

Model		A		B	
CK40CT	**C35/CX35**	**in.**	**mm**	**in.**	**mm**
CK40CT-18/24B	C35/CX35-18/24B	16-1/2	419	49-1/2	1257
CK40CT-24B	C35/CX35-24B	18-1/2	470	51-1/2	1308
CK40CT-30B	C35/CX35-30B	22-1/2	572	55-1/2	1410
CK40CT-30/36B CK40CT-30/36C	C35/CX35-30/36B C35/CX35-30/36C	24-1/2	622	57-1/2	1461
CK40CT-36B	C35/CX35-36B	24-1/2	622	57-1/2	1461
CK40CT-48B CK40CT-48C	C35/CX35-48B C35/CX35-48C	27-1/2	699	60-1/2	1537
CK40CT-49C	C35/CX35-49C	29-1/2	749	62-1/2	1588
CK40CT-50/60C	C35/CX35-50/60C	27-1/2	699	60-1/2	1537
CK40CT-60C	CX35-60C	31-1/2	800	64-1/2	1638
CK40CT-60D	CX35-60D	29-1/2	749	62-1/2	1588

UPFLOW POSITION - UNCASED

Model		A		B	
CK40UT	**C35**	**in.**	**mm**	**in.**	**mm**
CK40UT-18/24B	C35-18/24B	14-1/8	359	47-1/8	1197
CK40UT-24B	C35-24B	16-3/8	416	49-3/8	1254
CK40UT-30B	C35-30B	20-3/4	527	53-3/4	1365
CK40UT-30/36B CK40UT-30/36C	C35-30/36B C35-30/36C	22-1/4	565	55-1/4	1403
CK40UT-36B	C35-36B	22-3/8	568	55-3/8	1407
CK40UT-48B CK40UT-48C	C35-48B C35-48C	26-1/4	667	59-1/4	1505
CK40UT-49C	C35-49C	28-1/2	724	61-1/2	1562
CK40UT-50/60C	C35-50/60C	25-7/8	657	58-7/8	1495
CK40UT-60C	C35-60C	30-5/8	778	63-5/8	1616
CK40UT-60D	C35-60D	28	711	61	1549

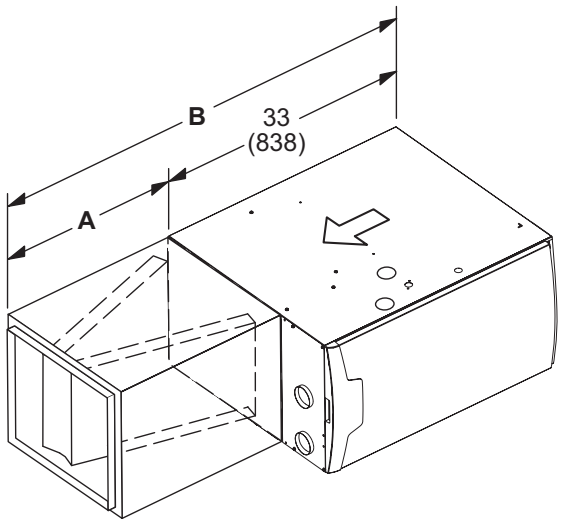

HORIZONTAL POSITION

Model		A		B	
CK40HT	**CHX35**	**in.**	**mm**	**in.**	**mm**
CK40HT-24B CK40HT-30B CK40HT-36B CK40HT-36C CK40HT-42C CK40HT-48C	CHX35-24B CHX35-30B CHX35-36B CHX35-36C CHX35-42C CHX35-48C	26-1/2	673	59-1/2	1511
CK40CT-42B CK40CT-48B CK40CT-51/61C CK40CT-60D	CHX35-42B CHX35-48B CHX35-51/61C CHX35-60D	31-1/2	880	64-1/2	1638

FLUSH-MOUNT VENT TERMINATION KIT 51W11 (US) or 51W12 (CANADA)

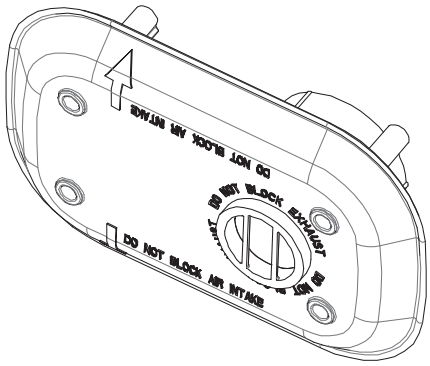

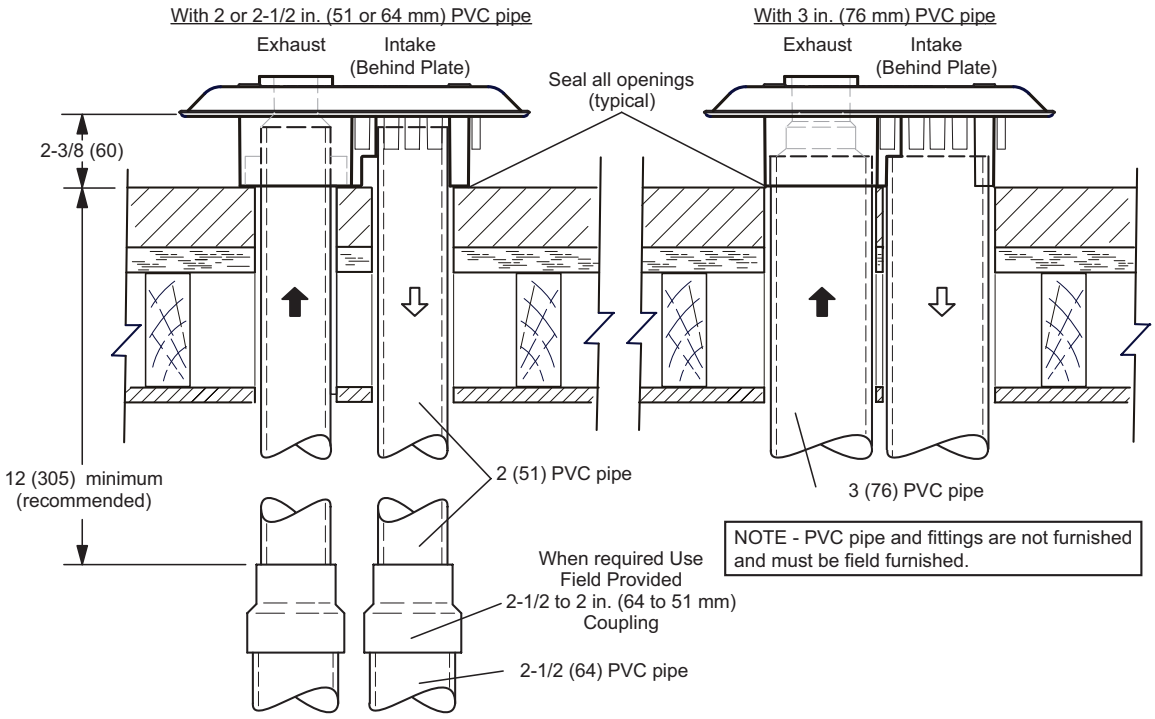

NOTE - PVC pipe and fittings are not furnished and must be field furnished.

MUFFLERS
15Y66 - 2-inch
16A56 - 3-inch

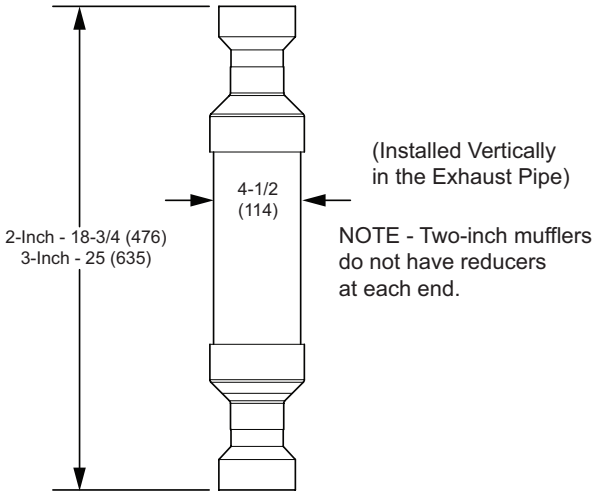

(Installed Vertically in the Exhaust Pipe)

NOTE - Two-inch mufflers do not have reducers at each end.

CONCENTRIC WALL TERMINATION APPLICATIONS

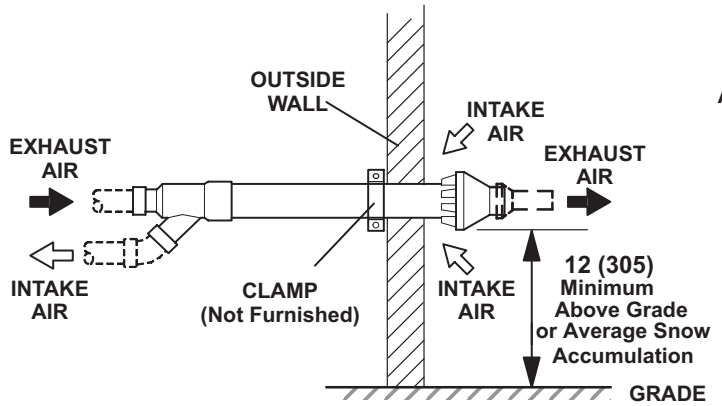

CONCENTRIC ROOF TERMINATION APPLICATIONS

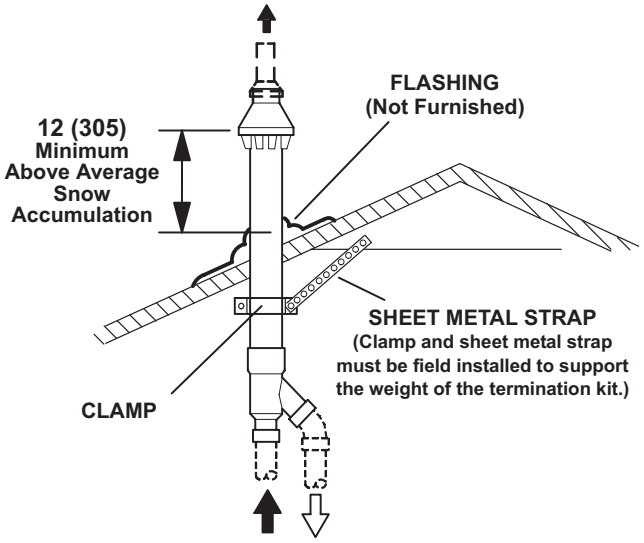

71M80 / 69M29 / 44W92 − 2 inch kits
60L46 / 44W93 − 3 inch kits
See Installation Instructions for additional information.

Note - Field provided reducer may be required to adapt different vent pipe sizes to termination.

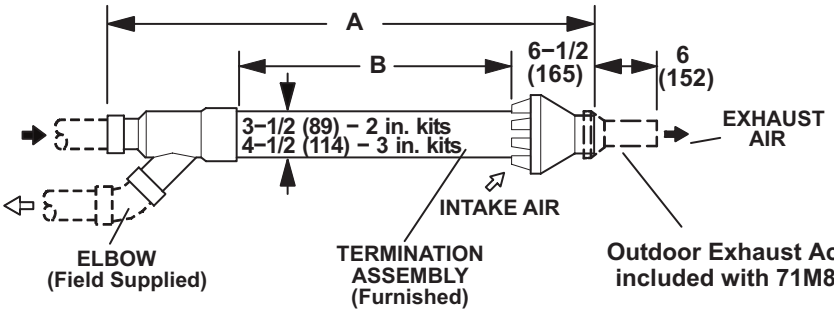

Cat. No.	A		B	
	in.	mm	in.	mm
71M80 69M29	33−3/8	848	16−3/4	425
44W92 (Canada)	29	737	15−1/2	394
60L46	38−7/8	987	21−3/16	538
44W93 (Canada)	36−1/8	918	19−1/2	495

NOTE − Typical illustration for dimensions only. Design may vary depending on kit ordered.

WALL TERMINATION KITS (CLOSE-COUPLE)
EXTENDED VENT FOR GRADE CLEARANCE
2 inch (51 mm) 22G44 (US)
3 inch (76 mm) 44J40 (US)
See Installation Instructions for additional information.

Note - Field provided reducer may be required to adapt different vent pipe sizes to termination.

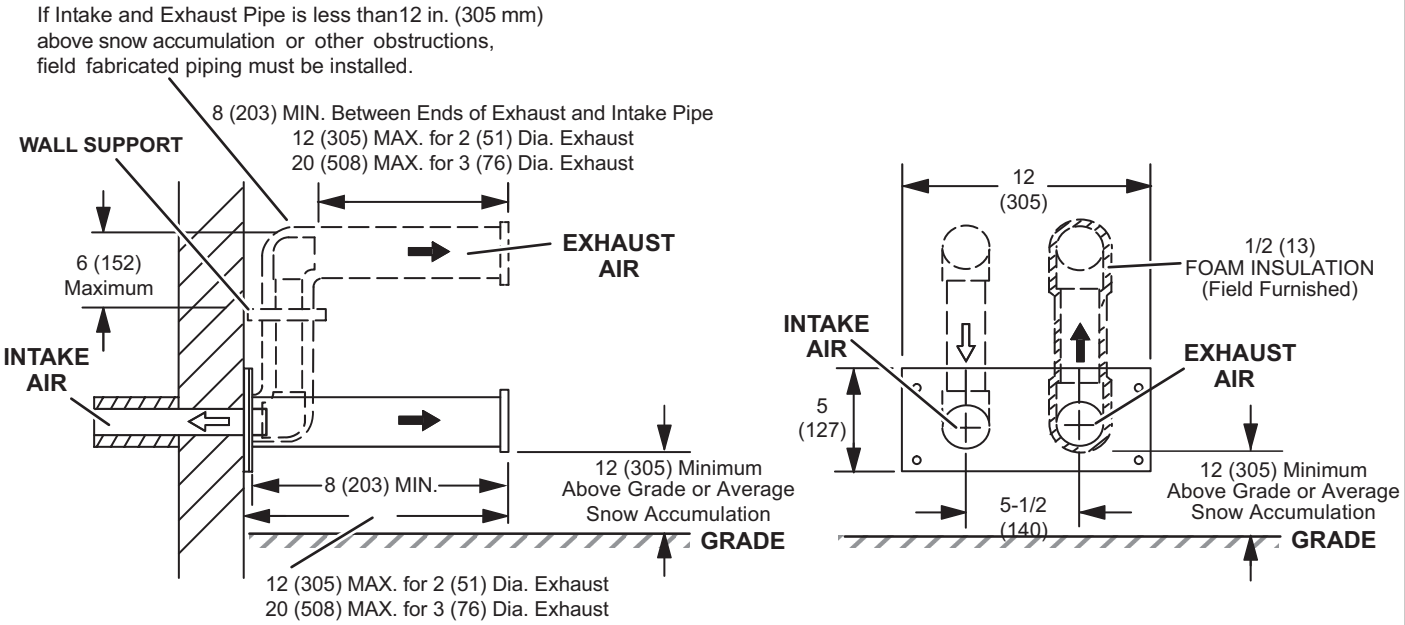

WALL TERMINATION KITS (CLOSE-COUPLE)
EXTENDED VENT FOR GRADE CLEARANCE
2 inch (51 mm) 30G28 (WTK Canada)
3 inch (76 mm) 81J20 (WTK Canada)
See Installation Instructions for additional information.

Note - Field provided reducer may be required to adapt different vent pipe sizes to termination.

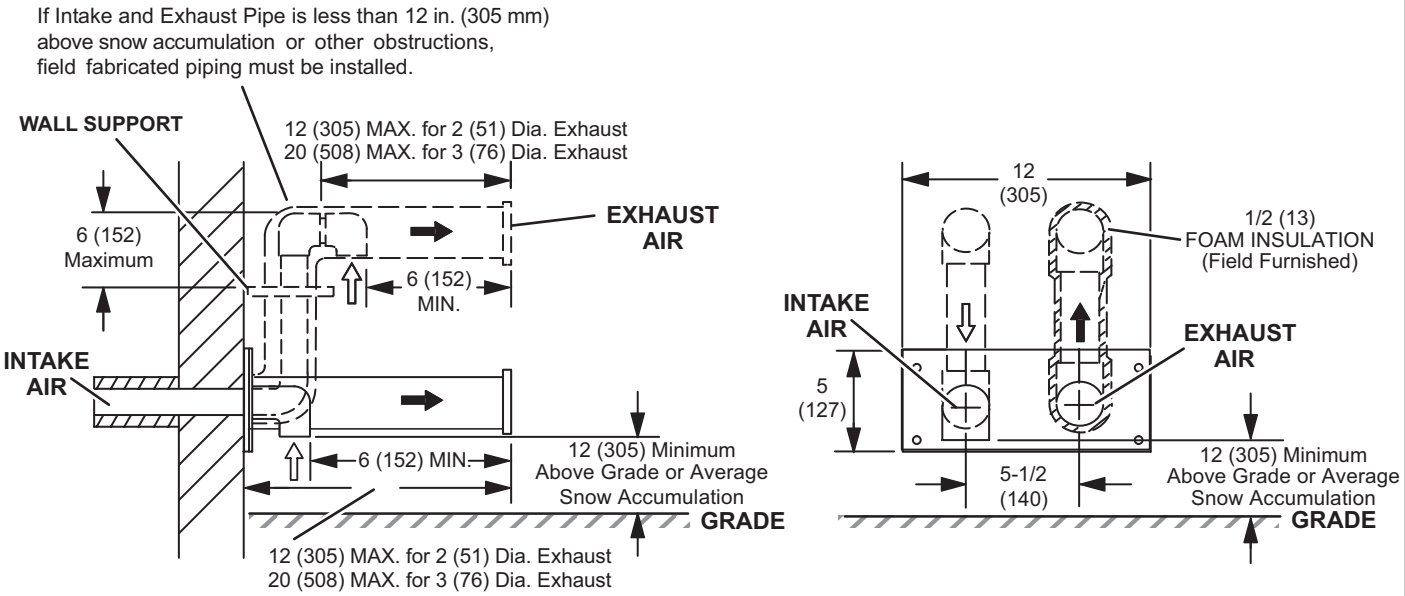

BLOWER DATA

ML196UH030XE36B PERFORMANCE (Less Filter)

External Static Pressure in. w.g.	Air Volume / Watts at Various Blower Speeds									
	High (Black)		Medium-High (Brown)		Medium (Blue)		Medium-Low (Yellow)		Low (Red)	
	cfm	Watts	cfm	Watts	cfm	Watts	cfm	Watts	cfm	Watts
0.00	1402	332	1138	190	979	121	801	68	904	94
0.10	1374	346	1109	198	940	130	743	75	725	75
0.20	1346	360	1080	206	902	138	684	82	546	56
0.30	1321	370	1047	217	866	149	633	90	465	60
0.40	1295	384	1012	228	834	155	589	96	408	67
0.50	1265	395	985	235	794	165	540	107	351	72
0.60	1224	396	956	247	760	175	500	110	306	79
0.70	1152	379	929	256	730	180	453	120	266	84
0.80	1088	353	894	267	673	192	413	125	224	89
0.90	914	304	855	273	644	200	374	132	- - -	- - -
1.00	755	262	694	243	607	208	- - -	- - -	- - -	- - -

ML196UH045XE36B PERFORMANCE (Less Filter)

External Static Pressure in. w.g.	Air Volume / Watts at Various Blower Speeds									
	High (Black)		Medium-High (Brown)		Medium (Blue)		Medium-Low (Yellow)		Low (Red)	
	cfm	Watts	cfm	Watts	cfm	Watts	cfm	Watts	cfm	Watts
0.00	1420	351	1267	245	1177	187	958	107	904	90
0.10	1393	360	1231	257	1140	201	910	115	857	99
0.20	1365	369	1195	268	1104	215	861	122	810	109
0.30	1333	383	1166	281	1070	224	826	132	760	118
0.40	1304	396	1140	293	1039	231	784	141	722	125
0.50	1254	392	1116	302	1002	246	728	149	673	131
0.60	1191	380	1089	311	969	255	687	157	625	141
0.70	1115	354	1047	324	941	265	651	165	582	147
0.80	987	318	976	311	906	273	601	170	537	155
0.90	858	282	859	283	835	268	555	181	489	161
1.00	713	251	703	248	713	243	497	189	444	168

ML196UH070XE36B PERFORMANCE (Less Filter)

External Static Pressure in. w.g.	Air Volume / Watts at Various Blower Speeds									
	High (Black)		Medium-High (Brown)		Medium (Blue)		Medium-Low (Yellow)		Low (Red)	
	cfm	Watts	cfm	Watts	cfm	Watts	cfm	Watts	cfm	Watts
0.00	1433	334	1295	247	1187	187	956	110	917	93
0.10	1404	347	1256	256	1145	196	913	114	864	98
0.20	1374	361	1218	266	1102	206	870	119	811	103
0.30	1350	370	1192	278	1081	216	821	131	766	114
0.40	1319	384	1157	290	1043	225	780	136	721	123
0.50	1286	399	1133	300	1008	241	744	145	680	133
0.60	1241	393	1104	312	982	249	702	153	637	138
0.70	1169	373	1066	321	946	261	658	163	601	148
0.80	1064	341	1013	315	914	269	616	172	552	152
0.90	925	310	857	279	860	272	581	178	514	160
1.00	753	261	705	244	754	253	515	191	478	167

BLOWER DATA

ML196UH070XE48B PERFORMANCE (Less Filter)

External Static Pressure in. w.g.	Air Volume / Watts at Various Blower Speeds									
	High (Black)		Medium-High (Brown)		Medium (Blue)		Medium-Low (Yellow)		Low (Red)	
	cfm	Watts	cfm	Watts	cfm	Watts	cfm	Watts	cfm	Watts
0.00	1907	623	1751	468	1526	314	1364	225	1279	179
0.10	1876	637	1708	480	1489	329	1320	234	1227	189
0.20	1845	652	1665	492	1452	344	1275	243	1175	199
0.30	1810	665	1640	508	1414	357	1245	254	1130	210
0.40	1755	663	1601	520	1381	369	1186	268	1078	220
0.50	1691	651	1570	536	1336	381	1154	280	1031	232
0.60	1632	631	1528	550	1292	394	1106	290	979	246
0.70	1537	600	1490	555	1249	408	1059	303	928	252
0.80	1433	567	1400	537	1216	421	1011	313	890	263
0.90	1321	527	1296	511	1169	433	969	325	833	273
1.00	1204	493	1184	481	1118	435	919	336	781	283

ML196UH090XE36C PERFORMANCE (Less Filter)

External Static Pressure in. w.g.	Air Volume / Watts at Various Blower Speeds									
	High (Black)		Medium-High (Brown)		Medium (Blue)		Medium-Low (Yellow)		Low (Red)	
	cfm	Watts	cfm	Watts	cfm	Watts	cfm	Watts	cfm	Watts
0.00	1508	334	1377	253	1211	174	948	89	939	87
0.10	1478	345	1343	265	1181	186	920	99	824	79
0.20	1448	356	1310	278	1152	197	892	109	709	72
0.30	1418	369	1282	288	1123	210	847	115	661	76
0.40	1353	380	1256	299	1095	219	812	125	627	85
0.50	1362	392	1233	311	1064	227	782	131	575	91
0.60	1340	403	1203	317	1040	237	744	140	540	99
0.70	1308	413	1180	327	1004	244	717	150	487	103
0.80	1266	412	1151	336	969	255	668	156	444	113
0.90	1202	393	1116	345	948	264	639	165	406	116
1.00	1087	354	1058	341	911	270	581	170	361	124

ML196UH090XE48C PERFORMANCE (Less Filter)

External Static Pressure in. w.g.	Air Volume / Watts at Various Blower Speeds									
	High (Black)		Medium-High (Brown)		Medium (Blue)		Medium-Low (Yellow)		Low (Red)	
	cfm	Watts	cfm	Watts	cfm	Watts	cfm	Watts	cfm	Watts
0.00	1723	379	1511	248	1389	191	1302	169	1194	136
0.10	1684	395	1480	264	1356	209	1269	180	1147	142
0.20	1645	410	1448	281	1323	226	1236	191	1101	149
0.30	1626	422	1414	295	1294	238	1195	204	1070	162
0.40	1593	435	1381	307	1245	253	1158	213	1022	172
0.50	1564	451	1347	322	1210	261	1120	225	983	182
0.60	1529	465	1308	335	1175	274	1084	237	943	193
0.70	1481	463	1288	346	1143	288	1039	250	897	204
0.80	1395	442	1247	359	1103	297	1003	262	860	214
0.90	1290	412	1211	369	1067	309	960	272	813	225
1.00	1123	361	1097	351	1011	319	917	281	772	230

BLOWER DATA

ML196UH090XE60C PERFORMANCE (Less Filter)

External Static Pressure in. w.g.	Air Volume / Watts at Various Blower Speeds									
	High (Black)		Medium-High (Brown)		Medium (Blue)		Medium-Low (Yellow)		Low (Red)	
	cfm	Watts	cfm	Watts	cfm	Watts	cfm	Watts	cfm	Watts
0.00	2107	618	1849	416	1699	321	1608	262	1433	196
0.10	2067	631	1820	430	1663	333	1566	276	1390	206
0.20	2027	644	1791	444	1627	345	1524	291	1347	216
0.30	1992	660	1741	460	1583	355	1485	302	1306	223
0.40	1965	673	1703	473	1546	369	1439	313	1254	235
0.50	1938	691	1681	483	1503	383	1395	326	1210	245
0.60	1901	706	1635	500	1462	395	1359	337	1158	257
0.70	1871	719	1607	512	1428	405	1315	349	1112	264
0.80	1815	708	1559	527	1387	417	1273	358	1071	275
0.90	1711	679	1536	538	1349	429	1229	371	1018	285
1.00	1629	649	1485	551	1309	441	1188	380	963	293

BLOWER DATA

ML196UH110XE60C PERFORMANCE (Less Filter)

External Static Pressure in. w.g.	Air Volume / Watts at Different Blower Speeds																			
	Bottom Return Air, Side Return Air with Return Air from Both Sides or Return Air from Bottom and One Side.										**Single Side Return Air** − Air volumes in **bold** (over 1800 cfm) require Optional Return Air Base and field fabricated transition to accommodate 20 x 25 x 1 in. air filter in order to maintain proper air velocity.									
	High (Black)		**Medium-High** (Brown)		**Medium** (Blue)		**Medium-Low** (Yellow)		**Low** (Red)		**High** (Black)		**Medium-High** (Brown)		**Medium** (Blue)		**Medium-Low** (Yellow)		**Low** (Red)	
	cfm	**Watts**	**cfm**	**Watts**	**cfm**	**Watts**	**cfm**	**Watts**	**cfm**	**Watts**	**cfm**	**Watts**	**cfm**	**Watts**	**cfm**	**Watts**	**cfm**	**Watts**	**cfm**	**Watts**
0.00	2197	640	1964	429	1791	330	1658	277	1488	210	**2122**	**634**	**1892**	**424**	1722	333	1635	266	1452	194
0.10	2160	658	1911	446	1742	346	1620	291	1438	220	**2093**	**644**	**1858**	**438**	1688	341	1590	281	1410	205
0.20	2124	676	1858	464	1693	361	1582	306	1388	230	**2064**	**655**	**1824**	**451**	1653	349	1546	296	1367	216
0.30	2084	688	1822	477	1658	373	1536	314	1336	239	**2033**	**669**	1788	467	1619	363	1511	306	1321	228
0.40	2051	703	1797	492	1615	386	1497	328	1288	250	**1996**	**686**	1749	482	1580	376	1473	322	1275	239
0.50	2024	718	1754	508	1581	397	1452	342	1247	261	**1971**	**704**	1709	498	1543	392	1436	330	1230	251
0.60	1993	734	1716	519	1537	413	1414	353	1203	270	**1941**	**720**	1676	512	1503	403	1387	347	1184	262
0.70	1942	742	1680	535	1500	423	1381	361	1157	277	**1903**	**734**	1644	524	1468	419	1351	356	1140	271
0.80	1877	721	1644	547	1465	434	1342	372	1121	288	**1855**	**732**	1606	542	1424	430	1313	369	1105	282
0.90	1789	693	1614	563	1423	450	1294	386	1061	300	1780	707	1571	554	1386	443	1273	380	1061	293
1.00	1696	654	1580	573	1395	461	1267	396	1014	310	1675	670	1535	569	1352	456	1238	392	1019	302

ML196UH135XE60D PERFORMANCE (Less Filter)

External Static Pressure in. w.g.	Air Volume / Watts at Different Blower Speeds																			
	Bottom Return Air, Side Return Air with Return Air from Both Sides or Return Air from Bottom and One Side.										**Single Side Return Air** − Air volumes in **bold** (over 1800 cfm) require Optional Return Air Base and field fabricated transition to accommodate 20 x 25 x 1 in. air filter in order to maintain proper air velocity.									
	High (Black)		**Medium-High** (Brown)		**Medium** (Blue)		**Medium-Low** (Yellow)		**Low** (Red)		**High** (Black)		**Medium-High** (Brown)		**Medium** (Blue)		**Medium-Low** (Yellow)		**Low** (Red)	
	cfm	**Watts**	**cfm**	**Watts**	**cfm**	**Watts**	**cfm**	**Watts**	**cfm**	**Watts**	**cfm**	**Watts**	**cfm**	**Watts**	**cfm**	**Watts**	**cfm**	**Watts**	**cfm**	**Watts**
0.00	2458	883	2280	697	2069	539	1856	391	1667	296	**2377**	**865**	**2210**	**674**	**2033**	**518**	**1808**	**381**	1661	275
0.10	2425	901	2247	714	2033	556	1821	406	1633	306	**2340**	**883**	**2167**	**694**	**1995**	**534**	1780	392	1611	291
0.20	2392	919	2214	730	1998	572	1787	420	1598	316	**2303**	**901**	**2125**	**715**	**1956**	**551**	1752	402	1560	306
0.30	2361	933	2179	752	1954	588	1745	436	1549	331	**2277**	**912**	**2095**	**733**	**1920**	**566**	1711	417	1527	316
0.40	2326	956	2151	771	1931	599	1694	450	1508	343	**2253**	**933**	**2067**	**748**	**1882**	**581**	1670	433	1479	329
0.50	2291	971	2120	785	1885	617	1666	462	1465	356	**2215**	**951**	**2037**	**762**	**1850**	**595**	1634	444	1444	342
0.60	2249	990	2078	802	1852	633	1622	476	1420	366	**2188**	**967**	**2007**	**781**	**1816**	**608**	1601	460	1404	355
0.70	2223	1006	2049	819	1815	646	1583	489	1376	378	**2159**	**989**	**1973**	**797**	1779	627	1565	474	1363	368
0.80	2181	1001	2002	832	1782	660	1548	501	1340	388	**2127**	**1004**	**1938**	**815**	1742	638	1525	487	1315	380
0.90	2061	928	1974	846	1743	678	1507	515	1298	401	**2096**	**1023**	**1906**	**828**	1716	655	1487	501	1276	390
1.00	1937	869	1933	857	1680	703	1478	527	1263	414	**1997**	**936**	**1870**	**840**	1670	670	1441	513	1237	399

REVISIONS

Sections	Description of Change
Approvals	Updated ENERGY STAR® usage.

Visit us at www.Lennox.com
For the latest technical information, www.LennoxPros.com
Contact us at 1-800-9-LENNOX

NOTE - Due to Lennox' ongoing commitment to quality, Specifications, Ratings and Dimensions subject to change without notice and without incurring liability.
Improper installation, adjustment, alteration, service or maintenance can cause property damage or personal injury.
Installation and service must be performed by a qualified installer and servicing agency.

©2026 Lennox Industries, Inc.