GAS FURNACES

EL196UHE

ELITE® SERIES

Upflow / Horizontal - Constant Torque Blower Motor - 60 Hz

RESIDENTIAL PRODUCT SPECIFICATIONS

Bulletin No. 210855
July 2026
Supersedes all previous versions

ELITE® SERIES

QUALIFIED ONLY IN

U.S. SOUTH: AL, AZ, AR, CA, DC, DE, FL, GA, HI, KY, LA, MD, MS, NV, NM, NC, OK, SC, TN, TX, VA

ENERGY STAR

AFUE - 96%
Input - 30,000 to 110,000 Btuh
Nominal Add-on Cooling - 1.5 to 5 Tons

MODEL NUMBER IDENTIFICATION

EL 1 96 UH 070 X E 36 B

Unit Type
EL = Elite® Series

Stages
1 = One-Stage

AFUE
96 = 96%

Configuration
UH = Upflow/Horizontal

Nominal Gas Heat Input
030 = 30,000 Btuh
045 = 44,000 Btuh
070 = 66,000 Btuh
090 = 88,000 Btuh
110 = 110,000 Btuh

Low NOx
X = Units meet California Nitrogen Oxides Standard (40 ng/J)

Blower
E = High Efficiency Constant Torque Blower Motor

Nominal Add-On Cooling Capacity
36 = 1.5-3 tons
48 = 2.5-4 tons
60 = 3-5 tons

[1] **Cabinet Width**
B = 17-1/2 in.
C = 21 in.

[1] Indoor coils with the same letter designation will physically match the furnace.

FEATURE HIGHLIGHTS

1. Lennox Duralok Plus™ Heat Exchanger
2. Secondary Heat Exchanger
3. Inshot Burners
4. SureLight® Hot Surface Ignitor
5. Gas Control Valve
6. Combustion Air Inducer
7. Flame Rollout Switches
8. Direct Vent / Non-Direct Vent Sealed Combustion System
9. SureLight® Integrated Furnace Control
10. Power Saver™ Constant Torque Blower Motor
11. Insulated Cabinet
12. Safety Interlock Switch
13. Gas Piping And Electrical Inlets

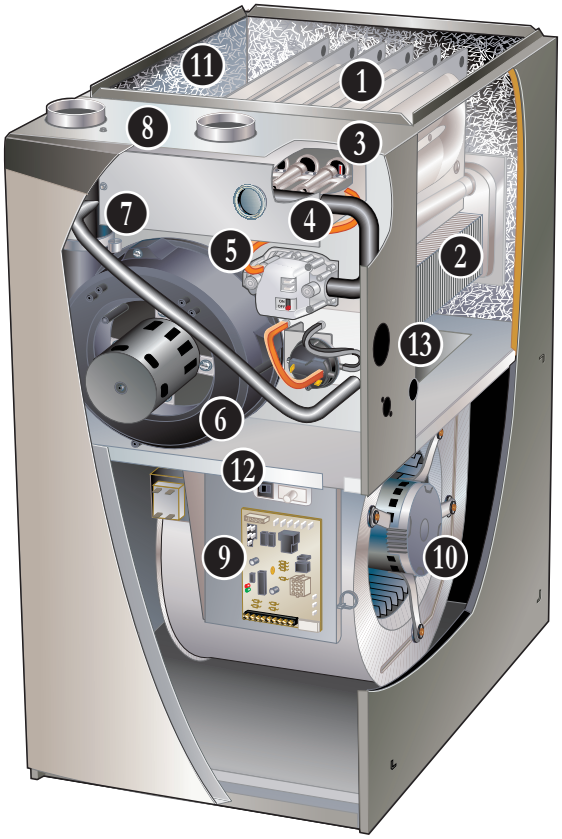

CONTENTS

Blower Data 15
Approvals And Warranty 3
Dimensions 17
- Furnace/Coil Combined Dimensions 23
- Optional Accessories 19
- Optional Accessories - Venting. 20
- Unit - Horizontal Position 18
- Unit - Upflow Position 17
Features 3
Gas Heat Accessories 10
High Altitude Derate 11
Installation Clearances 8
Model Number Identification. 1
Optional Accessories - Order Separately 10
Specifications 9
Vent Lengths 12
- Exhaust Or Intake 12
- Exhaust Using Ventilated Attic/Crawlspace Intake Air. 13
- Uninsulated Exhaust Pipe In Unconditioned Space 14

APPROVALS AND WARRANTY

APPROVALS

- AHRI Certified
- CSA International Certified
- Tested and rated according to US DOE test procedures and FTC labeling regulations
- Units are approved for installations from 0 - 4500 ft.
- ENERGY STAR® units are certified only in the U.S. South in certain states and are designed to use less energy, help save money on utility bills, and help protect the environment
- ISO 9001 Registered Manufacturing Quality System
- Blower data from unit tests conducted in Lennox Laboratory air test chamber

NOTE - This furnace has not been CSA International design certified for installation in mobile homes, recreational vehicles, or outdoors.

California Only

- These furnaces **do not meet** the South Coast Air Quality Management District (SCAQMD) Rule 1111 and San Joaquin Valley Air Pollution Control District (SJVAPCD) Rule 4905 NOx emission limit (14 ng/J) and cannot be installed within the SCAQMD, SJVAPCD and Bay Area
- These furnaces are approved by the California Energy Commission and meets California Nitrogen Oxides Standard (NOx) limits of 40 ng/J

WARRANTY

- Duralok Plus™ Aluminized Steel Heat Exchanger:
  - Limited lifetime (twenty year transferable) in residential applications
  - Limited ten years in non-residential applications
- All other covered components:
  - Limited five years in residential installations
  - Limited one year in non-residential installations

NOTE - Refer to Lennox® Basic Limited Warranty at www.Lennox.com for additional details..

FEATURES

APPLICATIONS

- Input capacities of 30,000, 44,000, 66,000, 88,000, and 110,000 Btuh
- Energy efficiency (AFUE) - 96%
- Compact cabinet for upflow, horizontal-left or horizontal-right applications without any modifications
- Removable bottom seal panel shipped in place for side return air is easily removed for bottom/end return air applications
- Lennox add-on indoor coils, high-efficiency air cleaners and humidifiers can easily be added to furnace
- Shipped factory assembled with all controls installed and wired
- Factory test operated to ensure proper operation

HEATING SYSTEM

1 Lennox Duralok Plus™ Heat Exchanger Assembly

- Lennox developed heat exchanger assembly consists of primary heat exchanger and secondary condenser coil assembly
- Main multi-pass crimped seam design clamshell type
- Constructed of heavy-gauge, aluminized steel
- Designed for normal expansion and contraction with maximum efficiency and minimum resistance to air flow

2

- Secondary heat exchanger condenser coil constructed of aluminum fins fitted to stainless steel tubes
- Coil is factory tested for leaks
- Condensate drain header box assembly located on front of coil
- Compact size permits low overall design of furnace cabinet
- Laboratory life cycle tested in excess of industry standards

Lennox Designed Header Box

- Header box on end of condenser coil collects flue condensate for disposal through condensate drains
- Drains are located on each side of the cabinet for easy field installation of condensate drain trap
- Only one drain is used, the other drain is sealed
- Condensate drain trap is included with the unit for field installation

HEATING SYSTEM (continued)

Lennox Designed Flue Condensate Trap Assembly
- Field installed outside the conditioned air stream
- Assembly can be mounted on either side of cabinet in upflow applications
- Assembly is mounted below the cabinet in horizontal applications
- Can also be mounted remotely (up to 5 ft. away) from unit
- See installation instructions
- 90° street elbow furnished for ease of drain trap installation
- Drain connection can be made with field provided PVC pipe or PVC coupling
- Drain cap on trap allows easy cleaning and winterizing

3 Inshot Burners
- Aluminized steel inshot burners provide efficient, trouble-free operation
- Burner venturi mixes air and gas in correct proportion for proper combustion
- Burner assembly can be removed from the unit as a single component for ease of service

4 SureLight® Hot Surface Ignitor
- Tough, reliable, long-life, trouble-free performance
- Silicon nitride ignitor
- Cemented to steatite block for protection against current leakage
- Ignition leads are constructed of nickel plated copper and are enclosed in high temperature Teflon® insulation for dependable operation

5 Gas Control Valve
- 24 volt redundant combination gas control valve combines manual shut off switch (On-Off), automatic electric valve (dual) and gas pressure regulation into a compact combination control

6 Combustion Air Inducer
- Shaded pole heavy duty blower prepurges heat exchanger and safely vents flue products
- Operates only during heating cycle
- Pressure switch proves combustion air inducer operation before allowing gas valve to open

7 Flame Rollout Switches (2)
- Factory installed on burner box
- Switch provides protection from abnormal operating conditions
- Manual reset

Limit Control
- Primary limit is accurately located on vestibule panel
- Automatic reset

Optional Accessories

High Altitude Orifice Kits
- Required on all units for proper unit operation at altitudes from 7501 to 10,000 ft.
- Available for natural gas and LPG/propane

High Altitude Pressure Switch Kit
- Required for proper unit operation on installations above 4500 ft.

Natural Gas to LPG/Propane Conversion Kit
- Required for field changeover from natural gas to LPG/Propane

LPG/Propane to Natural Gas Conversion Kit
- Required for field changeover from LPG/Propane to natural gas

Muffler (US Only)
- Significantly reduces outdoor operating sound levels
- Two-inch diameter muffler is optional for 030 through 110 input models

NOTE - Two-inch muffler is optional for the 110 input model with a maximum vent pipe length of up to 29 ft.

- Three-inch diameter muffler is optional for 110 and 135 input models

NOTE - Three-inch muffler is optional for the 110 input model with a minimum vent pipe length of 30 ft.

- Installed vertically in the exhaust piping
- See Optional Accessory Dimension Drawing

DIRECT VENT / NON-DIRECT VENT SEALED COMBUSTION SYSTEM

8
- Furnace features a “sealed combustion” system and can be installed in either Direct Vent or Non-Direct applications
- In Direct Vent applications, combustion air is supplied from outdoors and flue gases are discharged outdoors
- In Non-Direct Vent applications, combustion air is supplied from indoors and flue gases are discharged outdoors

NOTE - Lennox has approved the use of DuraVent® PolyPro® and Centrotherm InnoFlue® manufactured vent pipe and terminations as an alternative to PVC vent pipe. Must be ordered separately.

- Tested and listed to the ULC S636 standard in Canada
- The polypropylene venting system must follow the uninsulated and unconditioned space vent lengths listed in the table on 15
- Refer to the Installation Instructions for additional details

Flue Coupling
- Assists with exhaust flue piping connection and servicing
- Includes flexible one 2 inch rubber coupling and two adjustable bands
- Approved for all Lennox 90% furnaces

DIRECT VENT / NON-DIRECT VENT SEALED COMBUSTION SYSTEM (continued)

Termination Kits

- Facilitates installation of combustion air intake pipe and flue exhaust pipe
- Refer to venting table in this bulletin to determine pipe size needed and proper termination kit required
- Certain Termination Kits are certified to ULC S636 standard for use in Canada only
- See Optional Accessories table and dimension drawings

Concentric - Direct Vent Applications

- 2 or 3 inch kit contains concentric termination assembly, reducer bushing and 45 degree elbow
- 2 inch kit for -045-070 models contains an outdoor exhaust accelerator
- Kit requires single hole penetration of roof or wall for installation
- Roof Termination Flashing Kit is available for use with 2 inch Kits
- CSA certified

Flush-Mount

- Kit contains flush-mount termination, accelerator, mounting template and hardware
- Kit may be used with 2, 2-1/2 or 3 in. pipe

Wall Assembly
Close Couple (US Only) - Direct Vent Applications

- 2 or 3 inch kit consists of close-couple, side-by-side PVC piping with galvanized steel wall cover plate for sealing and isolating piping penetration of the wall
- Piping spacing and length is sized for proper wall installations
- CSA certified

Close Couple WTK (Canada Only) - Direct Vent Applications

- 2 or 3 inch kit contains one insulated faceplate, one insulated exhaust pipe, elbow and fittings. Certified to ULC S636 standard

NOTE - Maintain a maximum of 6 inches between the inlet and outlet openings in the installation of the pipes.

Roof Termination Flashing Kit

- For vertical venting through a roof
- 2 or 3 inch kit contains two neoprene rubber roof flashings
- Vent pipe and insulation not furnished
- Flashing Kit can also be used with Concentric Vent Termination Kits used in vertical venting rooftop applications

CONTROLS

9 SureLight® Integrated Furnace Control

- Contains all necessary controls and relays to operate furnace
- Combustion air inducer is operated by the integrated furnace control. Prior to ignition, a pre-purge cycle for 15 seconds is initiated
- After the main burners are turned off, a post-purge cycle for 5 seconds is run
- Flame sensor assures safe and reliable operation
- Should loss of flame occur, the integrated furnace control will initiate 4 re-attempts at ignition before locking out unit operation for 60 minutes
- Watchguard type circuit automatically resets ignition controls after one hour of continuous thermostat demand after unit lockout, eliminating nuisance calls for service
- Fan control consists of adjustable blower timed-off delay (60, 90, 120, 180 seconds - factory setting 90 seconds) and fixed blower timed-on delay (30 seconds heating, 2 seconds cooling)
- For air-conditioning applications, blower is automatically energized on thermostat demand for cooling
- Two accessory terminals furnished for additional power supply requirements for 120 volt (less than 1 amp) power humidifiers and powered air cleaners
- One additional terminal is furnished for power supply requirements for 24V (less than 0.5 amp) low voltage accessories
- Ignition control has a single red LED to indicate status and as an aid in troubleshooting
- Last ten codes are stored in non-volatile memory (accessible by recall button on control) for servicing

24 Volt Transformer (40VA)

- Furnished and factory installed on outside of control box
- Circuit breaker (furnished) is wired in series

Field Wiring Make-Up Box

- Furnished for line voltage wiring
- Factory installed internally on left side of furnace
- Box may be installed internally on right side of furnace

CONTROLS (continued)

Optional Accessories

Blower Relay Kit
(For Use With Two-Stage Outdoor Units)

- Allows furnace blower speed changes when matched with two-stage air conditioners or heat pumps

E30 Smart Wi-Fi Thermostat

- Wi-Fi enabled, electronic 7-day, universal, multi-stage, programmable, touchscreen thermostat
- 3 Heat/2 Cool
- Auto-changeover
- Controls dehumidification during cooling mode and humidification during heating mode

- Offers enhanced capabilities including humidification / dehumidification / dewpoint measurement and control, Humiditrol® control, and equipment maintenance reminders
- Easy to read 7 in. color touchscreen (measured diagonally)
- LCD display with backlight shows the current and set temperature, time, inside relative humidity, system status (operating mode and schedules) and outside temperature (optional outdoor sensor required)
- Smooth Setback Recovery starts system early to achieve setpoint at start of program period
- Compressor short-cycle protection (5 minutes)
- Up to four separate schedules are available plus Schedule IQ™
- One-Touch Away Mode - A quick and easy way to set the cooling and heating setpoints while away
- Smart Away™ - Uses geo-fencing technology to determine when the homeowner is within a predetermined distance from the home to operate the system when leaving, away and arriving
- Wi-Fi remote monitoring and adjustment through a home wireless network for desktop PCs, laptops and apps for smartphones or tablets
- Smart home automation compatible with Apple HomeKit™, Amazon Alexa®, Google Assistant and IFTTT
- Service Dashboard features online real-time monitoring of installed thermostats
- High Definition Color Display with Subbase, Smart Hub Controller, wallplate (for retrofit installations) furnished for easy installation
- See the Lennox® E30 Smart Wi-Fi Thermostat Product Specifications bulletin for more information

Remote Outdoor Temperature Sensor

- Used with the Lennox® E30 Smart Thermostat
- When installed outdoors, sensor allows thermostat to display outdoor temperature

NOTE - Sensor is required for Enhanced Dehumidification Control (EDA) applications.

NOTE - The outdoor sensor is furnished as standard with Lennox® Communicating outdoor units, optional for conventional units.

Thermostat

- Thermostat is not furnished with unit
- See Lennox Price Book for selection

Furnace Twinning Panel

- Required to operate two identical furnaces simultaneously from a single thermostat
- For single stage conventional (1 heat/1 cool), multi-stage conventional (2 heat/2 cool) and heat pump (3 heat/2 cool) equipment
- Can be used with common or separate ducted systems
- Contains PC Control Board with terminal strip connections for thermostat and HVAC equipment
- LEDs indicate system operating status
- Uses standard 18-gauge thermostat wire
- Power Supply: 24 VAC, 40VA (transformer not furnished)
- Mounting base with hardware furnished
- Dimensions (H x W x D): 10 x 5 x 2 in.

NOTE - Only identical furnaces should be twinned in order to ensure that both furnace blowers start at the same time. If furnaces are not identical, back draft dampers can be installed in either the supply or return duct.

Up to four identical furnaces can be twinned. Requires two panels that are wired together.

Furnace Twinning Kit

- Required to operate two furnaces simultaneously
- Kit consists of twinning relays, quick connect terminals and mounting hardware
- Used for single-stage heating/single-stage cooling with a single-stage thermostat

Transformer (75VA)

- Recommended when furnace is used with zoning or defrost thermostats and other 24V accessories requiring a higher VA rating
- Circuit breaker (furnished) is wired in series
- Replaces the standard 40VA transformer

FEATURES

BLOWER

- Direct drive blower
- Statically and dynamically balanced
- Resiliently mounted
- Blower assembly easily removed for servicing

10 Power Saver™ Constant Torque Blower Motor

- DC Brushless Motor
- High Efficiency Constant Torque
- ECM (Electronically Commutated Motor)
- Motor is programmed to provide constant torque at each of the selectable speeds
- Motor is controlled by the Integrated Furnace Control
- Blower speeds are easily changed on the integrated furnace control
- See Blower Data tables

CABINET

- Low-profile, narrow width allows easy installation
- Heavy-gauge, cold rolled steel construction
- Pre-painted finish
- Flanges provided on supply air opening for ease of plenum connection or alignment with indoor coil
- 11 Insulated with foil faced insulation on sides and back of heating compartment and mat faced insulation in blower compartment
- Sealed blower compartment
- Inner blower compartment access panel seals blower compartment from air leakage
- Cabinet door can be removed without any tools
- Complete service access
- 12 Safety interlock switch automatically shuts off power to unit when blower compartment access door is removed
- 13 Gas piping and electrical inlets are provided in both sides of cabinet

Bottom/Side Return Air Entry:

- Upflow/horizontal with bottom return air entry:
  - Remove furnished bottom seal panel from cabinet
- Upflow only with side return-air entry:
  - Corners are marked on either side of cabinet for return air cut-out
- See dimension drawings

NOTE - 60C size units that require air volumes over 1800 cfm must have one of the following:

1. Single side return air and Optional Return Air Base with transition that must accommodate required 20 x 25 x 1 inch air filter to maintain proper velocity
2. Bottom return air
3. Return air from both sides
4. Bottom and one side return air

- See Blower Performance Tables for additional information

Coil Match-Up

- All furnaces exactly match Lennox cased upflow indoor coils and horizontal indoor coils with same letter designation (A, B, C, D) in model number
- No adaptor required
- Engaging holes furnished on cabinet for alignment
- Lennox uncased coils match furnaces without any overhang but require an optional adaptor base or field fabricated transition to match furnace opening
- See coil bulletin for additional information

Low Leakage Cabinet

- All models have less than 2% air leakage
- Meets ANSI/ASHRAE Standard 193-2010 “Method of Test for Determining the Air Tightness of HVAC Equipment”

Optional Accessories

Condensate Drain Heat Cable Kits

- Self-limiting wattage heat cable prevents condensate drain from freezing in unconditioned areas
- Available in 6 or 24 ft. lengths

Horizontal Suspension Kit

- Provides suspension of unit and indoor coil in horizontal applications
- Allows complete service access
- Consists of corner mounted hanging brackets with vibration isolators, return air end support rail and hardware for assembly
- Metal hanging straps must be field provided

Crawl Space Vent Drain Kit

- Allows venting through a crawl space for upflow and horizontal applications
- Kit for Canada is certified to ULC S636
- Includes 2 or 3 inch sanitary tee, 2 inch PVC assembly, PVC boot and clamp

FEATURES

CABINET (continued)

Optional Accessories (continued)

Return Air Base

NOTE - On furnaces with side return air and condensate trap on the same side of the cabinet, a field fabricated transition or Return Air Base is required when using an IAQ product higher than 14-3/16 inches installed next to the unit and serviced from the front. IAQ products higher than 20 inches require a field fabricated transition.

NOTE - Must be used for 60C and 60D size models with air volumes over 1800 cfm in upflow applications when only one side return is required.

- Cabinet is shipped flat for easy field assembly
- Pre-painted steel to match the furnace
- See Dimension Drawing

High Performance Economizer (Commercial Applications Only)

- Designed for applications requiring outdoor air to be utilized in a commercial HVAC system
- Allows the entry of fresh outdoor air for free cooling, reducing the requirement for mechanical cooling
- Heavy gauge galvanized steel cabinet lined with thick fiberglass insulation
- Mixed air sensor, outdoor air sensor and 24VAC transformer furnished
- Approved for California Title 24 building standards. ASHRAE 90.1-2010 compliant
- See separate Product Specifications bulletin for additional information and available control and sensor options

FILTER (not furnished)

- Filter and provisions for external mounting must be field provided

Optional Accessories

Air Filter and Rack Kit for Horizontal Return Air (End) Applications

- Washable or vacuum cleanable polyurethane frame type filter and external end return air rack available for field installation
- Rack has filter door for easy filter servicing
- Flanges on rack allow easy duct connection
- See Dimension Drawing

Air Filter and Rack Kit for Upflow Side Return Air

NOTE - Not for use with Return Air Base

- Washable or vacuum cleanable polyurethane frame type filter and external side return air rack available for field installation
- Available in single and ten pack kits
- Rack has filter door for easy filter servicing
- Flanges on rack allow easy duct connection
- Field installs on either side of unit cabinet
- See Dimension Drawing

INSTALLATION CLEARANCES

Sides	[1] 0 inches (0 mm)
Rear	0 inches (0 mm)
Top/Plenum	1 inch (25 mm)
Front	0 inches (0 mm)
Front (service/alcove)	24 inches (610 mm)
Floor	[2] Combustible

NOTE − Air for combustion must conform to the methods outlined in the National Fuel Gas Code (NFPA 54/ANSI−Z223.1) or the National Standard of Canada CAN/CSA−B149.1 Natural Gas and Propane Installation Code".

NOTE − In the U.S. flue sizing must conform to the methods outlined in the current National Fuel Gas Code (NFPA 54/ANSI−Z223.1) or applicable provisions of local building codes. In Canada flue sizing must conform to the methods outlined in National Standard of Canada CAN/CSA−B149.1.

[1] Allow proper clearances to accommodate condensate trap and vent pipe installation.

[2] Do not install the furnace directly on carpeting, tile, or other combustible materials other than wood flooring.

REFRIGERATION DETECTION SYSTEM (RDS)

Optional Accessories

Refrigerant Detection System (RDS) Coil Sensor Kit

- Complies with UL 60335-2-40 approved standard
- Required for field installation for all systems using R-454B refrigerant if sensor is not furnished with coil
- Consists of Refrigerant Detection System (RDS) sensor, lineset sleeves, mounting brackets and A2L labeling
- Sensor ensures safe operation for systems equipped with R-454B refrigerant
- Sensor will detect anu R-454B refrigerant

Refrigerant Detection System (RDS) Blower Control Board

Communicating Blower Control Board (Universal)

- Communicating Blower Control Board and Sensor can be used universally with any Lennox® communicating furnace or any non-communicating 24 volt furnace

Non-Communicating Blower Control Board

- Non-Communicating Blower Control Board and Sensor can be used with any non-communicating 24 volt furnace

Standard Features

- Complies with UL 60335-2-40 approved standard
- Required for all systems using R-454B refrigerant
- Connects to the RDS sensor furnished with the RDS Coil Sensor Kit
- Supports up to two RDS Sensors (factory setting)
- Used as an interface between indoor unit and thermostat to control system
- Ensures safe operation for systems equipped with R-454B refrigerant
- If R-454B refrigerant is detected, the refrigerant detection system will stop compressor and/or heating operating and operate the blower to reduce concentrations in the conditioned space
- Once safe levels are reached the HVAC system will resume normal operation
- Multi-color LED for system status and as an aid in troubleshooting
  - Flashing LED codes for system status (Green/Blue) and diagnosing Sensor errors (Red)
- Alarm relay can trigger an external alarm if R-454B refrigerant is detected
- Zone relay opens all zone dampers (if part of a zoning system) if R-454B refrigerant is detected
- Power is disabled to non-communicating thermostats to prevent demand if R-454B refrigerant is detected
- On system start-up blower will run for five minutes and any thermostat demands are disabled
- Dimensions (H x W x D): 7-7/16 x 7-7/16 x 2-1/2 (189 x 189 x 127 mm)

NOTE - See Refrigerant Detection System (RDS) Components Table on page 12.

See the CK40 Indoor Coil Product Specifications bulletins for more information.

Refer to the Installation Instructions for additional information.

SPECIFICATIONS

	Model No.	EL196UH030XE36B	EL196UH045XE36B	EL196UH070XE36B
Gas Heating Performance	[1] AFUE	96%	96%	96%
	Input - Btuh	30,000	44,000	66,000
	Output - Btuh	29,000	43,000	64,000
	Temperature rise range - °F	25 - 55	35 - 65	35 - 65
	Gas Manifold Pressure (in. w.g.) Nat. Gas / LPG/Propane	3.5 / 10	3.5 / 10	3.5 / 10
	High static - in. w.g.	0.5	0.5	0.5
Energy Star® Certified		Yes	Yes	Yes
Connections in.	Intake / Exhaust Pipe (PVC)	2 / 2	2 / 2	2 / 2
	Gas pipe size IPS	1/2	1/2	1/2
	Condensate Drain Trap (PVC pipe) - i.d.	3/4	3/4	3/4
	with furnished 90° street elbow	3/4 slip x 3/4 Mipt	3/4 slip x 3/4 Mipt	3/4 slip x 3/4 Mipt
	with field supplied (PVC coupling) - o.d.	3/4 slip x 3/4 MPT	3/4 slip x 3/4 MPT	3/4 slip x 3/4 MPT
Indoor Blower	Wheel nom. dia. x width - in.	10 x 8	10 x 8	10 x 8
	Motor Type	DC Brushless	DC Brushless	DC Brushless
	Motor output - hp	1/2	1/2	1/2
	Tons of add-on cooling	1.5 - 3	1.5 - 3	1.5 - 3
	Air Volume Range - cfm	175 - 1435	520 - 1345	550 - 1380
Electrical Data	Voltage	120 volts - 60 hertz - 1 phase		
	Blower motor full load amps	6.8	6.8	6.8
	Maximum overcurrent protection	15	15	15
Shipping Data	lbs. - 1 package	120	129	134

NOTE - Filters and provisions for mounting are not furnished and must be field provided.

[1] Annual Fuel Utilization Efficiency based on DOE test procedures and according to FTC labeling regulations. Isolated combustion system rating for non-weatherized furnaces.

SPECIFICATIONS

	Model No.	EL196UH090XE48C	EL196UH110XE60C
Gas Heating Performance	[1] AFUE	96%	96%
	Input - Btuh	88,000	110,000
	Output - Btuh	86,000	107,000
	Temperature rise range - °F	50 - 80	45 - 75
	Gas Manifold Pressure (in. w.g.) Nat. Gas / LPG/Propane	3.5 / 10	3.5 / 10
	High static - in. w.g.	0.5	0.5
Energy Star® Certified		Yes	Yes
Connections in.	Intake / Exhaust Pipe (PVC)	2 / 2	2 / 2
	Gas pipe size IPS	1/2	1/2
	Condensate Drain Trap (PVC pipe) - i.d.	3/4	3/4
	with furnished 90° street elbow	3/4 slip x 3/4 Mipt	3/4 slip x 3/4 Mipt
	with field supplied (PVC coupling) - o.d.	3/4 slip x 3/4 MPT	3/4 slip x 3/4 MPT
Indoor Blower	Wheel nom. dia. x width - in.	10 x 10	11-1/2 x 10
	Motor Type	DC Brushless	DC Brushless
	Motor output - hp	3/4	1
	Tons of add-on cooling	2.5 - 4	3 - 5
	Air Volume Range - cfm	760 - 1740	1055 - 2220
Electrical Data	Voltage	120 volts - 60 hertz - 1 phase	
	Blower motor full load amps	8.4	10.9
	Maximum overcurrent protection	15	15
Shipping Data	lbs. - 1 package	158	170

NOTE - Filters and provisions for mounting are not furnished and must be field provided.

[1] Annual Fuel Utilization Efficiency based on DOE test procedures and according to FTC labeling regulations. Isolated combustion system rating for non-weatherized furnaces.

OPTIONAL ACCESSORIES - ORDER SEPARATELY

			"B" Width Models	"C" Width Models
CABINET ACCESSORIES				
Horizontal Suspension Kit - Horizontal only			**51W10**	**51W10**
Return Air Base - Upflow only			**50W98**	**50W99**
High Performance Economizer (Commercial Only)			**10U53**	**10U53**
CONDENSATE DRAIN KITS				
Condensate Drain Heat Cable		6 ft.	**26K68**	**26K68**
		24 ft.	**26K69**	**26K69**
Crawl Space Vent Drain Kit		US	**51W18**	**51W18**
		Canada	**15Z70**	**15Z70**
CONTROLS				
Blower Relay Kit (for two-stage outdoor units)			**85W66**	**85W66**
Furnace Twinning Panel			**Y3653**	**Y3653**
Furnace Twinning Kit			**16W72**	**16W72**
Transformer (75VA)			**27J32**	**27J32**
E30 Smart Wi-Fi Thermostat			**20A65**	**20A65**
Remote Outdoor Temperature Sensor			**X2658**	**X2658**
FILTER KITS				
[1] **Air Filter and Rack Kit**	Horizontal (end)		**87L96**	**87L97**
		Size of filter - in.	18 x 25 x 1	20 x 25 x 1
	Side Return	Single	**44J22**	**44J22**
		Ten Pack	**66K63**	**66K63**
		Size of filter - in.	16 x 25 x 1	16 x 25 x 1
TERMINATION KITS				
See Installation Instructions for specific venting information.				
Direct Vent	Concentric	US - 2 in.	**71M80**	**69M29**
		3 in.	**- - -**	**60L46**
		Canada - 2 in.	**44W92**	**44W92**
		3 in.	**- - -**	**44W93**
	Flush-Mount	US - 2, 2-1/2 or 3 in.	**51W11**	**51W11**
		Canada - 2, 2-1/2 or 3 in.	**51W12**	**51W12**
	Wall - Close Couple	US - 2 in.	**22G44**	**- - -**
		3 in.	**44J40**	**44J40**
	Wall - Close Couple WTK	Canada - 2 in.	**30G28**	**- - -**
		3 in.	**81J20**	**81J20**
	Roof Termination Flashing Kit (no vent pipe - 2 flashings)	2 in.	**15F75**	**15F75**
		3 in.	**44J41**	**44J41**
VENTING				
Flue Coupling		2 in.	**17H92**	**17H92**

[1] Cleanable polyurethane frame type filter.

NOTE - Termination Kits (**44W92**, **44W93**, **30G28**, **51W12**, **81J20**) and Crawl Space Vent Drain Kit (**15Z70**) are certified to ULC S636 standard for use in Canada only.

GAS HEAT ACCESSORIES

Input	High Altitude Pressure Switch Kit		Natural Gas to LPG/Propane Kit	LPG/Propane to Natural Gas Kit	Natural Gas High Altitude Orifice Kit	LPG/Propane High Altitude Orifice Kit	Muffler (US Only)
	4501 - 7500 ft.	7501 - 10,000 ft.	0 - 7500 ft.	0 - 7500 ft.	7501 - 10,000 ft.	7501 - 10,000 ft.	
030	**11U66**	**11U69**	**17H63**	**N/A**	**14C90**	**17H66**	**15Y66 (2-inch)**
045	**11U66**	**11U69**	**11K49**	**73W81**	**73W37**	**11K44**	**15Y66 (2-inch)**
070	**11U70**	**11U68**	**11K49**	**73W81**	**73W37**	**11K44**	**15Y66 (2-inch)**
090	**11U70**	**11U64**	**11K49**	**73W81**	**73W37**	**11K44**	**15Y66 (2-inch)**
110	**11U70**	**11U64**	**11K49**	**73W81**	**73W37**	**11K44**	[1] **15Y66 (2-inch)** **16A56 (3-inch)**

[1] Two-inch diameter muffler (**15Y66**) is optional for 110 input model with a maximum vent pipe length of up to 29 ft.
Three-inch diameter muffler (**16A56**) is optional for 110 input model with a minimum vent pipe length of 30 ft.

REFRIGERANT DETECTION SYSTEM (RDS) COMPONENTS

Description		Order No.
Refrigerant Detection System (RDS) Coil Sensor Kit		**26Z69**
Refrigerant Detection System (RDS) Blower Control Board	Any Lennox® Communicating Furnace or any Non-Communicating 24V Furnace (Universal)	**27A03**
	Any Non-Communicating 24V Furnace	**27A02**

NOTE - Communicating Blower Control Board and Sensor can be used universally with Lennox® communicating furnace or any non-communicating 24 volt furnace.
Non-Communicating Blower Control Board and Sensor can be used with any non-communicating 24 volt furnace.

HIGH ALTITUDE DERATE

NOTE - Units may be installed at altitudes up to 10,000 ft.
At altitudes above 4501 ft. the unit must be derated to match the manifold pressure information shown below.
Units installed at altitudes of 4501 to 10,000 ft. require a pressure switch change.
Units installed at altitudes of 7501 to 10,000 ft. require an orifice change.
See the Gas Heat Accessories table for ordering information.

NOTE - This is the only permissible derate for these units.

NOTE - In Canada, certification for installations at elevations over 4500 feet is the jurisdiction of local authorities.

Input	Gas	Manifold Pressure in. w.g.					Supply Line Pressure in. w.g. 0 - 10,000 ft.	
		0 - 4500 ft.	4501 - 5500 ft.	5501 - 6500 ft.	6501 - 7500 ft.	7501 - 10,000 ft.	Min.	Max.
All Sizes	Natural	3.5	3.3	3.2	3.1	3.5	4.5	13.0
	LPG/Propane	10.0	9.4	9.1	8.9	10.0	11.0	13.0

OUTDOOR TERMINATION KIT USAGE

Input Size	Vent Pipe Diameter (in.)	Standard Terminations				Concentric Terminations		
		Flush Mount Kit	Wall Kit		Field Fabricated Exhaust Accelerator Size Required	Concentric Kit		
			2 inch	3 inch		1-1/2 inch	2 inch	3 inch
		51W11 (US) [5] 51W12 (CA)	22G44 (US) [5] 30G28 (CA)	44J40 (US) [5] 81J20 (CA)		71M80 (US) [5] 44W92 (CA)	69M29 (US) [5] 44W92 (CA)	60L46 (US) [5] 44W93 (CA)
030/045	[1] 1-1/2	[4] YES	YES	[2] YES	1-1/2 in.	[3] YES	- - -	- - -
	2	[4] YES	YES	[2] YES	1-1/2 in.	[3] YES	- - -	- - -
	2-1/2	[4] YES	YES	[2] YES	1-1/2 in.	[3] YES	- - -	- - -
	3	[4] YES	YES	[2] YES	1-1/2 in.	[3] YES	- - -	- - -
070	[1] 1-1/2	[4] YES	YES	[2] YES	1-1/2 in.	[3] YES	- - -	- - -
	2	[4] YES	YES	[2] YES	1-1/2 in.	[3] YES	- - -	- - -
	2-1/2	[4] YES	YES	[2] YES	1-1/2 in.	[3] YES	- - -	- - -
	3	[4] YES	YES	[2] YES	1-1/2 in.	[3] YES	- - -	- - -
090	2	[4] YES	- - -	YES	2 in.	- - -	YES	YES
	2-1/2	[4] YES	- - -	YES	2 in.	- - -	YES	YES
	3	[4] YES	- - -	YES	2 in.	- - -	YES	YES
110	2	YES	- - -	YES	2 in.	- - -	YES	YES
	2-1/2	YES	- - -	YES	2 in.	- - -	YES	YES
	3	YES	- - -	YES	2 in.	- - -	YES	YES

NOTE - Standard Terminations do not include any vent pipe or elbows external to the structure.
Any vent pipe or elbows external to the structure must be included in total vent length calculations. See Vent Length Tables.

[1] 2 inch to 1-1/2 inch reducer required, must be field provided.

[2] Requires field provided 1-1/2 in. outdoor exhaust accelerator.

[3] Concentric Kits **71M80** and **44W92** include 1-1/2 in. outdoor exhaust accelerator, required when used with 030, 045 and 070 input models. Accelerator is not used with 090 or 110 input models. When using 1-1/2 in. piping, the pipe must be transitioned to 2 in. pipe when used with the Concentric Kit.

[4] Flush Mount Kit **51W11** and **51W12** includes 1-1/2 in. outdoor exhaust accelerator, required when used with 030, 045, 070 and 090 input models. Accelerator is not used with 110 input models. When using 1-1/2 in. piping, the pipe must be transitioned to 2 in. pipe when used with the Flush Mount Kit.

[5] Termination Kits **30G28**, **44W92**, **44W93**, **51W12** and **81J20** are certified to ULC S636 standard for use in Canada only.

STANDARD TERMINATION AT ELEVATION 0 - 4500 ft.

Pipe Size		1-1/2 in.					2 in.				2-1/2 in.				3 in.			
	Input	030	045	070	090	110	030/045	070	090	110	030/045	070	090	110	030/045	070	090	110
No. of 90 ELL	1	25	20	15	N/A	N/A	81	66	44	24	115	115	93	58	138	137	118	118
	2	20	15	10	N/A	N/A	76	61	39	19	110	110	88	53	133	132	113	113
	3	15	10	N/A	N/A	N/A	71	56	34	14	105	105	83	48	128	127	108	108
	4	10	N/A	N/A	N/A	N/A	66	51	29	N/A	100	100	78	43	123	122	103	103
	5	N/A	N/A	N/A	N/A	N/A	61	46	24	N/A	95	95	73	38	118	117	98	98
	6	N/A	N/A	N/A	N/A	N/A	56	41	19	N/A	90	90	68	33	113	112	93	93
	7	N/A	N/A	N/A	N/A	N/A	51	36	14	N/A	85	85	63	28	108	107	88	88
	8	N/A	N/A	N/A	N/A	N/A	46	31	N/A	N/A	80	80	58	23	103	102	83	83
	9	N/A	N/A	N/A	N/A	N/A	41	26	N/A	N/A	75	75	53	18	98	97	78	78
	10	N/A	N/A	N/A	N/A	N/A	36	21	N/A	N/A	70	70	48	13	93	92	73	73

STANDARD TERMINATION AT ELEVATION 4501 - 10,000 ft.

Pipe Size		1-1/2 in.					2 in.				2-1/2 in.				3 in.			
	Input	030	045	070	090	110	030/045	070	090	110	030/045	070	090	110	030/045	070	090	110
No. of 90 ELL	1	25	20	15	N/A	N/A	81	66	44	N/A	115	115	93	58	138	137	118	118
	2	20	15	10	N/A	N/A	76	61	39	N/A	110	110	88	53	133	132	113	113
	3	15	10	N/A	N/A	N/A	71	56	34	N/A	105	105	83	48	128	127	108	108
	4	10	N/A	N/A	N/A	N/A	66	51	29	N/A	100	100	78	43	123	122	103	103
	5	N/A	N/A	N/A	N/A	N/A	61	46	24	N/A	95	95	73	38	118	117	98	98
	6	N/A	N/A	N/A	N/A	N/A	56	41	19	N/A	90	90	68	33	113	112	93	93
	7	N/A	N/A	N/A	N/A	N/A	51	36	14	N/A	85	85	63	28	108	107	88	88
	8	N/A	N/A	N/A	N/A	N/A	46	31	N/A	N/A	80	80	58	23	103	102	83	83
	9	N/A	N/A	N/A	N/A	N/A	41	26	N/A	N/A	75	75	53	18	98	97	78	78
	10	N/A	N/A	N/A	N/A	N/A	36	21	N/A	N/A	70	70	48	13	93	92	73	73

CONCENTRIC TERMINATION ELEVATION 0 - 4500 ft.

Pipe Size		1-1/2 in.					2 in.				2-1/2 in.				3 in.			
	Input	030	045	070	090	110	030/045	070	090	110	030/045	070	090	110	030/045	070	090	110
No. of 90 ELL	1	20	15	10	N/A	N/A	73	58	42	22	105	105	89	54	121	121	114	114
	2	15	10	N/A	N/A	N/A	68	53	37	17	100	100	84	49	116	116	109	109
	3	10	N/A	N/A	N/A	N/A	63	48	32	12	95	95	79	44	111	111	104	104
	4	N/A	N/A	N/A	N/A	N/A	58	43	27	N/A	90	90	74	39	106	106	99	99
	5	N/A	N/A	N/A	N/A	N/A	53	38	22	N/A	85	85	69	34	101	101	94	94
	6	N/A	N/A	N/A	N/A	N/A	48	33	17	N/A	80	80	64	29	96	96	89	89
	7	N/A	N/A	N/A	N/A	N/A	43	28	12	N/A	75	75	59	24	91	91	84	84
	8	N/A	N/A	N/A	N/A	N/A	38	23	N/A	N/A	70	70	54	19	86	86	79	79
	9	N/A	N/A	N/A	N/A	N/A	33	18	N/A	N/A	65	65	49	14	81	81	74	74
	10	N/A	N/A	N/A	N/A	N/A	28	13	N/A	N/A	60	60	44	N/A	76	76	69	69

CONCENTRIC TERMINATION ELEVATION 4501 - 10,000 ft.

Pipe Size		1-1/2 in.					2 in.				2-1/2 in.				3 in.			
	Input	030	045	070	090	110	030/045	070	090	110	030/045	070	090	110	030/045	070	090	110
No. of 90 ELL	1	20	15	10	N/A	N/A	73	58	42	N/A	105	105	89	54	121	121	114	114
	2	15	10	N/A	N/A	N/A	68	53	37	N/A	100	100	84	49	116	116	109	109
	3	10	N/A	N/A	N/A	N/A	63	48	32	N/A	95	95	79	44	111	111	104	104
	4	N/A	N/A	N/A	N/A	N/A	58	43	27	N/A	90	90	74	39	106	106	99	99
	5	N/A	N/A	N/A	N/A	N/A	53	38	22	N/A	85	85	69	34	101	101	94	94
	6	N/A	N/A	N/A	N/A	N/A	48	33	17	N/A	80	80	64	29	96	96	89	89
	7	N/A	N/A	N/A	N/A	N/A	43	28	12	N/A	75	75	59	24	91	91	84	84
	8	N/A	N/A	N/A	N/A	N/A	38	23	N/A	N/A	70	70	54	19	86	86	79	79
	9	N/A	N/A	N/A	N/A	N/A	33	18	N/A	N/A	65	65	49	14	81	81	74	74
	10	N/A	N/A	N/A	N/A	N/A	28	13	N/A	N/A	60	60	44	N/A	76	76	69	69

NOTES - Additional vent pipe and elbows used to terminate vent pipe outside the structure must be included in the total vent length calculation.
Intake and exhaust pipes are sized separately.
Values in table are for separate intake or exhaust pipe lengths.
Both intake and exhaust pipe must be the same size diameter.

VENT LENGTHS EXHAUST USING VENTILATED ATTIC/CRAWLSPACE INTAKE AIR

STANDARD TERMINATION AT ELEVATION 0 - 4500 ft.

Pipe Size		1-1/2 in.						2 in.					2-1/2 in.					3 in.				
	Input	030	045	070	090	110	135	030/045	070	090	110	135	030/045	070	090	110	135	030/045	070	090	110	135
No. of 90 ELL	1	20	15	10	N/A	N/A	N/A	71	56	34	14	N/A	100	100	78	43	N/A	118	117	98	98	N/A
	2	15	10	n/a	N/A	N/A	N/A	66	51	29	9	N/A	95	95	73	38	N/A	113	112	93	93	N/A
	3	10	N/A	N/A	N/A	N/A	N/A	61	46	24	4	N/A	90	90	68	33	N/A	108	107	88	88	N/A
	4	N/A	N/A	N/A	N/A	N/A	N/A	56	41	19	N/A	N/A	85	85	63	28	N/A	103	102	83	83	N/A
	5	N/A	N/A	N/A	N/A	N/A	N/A	51	36	14	N/A	N/A	80	80	58	23	N/A	98	97	78	78	N/A
	6	N/A	N/A	N/A	N/A	N/A	N/A	46	31	9	N/A	N/A	75	75	53	18	N/A	93	92	73	73	N/A
	7	N/A	N/A	N/A	N/A	N/A	N/A	41	26	4	N/A	N/A	70	70	48	13	N/A	88	87	68	68	N/A
	8	N/A	N/A	N/A	N/A	N/A	N/A	36	21	N/A	N/A	N/A	65	65	43	8	N/A	83	82	63	63	N/A
	9	N/A	N/A	N/A	N/A	N/A	N/A	31	16	N/A	N/A	N/A	60	60	38	3	N/A	78	77	58	58	N/A
	10	N/A	N/A	N/A	N/A	N/A	N/A	26	11	N/A	N/A	N/A	55	55	33	N/A	N/A	73	72	53	53	N/A

STANDARD TERMINATION AT ELEVATION 4501 - 10,000 ft.

Pipe Size		1-1/2 in.						2 in.					2-1/2 in.					3 in.				
	Input	030	045	070	090	110	135	030/045	070	090	110	135	030/045	070	090	110	135	030/045	070	090	110	135
No. of 90 ELL	1	20	15	10	N/A	N/A	N/A	71	56	34	N/A	N/A	100	100	78	43	N/A	118	117	98	98	N/A
	2	15	10	n/a	N/A	N/A	N/A	66	51	29	N/A	N/A	95	95	73	38	N/A	113	112	93	93	N/A
	3	10	N/A	N/A	N/A	N/A	N/A	61	46	24	N/A	N/A	90	90	68	33	N/A	108	107	88	88	N/A
	4	N/A	N/A	N/A	N/A	N/A	N/A	56	41	19	N/A	N/A	85	85	63	28	N/A	103	102	83	83	N/A
	5	N/A	N/A	N/A	N/A	N/A	N/A	51	36	14	N/A	N/A	80	80	58	23	N/A	98	97	78	78	N/A
	6	N/A	N/A	N/A	N/A	N/A	N/A	46	31	9	N/A	N/A	75	75	53	18	N/A	93	92	73	73	N/A
	7	N/A	N/A	N/A	N/A	N/A	N/A	41	26	4	N/A	N/A	70	70	48	13	N/A	88	87	68	68	N/A
	8	N/A	N/A	N/A	N/A	N/A	N/A	36	21	N/A	N/A	N/A	65	65	43	8	N/A	83	82	63	63	N/A
	9	N/A	N/A	N/A	N/A	N/A	N/A	31	16	N/A	N/A	N/A	60	60	38	3	N/A	78	77	58	58	N/A
	10	N/A	N/A	N/A	N/A	N/A	N/A	26	11	N/A	N/A	N/A	55	55	33	N/A	N/A	73	72	53	53	N/A

NOTE - Additional vent pipe and elbows used to terminate vent pipe outside the structure must be included in the total vent length calculation.

VENT LENGTHS — UNINSULATED EXHAUST PIPE IN UNCONDITIONED SPACE

[1] Winter Design Temperatures	Vent Pipe Diameter	Unit Input Size									
		030		045		070		090		110	
		Maximum Uninsulated Exhaust Vent Length (ft.)									
		PVC	PolyPro InnoFlue	PVC	PolyPro InnoFlue	PVC	PolyPro InnoFlue	PVC	PolyPro InnoFlue	PVC	PolyPro InnoFlue
32 to 21°F	1-1/2 in.	N/A	N/A	25	N/A	20	N/A	N/A	N/A	N/A	N/A
	2 in.	N/A	N/A	18	16	31	28	50	48	30	30
	2-1/2 in.	N/A	N/A	13	N/A	24	N/A	42	N/A	56	N/A
	3 in.	N/A	N/A	9	9	18	18	35	35	47	47
20 to 1°F	1-1/2 in.	N/A	N/A	15	N/A	20	N/A	N/A	N/A	N/A	N/A
	2 in.	N/A	N/A	9	8	18	16	32	29	30	30
	2-1/2 in.	N/A	N/A	5	N/A	13	N/A	24	N/A	34	N/A
	3 in.	N/A	N/A	N/A	N/A	8	8	19	19	26	26
0 to –20°F	1-1/2 in.	N/A	N/A	10	N/A	15	N/A	N/A	N/A	N/A	N/A
	2 in.	N/A	N/A	5	N/A	12	10	22	19	30	27
	2-1/2 in.	N/A	N/A	N/A	N/A	7	N/A	15	N/A	22	N/A
	3 in.	N/A	N/A	N/A	N/A	N/A	N/A	10	10	16	16

NOTE - Concentric terminations are equivalent to 5 ft. of straight pipe and should be included when measuring total pipe length.

NOTE - Each elbow is equivalent to 5 ft. of straight pipe and should be included when measuring total pipe length.

[1] Refer to 99% Minimum Design Temperature table provided in the current edition of the ASHRAE Handbook-Fundamentals.

PolyPro® poly-propylene vent pipe is a registered trademark of DuraVent®.

Innoflue® is a registered trademark of Centrotherm Eco Systems.

BLOWER DATA

EL196UH030XE36B PERFORMANCE (Less Filter)

External Static Pressure in. w.g.	Air Volume / Watts at Various Blower Speeds									
	High (Black)		Medium-High (Brown)		Medium (Blue)		Medium-Low (Yellow)		Low (Red)	
	cfm	Watts	cfm	Watts	cfm	Watts	cfm	Watts	cfm	Watts
0.00	1402	332	1138	190	979	121	801	68	904	94
0.10	1374	346	1109	198	940	130	743	75	725	75
0.20	1346	360	1080	206	902	138	684	82	546	56
0.30	1321	370	1047	217	866	149	633	90	465	60
0.40	1295	384	1012	228	834	155	589	96	408	67
0.50	1265	395	985	235	794	165	540	107	351	72
0.60	1224	396	956	247	760	175	500	110	306	79
0.70	1152	379	929	256	730	180	453	120	266	84
0.80	1088	353	894	267	673	192	413	125	224	89
0.90	914	304	855	273	644	200	374	132	- - -	- - -
1.00	755	262	694	243	607	208	- - -	- - -	- - -	- - -

EL196UH045XE36B PERFORMANCE (Less Filter)

External Static Pressure in. w.g.	Air Volume / Watts at Various Blower Speeds									
	High (Black)		Medium-High (Brown)		Medium (Blue)		Medium-Low (Yellow)		Low (Red)	
	cfm	Watts	cfm	Watts	cfm	Watts	cfm	Watts	cfm	Watts
0.00	1420	351	1267	245	1177	187	958	107	904	90
0.10	1393	360	1231	257	1140	201	910	115	857	99
0.20	1365	369	1195	268	1104	215	861	122	810	109
0.30	1333	383	1166	281	1070	224	826	132	760	118
0.40	1304	396	1140	293	1039	231	784	141	722	125
0.50	1254	392	1116	302	1002	246	728	149	673	131
0.60	1191	380	1089	311	969	255	687	157	625	141
0.70	1115	354	1047	324	941	265	651	165	582	147
0.80	987	318	976	311	906	273	601	170	537	155
0.90	858	282	859	283	835	268	555	181	489	161
1.00	713	251	703	248	713	243	497	189	444	168

EL196UH070XE36B PERFORMANCE (Less Filter)

External Static Pressure in. w.g.	Air Volume / Watts at Various Blower Speeds									
	High (Black)		Medium-High (Brown)		Medium (Blue)		Medium-Low (Yellow)		Low (Red)	
	cfm	Watts	cfm	Watts	cfm	Watts	cfm	Watts	cfm	Watts
0.00	1433	334	1295	247	1187	187	956	110	917	93
0.10	1404	347	1256	256	1145	196	913	114	864	98
0.20	1374	361	1218	266	1102	206	870	119	811	103
0.30	1350	370	1192	278	1081	216	821	131	766	114
0.40	1319	384	1157	290	1043	225	780	136	721	123
0.50	1286	399	1133	300	1008	241	744	145	680	133
0.60	1241	393	1104	312	982	249	702	153	637	138
0.70	1169	373	1066	321	946	261	658	163	601	148
0.80	1064	341	1013	315	914	269	616	172	552	152
0.90	925	310	857	279	860	272	581	178	514	160
1.00	753	261	705	244	754	253	515	191	478	167

BLOWER DATA

EL196UH090XE48C PERFORMANCE (Less Filter)

External Static Pressure in. w.g.	Air Volume / Watts at Various Blower Speeds									
	High (Black)		Medium-High (Brown)		Medium (Blue)		Medium-Low (Yellow)		Low (Red)	
	cfm	Watts	cfm	Watts	cfm	Watts	cfm	Watts	cfm	Watts
0.00	1723	379	1511	248	1389	191	1302	169	1194	136
0.10	1684	395	1480	264	1356	209	1269	180	1147	142
0.20	1645	410	1448	281	1323	226	1236	191	1101	149
0.30	1626	422	1414	295	1294	238	1195	204	1070	162
0.40	1593	435	1381	307	1245	253	1158	213	1022	172
0.50	1564	451	1347	322	1210	261	1120	225	983	182
0.60	1529	465	1308	335	1175	274	1084	237	943	193
0.70	1481	463	1288	346	1143	288	1039	250	897	204
0.80	1395	442	1247	359	1103	297	1003	262	860	214
0.90	1290	412	1211	369	1067	309	960	272	813	225
1.00	1123	361	1097	351	1011	319	917	281	772	230

EL196UH110XE60C PERFORMANCE (Less Filter)

External Static Pressure in. w.g.	Air Volume / Watts at Different Blower Speeds																			
	Bottom Return Air, Side Return Air with Return Air from Both Sides or Return Air from Bottom and One Side.										**Single Side Return Air** - Air volumes in **bold** (over 1800 cfm) require Optional Return Air Base and field fabricated transition to accommodate 20 x 25 x 1 in. air filter in order to maintain proper air velocity.									
	High (Black)		Medium-High (Brown)		Medium (Blue)		Medium-Low (Yellow)		Low (Red)		High (Black)		Medium-High (Brown)		Medium (Blue)		Medium-Low (Yellow)		Low (Red)	
	cfm	Watts	cfm	Watts	cfm	Watts	cfm	Watts	cfm	Watts	cfm	Watts	cfm	Watts	cfm	Watts	cfm	Watts	cfm	Watts
0.00	2197	640	1964	429	1791	330	1658	277	1488	210	**2122**	**634**	**1892**	**424**	1722	333	1635	266	1452	194
0.10	2160	658	1911	446	1742	346	1620	291	1438	220	**2093**	**644**	**1858**	**438**	1688	341	1590	281	1410	205
0.20	2124	676	1858	464	1693	361	1582	306	1388	230	**2064**	**655**	**1824**	**451**	1653	349	1546	296	1367	216
0.30	2084	688	1822	477	1658	373	1536	314	1336	239	**2033**	**669**	1788	467	1619	363	1511	306	1321	228
0.40	2051	703	1797	492	1615	386	1497	328	1288	250	**1996**	**686**	1749	482	1580	376	1473	322	1275	239
0.50	2024	718	1754	508	1581	397	1452	342	1247	261	**1971**	**704**	1709	498	1543	392	1436	330	1230	251
0.60	1993	734	1716	519	1537	413	1414	353	1203	270	**1941**	**720**	1676	512	1503	403	1387	347	1184	262
0.70	1942	742	1680	535	1500	423	1381	361	1157	277	**1903**	**734**	1644	524	1468	419	1351	356	1140	271
0.80	1877	721	1644	547	1465	434	1342	372	1121	288	**1855**	**732**	1606	542	1424	430	1313	369	1105	282
0.90	1789	693	1614	563	1423	450	1294	386	1061	300	1780	707	1571	554	1386	443	1273	380	1061	293
1.00	1696	654	1580	573	1395	461	1267	396	1014	310	1675	670	1535	569	1352	456	1238	392	1019	302

[1] NOTE - 60C size units that require air volumes over 1800 cfm must have one of the following:
1. Single side return air and Optional Return Air Base with transition that must accommodate required 20 x 25 x 1 inch (508 x 635 x 25 mm) air filter to maintain proper velocity.
2. Bottom return air.
3. Return air from both sides.
4. Bottom and one side return air.

See Blower Performance Tables for additional information.

[2] Optional Side Return Air Filter Kit is not for use with the Optional Return Air Base.

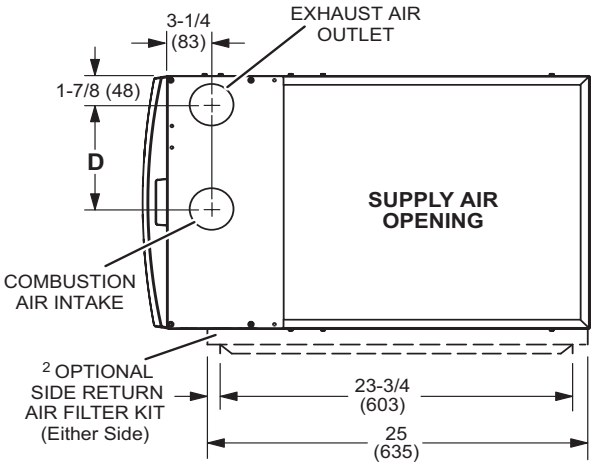

TOP VIEW

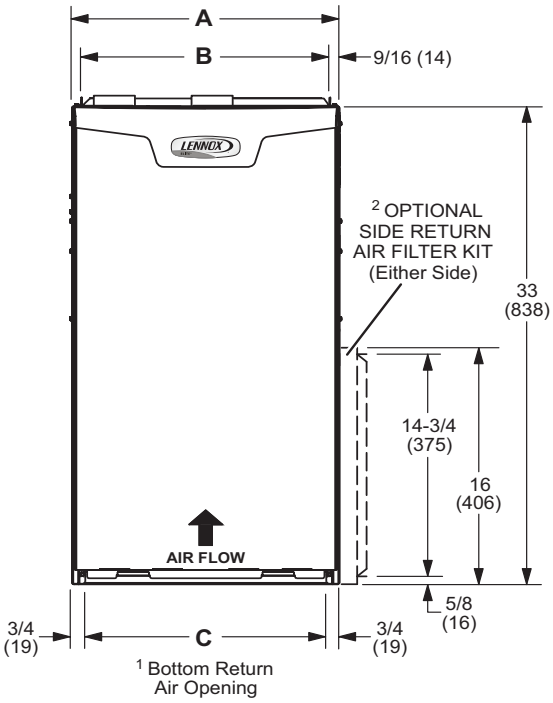

FRONT VIEW

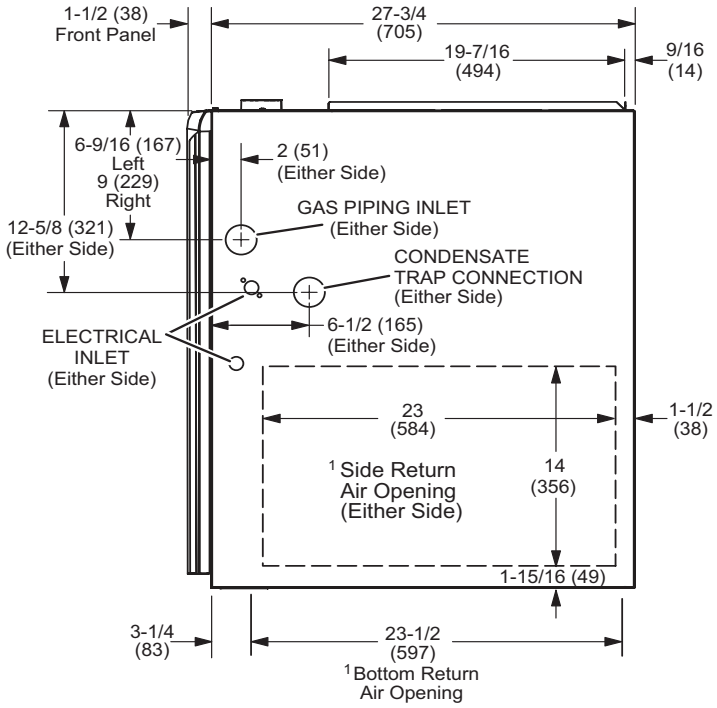

SIDE VIEW

Model No.	A		B		C		D	
	in.	mm	in.	mm	in.	mm	in.	mm
EL196UH030XE36B EL196UH045XE36B EL196UH070XE36B	17-1/2	446	16-3/8	416	16	406	7-5/8	194
EL196UH090XE48C EL196UH110XE60C	21	533	19-7/8	505	19-1/2	495	9-3/8	238

LEFT-HAND AIR DISCHARGE

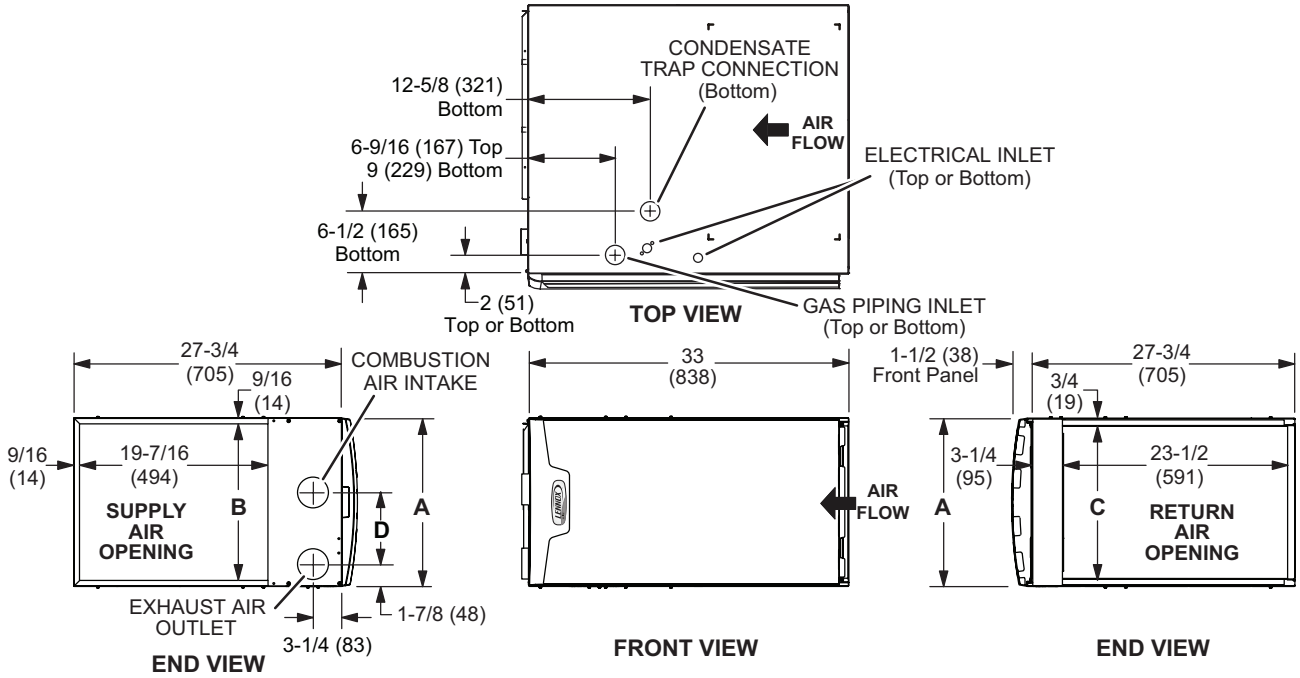

RIGHT-HAND AIR DISCHARGE

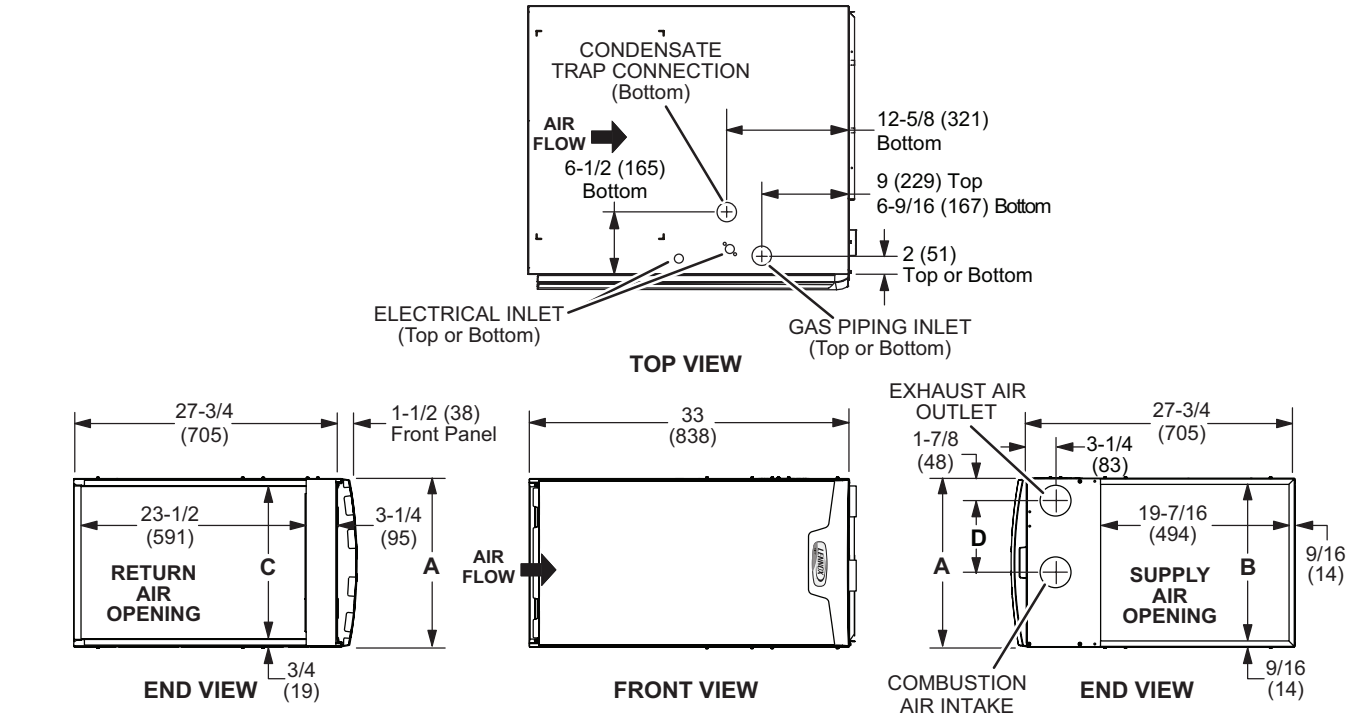

Model No.	A		B		C		D	
	in.	mm	in.	mm	in.	mm	in.	mm
EL196UH030XE36B EL196UH045XE36B EL196UH070XE36B	17-1/2	446	16-3/8	416	16	406	7-5/8	194
EL196UH090XE48C EL196UH110XE60C	21	533	19-7/8	505	19-1/2	495	9-3/8	238

HORIZONTAL (END) FILTER KIT

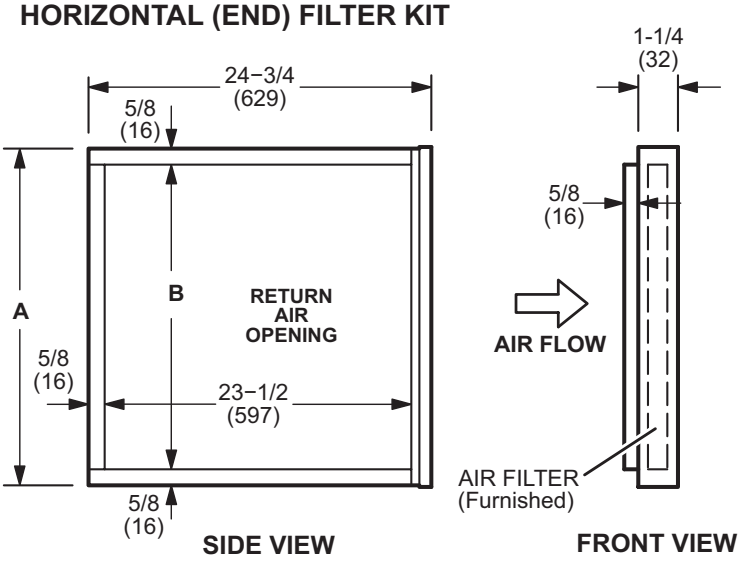

Furnace Cabinet Width	Catalog Number	A		B	
		in.	mm	in.	mm
B	87L96	18	457	16-3/4	425
C	87L97	21	533	18-3/4	476

OPTIONAL RETURN AIR BASE

(Upflow Applications Only - For use with B and C width cabinets)

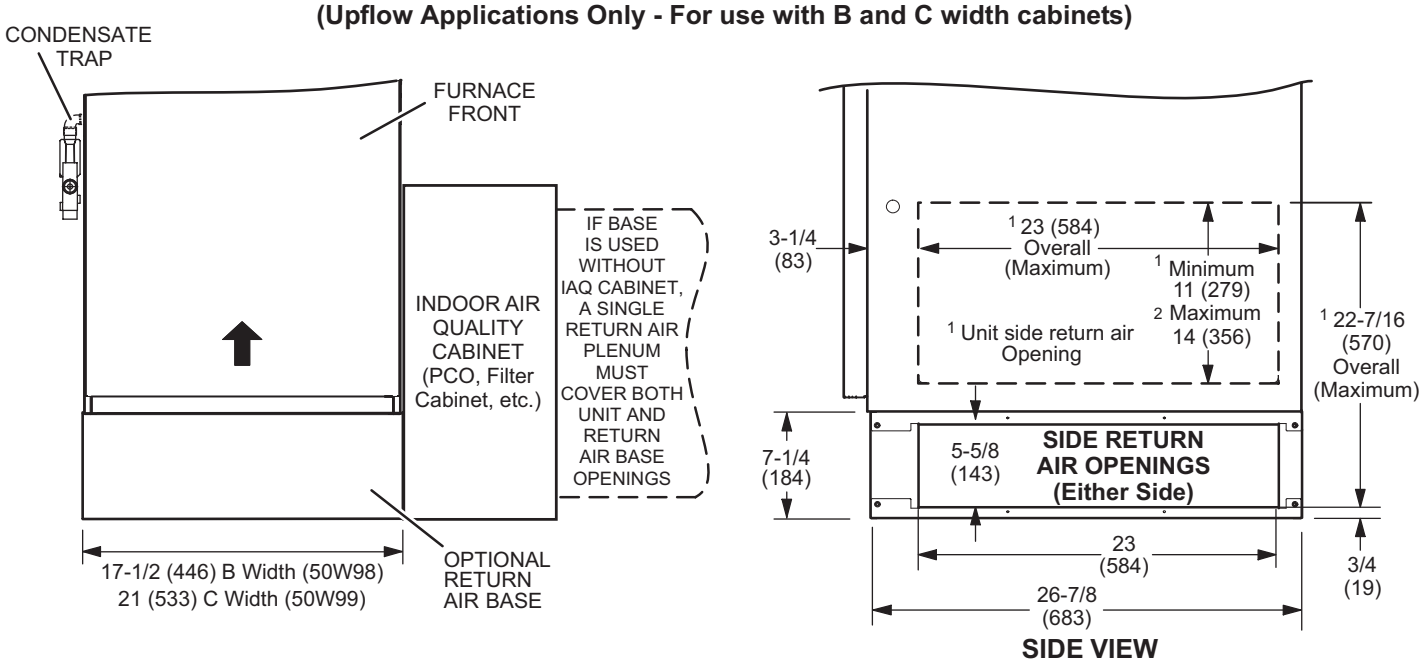

NOTE- Optional Side Return Air Filter Kits are not for use with Optional Return Air Base.

[1] Both the unit return air opening and the base return air opening must be covered by a single plenum or IAQ cabinet. Minimum unit side return air opening dimensions for units requiring 1800 cfm or more of air (W x H): 23 x 11 in. (584 x 279 mm). The opening can be cut as needed to accommodate plenum or IAQ cabinet while maintaining dimensions shown. Side return air openings must be cut in the field. There are cutting guides stenciled on the cabinet for the side return air opening. The size of the opening must not extend beyond the markings on the furnace cabinet.

[2] To minimize pressure drop, the largest opening height possible, up to 14 in. (356 mm), is preferred.

FLUSH-MOUNT VENT TERMINATION KIT 51W11 (US) or 51W12 (CANADA)

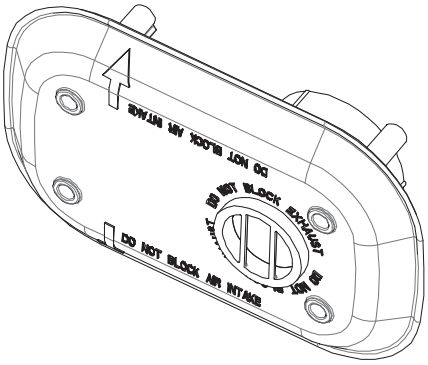

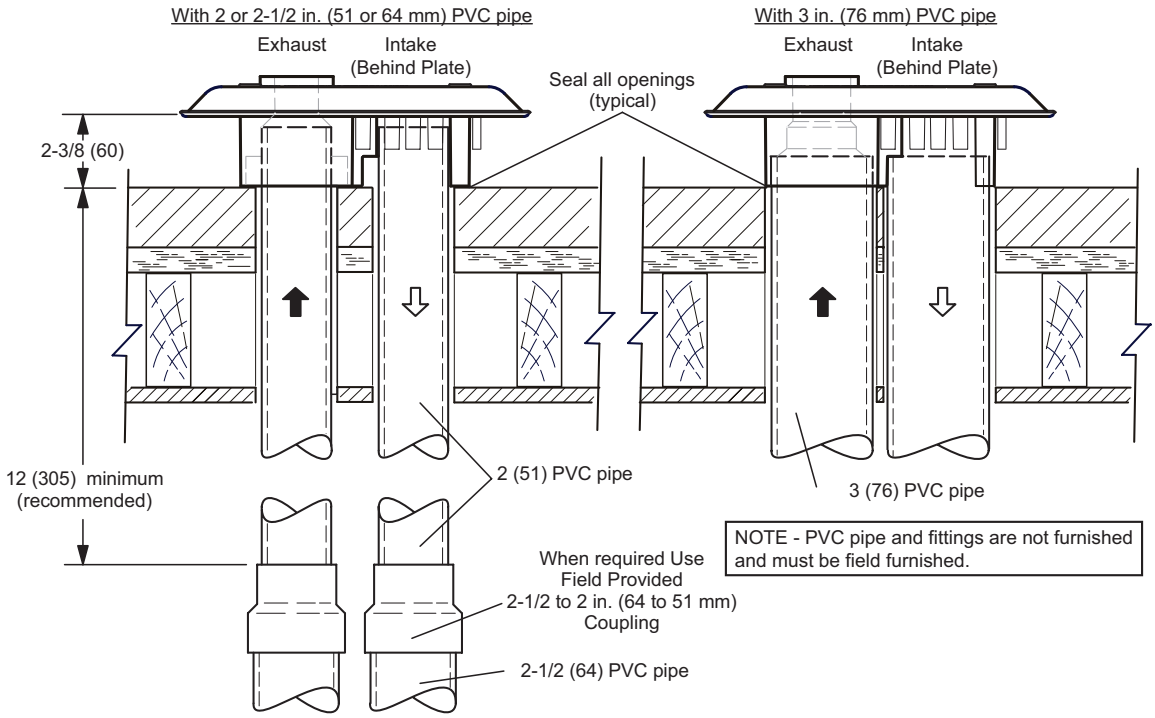

NOTE - PVC pipe and fittings are not furnished and must be field furnished.

MUFFLERS
15Y66 - 2-inch
16A56 - 3-inch

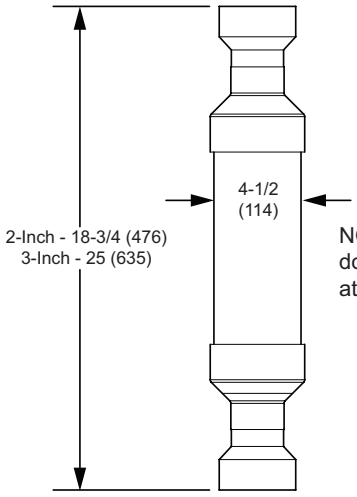

(Installed Vertically in the Exhaust Pipe)

NOTE - Two-inch mufflers do not have reducers at each end.

CONCENTRIC WALL TERMINATION APPLICATIONS

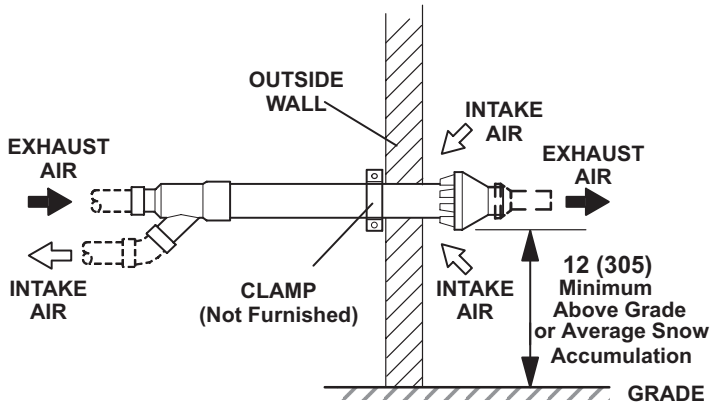

CONCENTRIC ROOF TERMINATION APPLICATIONS

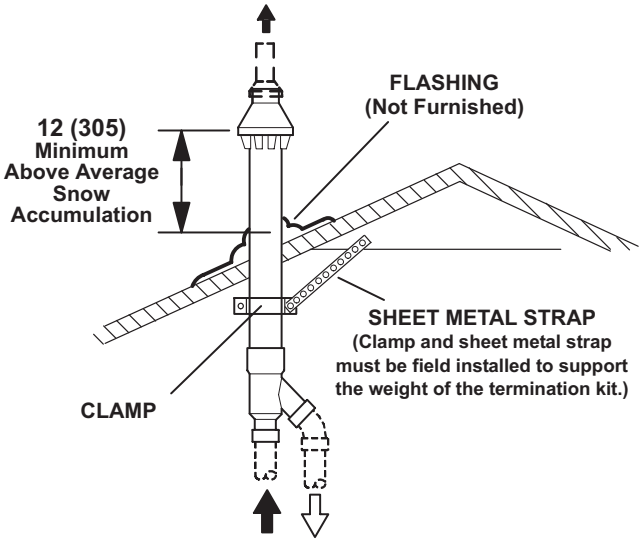

71M80 / 69M29 / 44W92 − 2 inch kits
60L46 / 44W93 − 3 inch kits
See Installation Instructions for additional information.

Note - Field provided reducer may be required to adapt different vent pipe sizes to termination.

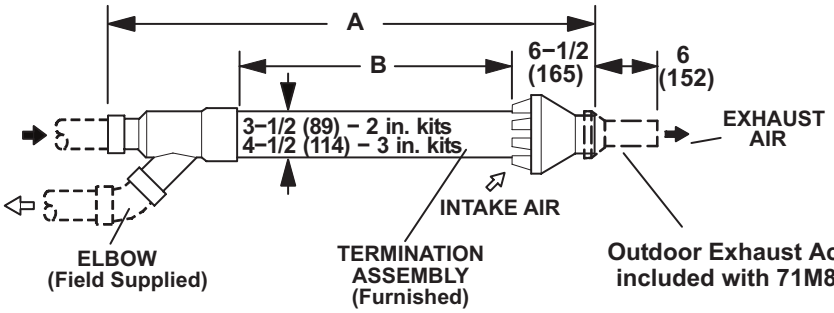

Cat. No.	A		B	
	in.	mm	in.	mm
71M80 69M29	33−3/8	848	16−3/4	425
44W92 (Canada)	29	737	15−1/2	394
60L46	38−7/8	987	21−3/16	538
44W93 (Canada)	36−1/8	918	19−1/2	495

NOTE − Typical illustration for dimensions only. Design may vary depending on kit ordered.

WALL TERMINATION KITS (CLOSE-COUPLE)
EXTENDED VENT FOR GRADE CLEARANCE
2 inch (51 mm) 22G44 (US)
3 inch (76 mm) 44J40 (US)
See Installation Instructions for additional information.

Note - Field provided reducer may be required to adapt different vent pipe sizes to termination.

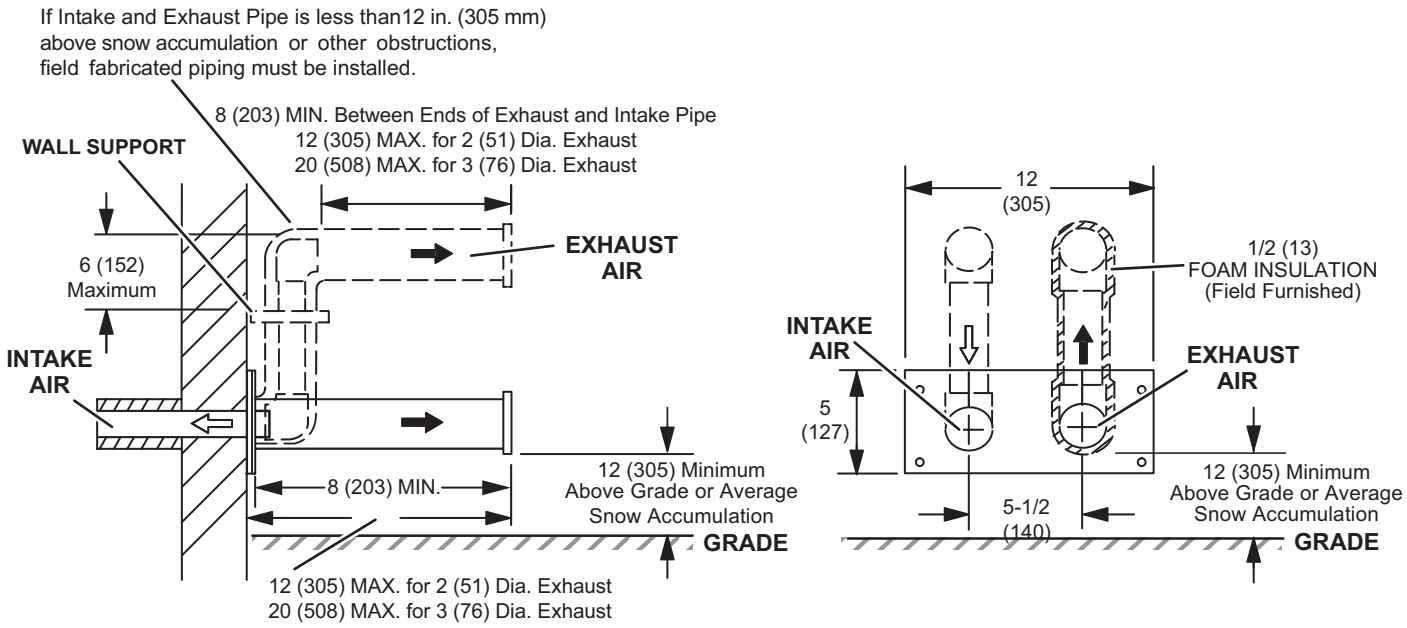

WALL TERMINATION KITS (CLOSE-COUPLE)
EXTENDED VENT FOR GRADE CLEARANCE
2 inch (51 mm) 30G28 (WTK Canada)
3 inch (76 mm) 81J20 (WTK Canada)
See Installation Instructions for additional information.

Note - Field provided reducer may be required to adapt different vent pipe sizes to termination.

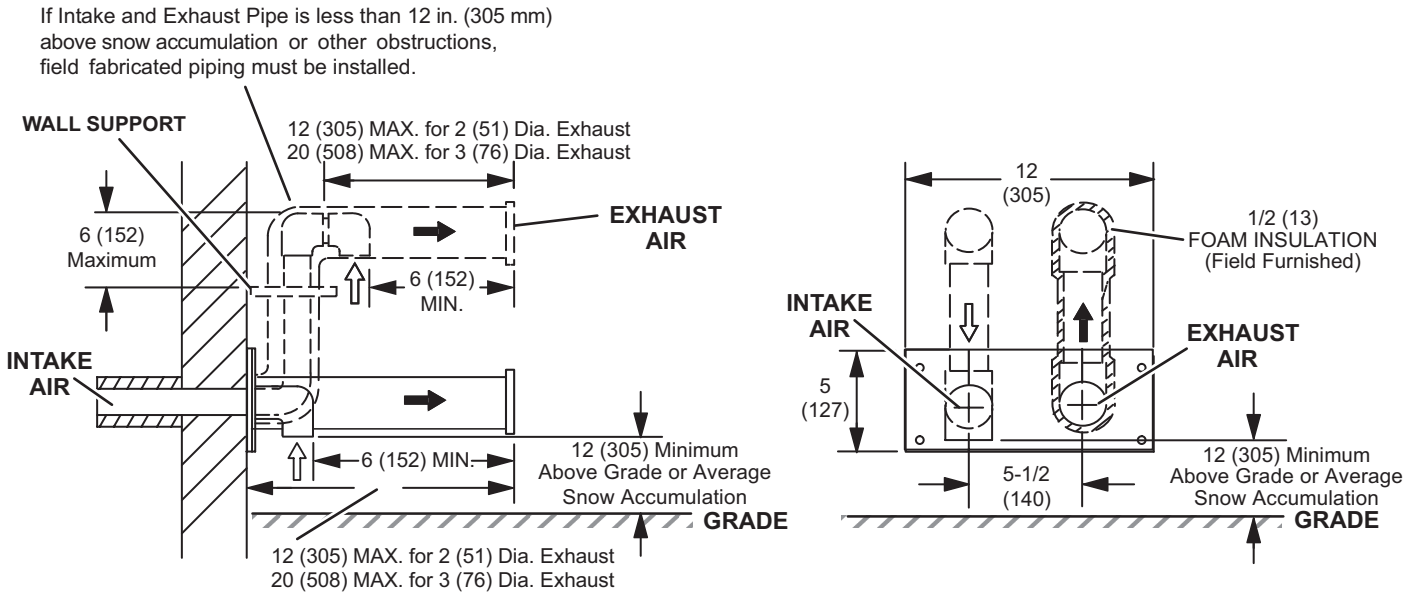

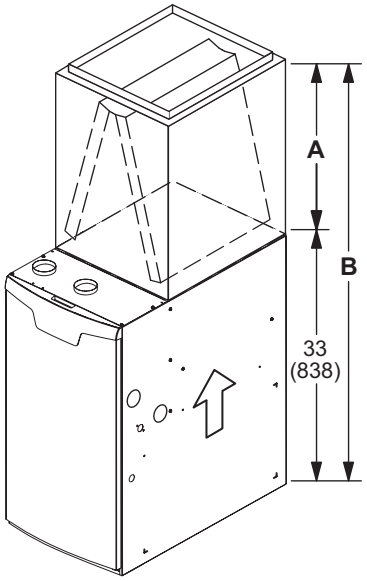

UPFLOW POSITION - CASED

Model		A		B	
CK40CT	**C35/CX35**	**in.**	**mm**	**in.**	**mm**
CK40CT-18/24B	C35/CX35-18/24B	16-1/2	419	49-1/2	1257
CK40CT-24B	C35/CX35-24B	18-1/2	470	51-1/2	1308
CK40CT-30B	C35/CX35-30B	22-1/2	572	55-1/2	1410
CK40CT-30/36B CK40CT-30/36C	C35/CX35-30/36B C35/CX35-30/36C	24-1/2	622	57-1/2	1461
CK40CT-36B	C35/CX35-36B	24-1/2	622	57-1/2	1461
CK40CT-48B CK40CT-48C	C35/CX35-48B C35/CX35-48C	27-1/2	699	60-1/2	1537
CK40CT-49C	C35/CX35-49C	29-1/2	749	62-1/2	1588
CK40CT-50/60C	C35/CX35-50/60C	27-1/2	699	60-1/2	1537
CK40CT-60C	CX35-60C	31-1/2	800	64-1/2	1638

UPFLOW POSITION - UNCASED

Model		A		B	
CK40UT	**C35**	**in.**	**mm**	**in.**	**mm**
CK40UT-18/24B	C35-18/24B	14-1/8	359	47-1/8	1197
CK40UT-24B	C35-24B	16-3/8	416	49-3/8	1254
CK40UT-30B	C35-30B	20-3/4	527	53-3/4	1365
CK40UT-30/36B CK40UT-30/36C	C35-30/36B C35-30/36C	22-1/4	565	55-1/4	1403
CK40UT-36B	C35-36B	22-3/8	568	55-3/8	1407
CK40UT-48B CK40UT-48C	C35-48B C35-48C	26-1/4	667	59-1/4	1505
CK40UT-49C	C35-49C	28-1/2	724	61-1/2	1562
CK40UT-50/60C	C35-50/60C	25-7/8	657	58-7/8	1495
CK40UT-60C	C35-60C	30-5/8	778	63-5/8	1616

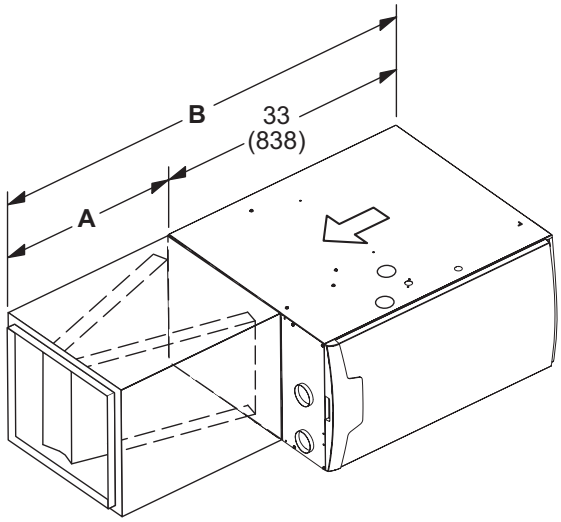

HORIZONTAL POSITION

Model		A		B	
CK40HT	**CHX35**	**in.**	**mm**	**in.**	**mm**
CK40HT-24B CK40HT-30B CK40HT-36B CK40HT-36C CK40HT-42C CK40HT-48C	CHX35-24B CHX35-30B CHX35-36B CHX35-36C CHX35-42C CHX35-48C	26-1/2	673	59-1/2	1511
CK40CT-42B CK40CT-48B CK40CT-51C	CHX35-42B CHX35-48B CHX35-51C	31-1/2	880	64-1/2	1638

REVISIONS

Sections	Description of Change
Approvals	Updated ENERGY STAR® usage.

Visit us at www.Lennox.com
For the latest technical information, www.LennoxPros.com
Contact us at 1-800-9-LENNOX

NOTE - Due to Lennox' ongoing commitment to quality, Specifications, Ratings and Dimensions subject to change without notice and without incurring liability.
Improper installation, adjustment, alteration, service or maintenance can cause property damage or personal injury.
Installation and service must be performed by a qualified installer and servicing agency.

©2026 Lennox Industries, Inc.