J / P	JACK / PLUG DESCRIPTION
P18	PLUG, EXHAUST FAN COMP
P24	PLUG, EXHAUST FAN
P47	PLUG, OUTDOOR FAN 1
P52	PLUG, OUTDOOR FAN 2
P86	PLUG, OUTDOOR FAN INTERFACE
P87	PLUG, OUTDOOR FAN INTERFACE 2
P106	PLUG, OUTDOOR FAN 3
P107	PLUG, OUTDOOR FAN 4
P108	PLUG, OUTDOOR FAN 5
P109	PLUG, OUTDOOR FAN 6
P118	PLUG, COMPRESSOR 3 AND 4, CONTROL
P119	PLUG, COMPRESSOR 3 AND 4, INPUT
P132	PLUG, EXHAUST FAN MOTOR 1
P133	PLUG, EXHAUST FAN MOTOR 2
P134	PLUG, EXHAUST FAN MOTOR 3
P194	PLUG, INPUT, OUTPUT, A133
P246	PLUG, POWER TO VFD
P247	PLUG, VFD TO MOTOR
P248	PLUG, VFD TO CONTROL
P263	PLUG, HIGH AND LOW PRESSURE SWITCHES
P264	PLUG, BLOWER DECK
P265	PLUG, CONTACTORS AND RELAYS
P267	PLUG, OUTDOOR FAN AREA
P268	PLUG, TRANSFORMERS

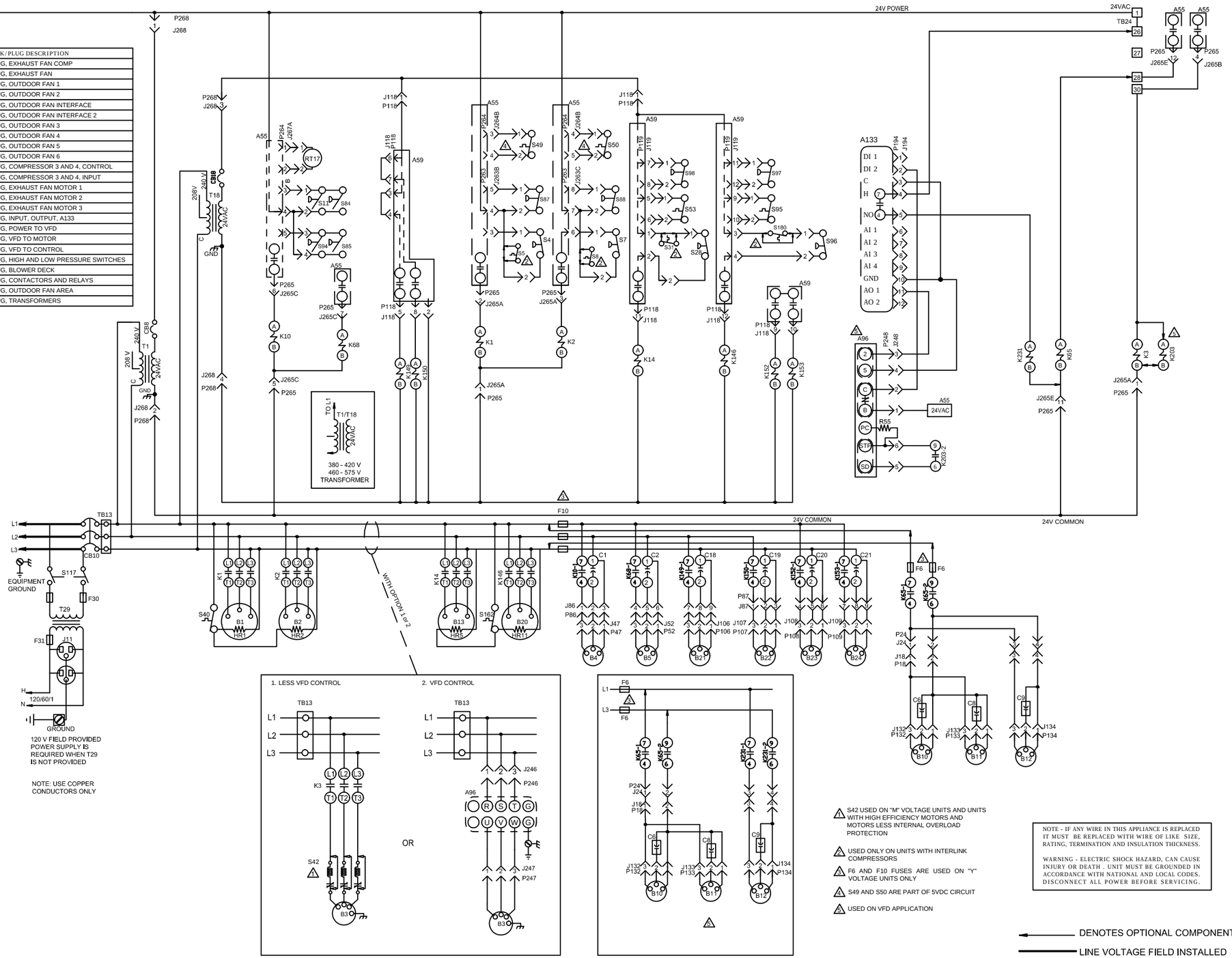

NOTE - IF ANY WIRE IN THIS APPLIANCE IS REPLACED IT MUST BE REPLACED WITH WIRE OF LIKE SIZE, RATING, TERMINATION AND INSULATION THICKNESS.

WARNING - ELECTRIC SHOCK HAZARD, CAN CAUSE INJURY OR DEATH . UNIT MUST BE GROUNDED IN ACCORDANCE WITH NATIONAL AND LOCAL CODES. DISCONNECT ALL POWER BEFORE SERVICING.

KEY	COMPONENT
A55	CONTROL BOARD, MAIN
A59	PANEL, COMPRESSORS 3 AND 4
A96	CONTROL INVERTER
A133	CONTROL, GENERAL PURPOSE
B1	COMPRESSOR 1
B2	COMPRESSOR 2
B3	MOTOR, BLOWER
B4	MOTOR, OUTDOOR FAN 1
B5	MOTOR, OUTDOOR FAN 2
B10	MOTOR, EXHAUST FAN 1
B11	MOTOR, EXHAUST FAN 2
B12	MOTOR, EXHAUST FAN 3
B13	COMPRESSOR 3
B20	COMPRESSOR 4
B21	MOTOR, OUTDOOR FAN 3
B22	MOTOR, OUTDOOR FAN 4
B23	MOTOR, OUTDOOR FAN 5
B24	MOTOR, OUTDOOR FAN 6
C1	CAPACITOR, OUTDOOR FAN 1
C2	CAPACITOR, OUTDOOR FAN 2
C6	CAPACITOR, EXHAUST FAN 1
C8	CAPACITOR, EXHAUST FAN 2
C9	CAPACITOR, EXHAUST FAN 3
C18	CAPACITOR, OUTDOOR FAN 3
C19	CAPACITOR, OUTDOOR FAN 4
C20	CAPACITOR, OUTDOOR FAN 5
C21	CAPACITOR, OUTDOOR FAN 6
CB8	CIRCUIT, BREAKER T1
CB10	CIRCUIT BREAKER, MAIN DISCONNECT UNIT
CB18	CIRCUIT, BREAKER T18
F6	FUSE, EXHAUST FAN
F10	FUSE, OUTDOOR FAN MOTOR
F30	FUSE, TRANSFORMER T29 PRIMARY
F31	FUSE, TRANSFORMER T29 SECONDARY
HR1	HEATER COMPRESSOR 1
HR2	HEATER COMPRESSOR 2
HR5	HEATER COMPRESSOR 3
HR11	HEATER COMPRESSOR 4
J11	JACK, GFI, RECEPTACLE
K1	CONTACTOR, COMPRESSOR 1
K2	CONTACTOR, COMPRESSOR 2
K3	CONTACTOR, BLOWER
K10	RELAY, OUTDOOR FAN 1
K14	CONTACTOR, COMPRESSOR 3
K65	RELAY, EXHAUST FAN
K68	RELAY, OUTDOOR FAN 2
K146	CONTACTOR, COMPRESSOR 4
K149	RELAY, OUTDOOR FAN 3
K150	RELAY, OUTDOOR FAN 4
K152	RELAY, OUTDOOR FAN 5
K153	RELAY, OUTDOOR FAN 6
K203	RELAY INVERTER CONTROL
K231	RELAY, EXHAUST FAN 3
R55	RESISTOR, VFD LOADING, A96
RT17	SENSOR, OUTDOOR AIR
S4	SWITCH, LIMIT HI PRESS COMPRESS 1
S5	SWITCH, LIMIT HI TEMP COMPRESS 1
S7	SWITCH, LIMIT HI PRESS COMPRESS 2
S8	SWITCH, LIMIT HI TEMP COMPRESS 2
S11	SWITCH, LOW PRESS, LOW AMBIENT COMP 1
S28	SWITCH, LIMIT HI PRESS COMPRESS 3
S31	SWITCH, LIMIT HI TEMP COMPRESS 3
S40	THERMOSTAT, CRANKCASE 1
S42	SWITCH, OVERLOAD RELAY BLOWER MOTOR
S49	SWITCH, FREEZE STAT COMPRESS 1
S50	SWITCH, FREEZE STAT COMPRESS 2
S53	SWITCH, FREEZE STAT COMPRESS 3
S84	SWITCH, LOW PRESS, LOW AMBIENT COMP 2
S85	SWITCH, LOW PRESS, LOW AMBIENT COMP 3
S87	SWITCH, LOW PRESS, COMP 1
S88	SWITCH, LOW PRESS, COMP 2
S94	SWITCH, LOW PRESS, LOW AMBIENT KIT COMP 4
S95	SWITCH, FREEZE STAT COMPRESS 4
S96	SWITCH, LIMIT HI PRESS COMPRESS 4
S97	SWITCH, LOW PRESS, COMP 4
S98	SWITCH, LOW PRESS, COMP 3
S117	SWITCH, GFI
S162	THERMOSTAT, CRANKCASE 2
S180	SWITCH, LIMIT HI PRESS COMPRESS 4
T1	TRANSFORMER, CONTROL
T18	TRANSFORMER, CONTACTOR
T29	TRANSFORMER, GFI
TB13	TERMINAL STRIP, POWER DISTRIBUTION
TB24	TERMINAL STRIP, UNIT ADDER

10/17

STRATEGOS D BOX
WIRING DIAGRAM
537485-02

10/17

COOLING

SC, SG - 240, 288 - G, J, M, Y

SECTION B | REV 1

Supersedes | New Form No. 537485-02

© 2011 Lennox Commercial