HEAT PUMPS

SL22KLV

DAVE LENNOX *SIGNATURE*® COLLECTION

Cold Climate | Variable Capacity | Precise Comfort® Technology | Quantum™ Coil| R-454B | 60Hz

RESIDENTIAL
PRODUCT SPECIFICATIONS (EHB)

2 to 5 Tons
SEER2 up to 21.1
HSPF2 up to 10.5
Cooling Capacity | 22,200 to 56,000 Btuh
Heating Capacity | 21,600 to 60,000 Btuh
Cold Climate Operation –20°F

S40 Smart Wi-Fi
Communicating Thermostat
(Required - Not Furnished)

MODEL NUMBER IDENTIFICATION

SL 22 K L V - 036 - 230 A 01

- **Product Tier** — SL = Signature® Series
- **Nominal SEER2** — 22 = 22.0 to 23.0
- **Refrigerant Type** — K = R-454B
- **Unit Type** — L = Cold Climate (Low Ambient)
- **Cooling/Heating Stages** — V = Variable Capacity Compressor
- **Nominal Cooling Capacity** — 024 = 2 tons; 036 = 3 tons; 048 = 4 tons; 060 = 5 tons
- **Voltage** — 230 = 208/230V-1ph-60Hz
- **Ratings Revision Level**
- **Minor Revision Number**

Form Number 211065 | October 2026
Supersedes all previous versions

FEATURE HIGHLIGHTS

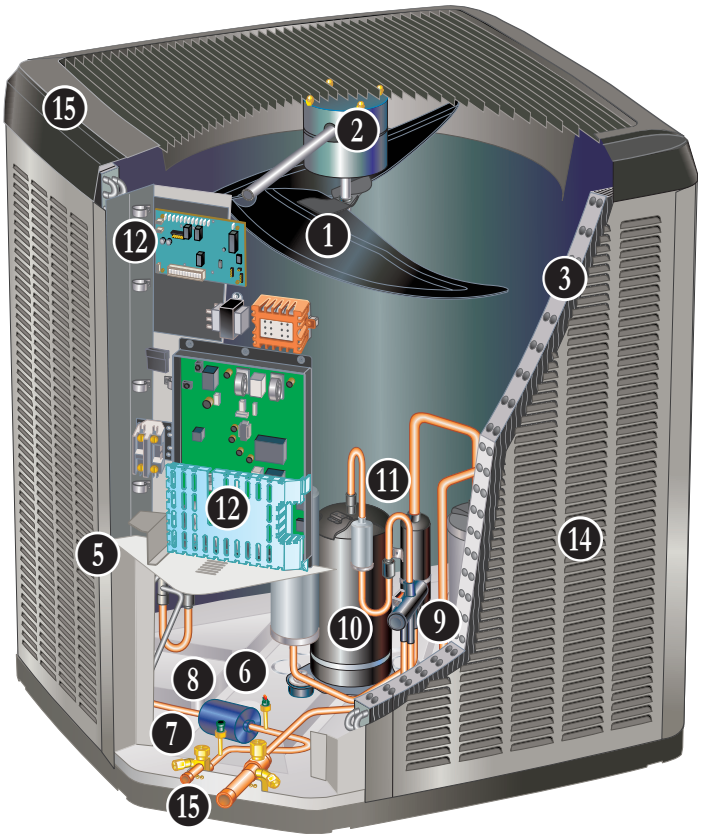

1. Outdoor Coil Fan with Silent Comfort™ Technology Fan Guard
2. Variable-Speed Outdoor Coil Fan Motor with Integrated Control
3. Quantum™ Outdoor Coil
4. Electronic Check/Expansion Valve (EEV)
5. High Pressure Transducer
6. Low Pressure Transducer
7. High Capacity Liquid Line Drier
8. Four-Way Reversing Valve
9. Variable Capacity Scroll Compressor
10. Accumulator
11. DC Inverter Control
12. Lennox® Communicating Control
13. Composite Unit Top and Base
14. Louvered Coil Protection
15. Refrigerant Line Connections and Access

NOTE - SL22KLV MODELS CAN ONLY BE MATCHED WITH LENNOX® COMMUNICATING-ENABLED VARIABLE-SPEED INDOOR FURNACES AND AIR HANDLERS.

NOTE - SL22KLV MODELS CAN ONLY BE USED WITH A LENNOX® COMMUNICATING THERMOSTAT.

CONTENTS

Approvals And Warranty 3
Controls Required 7
Dimensions 9
Features 3
Field Wiring 10
Installation Clearances 10
Model Number Identification. 1
Optional Accessories - Order Separately 8
Sound Data 10
Specifications 8
TXV Substitution - R-454b 11
TXV Usage. 11

APPROVALS AND WARRANTY

APPROVALS

- AHRI Certified to AHRI Standard 210-240-2023
- AHRI Standard 1380 Demand Response compatible
- For AHRI Certified system match-ups and expanded ratings, visit www.LennoxPROs.com
- ENERGY STAR® Cold Climate certified
- Sound rated to AHRI Standard 270 or 370 test conditions
- Tested in the Lennox Research Laboratory environmental test room
- Rated according to U.S. Department of Energy (DOE) test procedures
- Units and components UL, NEC, and CEC bonded for grounding to meet safety standards for servicing
- ETL certified (U.S. and Canada)
- ISO 9001 Registered Manufacturing Quality System

WARRANTY

- Compressor:
  - Limited ten years in residential installations
  - Limited five years in non-residential installations
- All other covered components:
  - Limited ten years in residential installations
  - Limited one year in non-residential installations

NOTE - Refer to Lennox® Basic Limited Warranty at www.Lennox.com for additional details.

FEATURES

APPLICATIONS

- 2 through 5 tons
- Sound levels as low as 58 dBA
- Cold climate heating operation down to –20°F
- Single phase power supply
- Vertical air discharge
- Applicable to indoor air handlers or gas furnaces with indoor add-on coils
- Suitable for coastal areas
- Factory test operated
- Shipped completely factory assembled, piped, and wired

NOTE - When heat pumps are used with gas furnaces, a dual-fuel compatible thermostat or zone control system with dual-fuel capabilities must be used (order separately).

NOTE - Installer must set outdoor unit, connect refrigerant lines and make electrical connections to complete job.

NOTE - The SL22KLV heat pump can only be matched with Lennox® Communicating variable-speed indoor furnaces and air handlers.

REFRIGERATION SYSTEM

R-454B Refrigerant

- Low GWP (Global Warming Potential)
- Zero ODP (Ozone Depletion Potential)
- Low Toxicity/Lower Flammability - A2L
- Unit is factory pre-charged

NOTE - Total system refrigerant charge is dependent on outdoor unit size, indoor unit size and refrigerant line length.

NOTE - Refer to the unit-mounted charging sticker to determine correct amount of charge required.

1 Outdoor Coil Fan with Silent Comfort™ Technology

- Specially-designed, SilentComfort™ fan guard uses Passive Vortex Suppression to reduce air noise
- Fan guard constructed of corrosion-resistant PVC (polyvinyl chloride) coated steel
- Specially designed fan blades reduce operating sound levels
- Direct drive fan moves large air volumes uniformly through entire condenser coil for high refrigerant cooling capacity
- Vertical air discharge
- Fan service access by removal of fan guard

2 Variable-Speed Outdoor Coil Fan Motor With Integrated Control

- Programmed for variable capacity operation
- Fan speed is directly controlled by communication between the Lennox® communicating outdoor unit control and the Lennox® communicating thermostat
- Totally enclosed fan motor
- Inherently protected

REFRIGERATION SYSTEM (continued)

3 Quantum™ Coil
- Enhanced aluminum alloy tube/enhanced fin coil
- Superior corrosion resistance
- Lennox designed and fabricated coil
- Ripple-edged aluminum fins
- Aluminum tube construction
- Lanced fins for maximum fin surface exposure
- Fin collars grip tubing for maximum contact area
- Flared shoulder tubing connections
- Factory tested under high pressure
- Entire coil is accessible for cleaning

4 Electronic Check/Expansion Valve (EEV) - Outdoor Unit
- Designed and sized for heat pump systems
- Precise refrigerant flow is controlled by signals from the Lennox® Communicating Control
- Measures pressure and temperature for precise superheat control

Discharge Temperature Switch
- Shuts off unit if operating conditions cause the compressor discharge line temperature to rise above setpoint
- Protects compressor from excessive pressure / temperature
- Automatic reset when temperature drops below setpoint

5 High Pressure Transducer
- Measures pressure in the liquid line
- Pressure readings are used to calculate subcooling values to assist with charging

6 Low Pressure Transducer
- Shuts off unit if suction pressure falls below setting
- Provides loss of charge and freeze-up protection

High Pressure Switch
- Protects the system from high pressure conditions that can be a result of fan failure or a blocked/dirty coil
- Automatic reset

Low Pressure Switch
- Protects the compressor from low pressure conditions such as low refrigerant charge, or low/no indoor airflow
- Shuts off unit if suction pressure falls below setting
- Loss of charge and freeze-up protection
- Automatic reset

7 High Capacity Liquid Line Drier
- Factory installed in the liquid line
- Drier traps moisture or dirt that could contaminate the system
- 100% molecular-sieve, bead type, drier

8 Four-Way Reversing Valve
- Rapid changeover of refrigerant flow direction from cooling to heating and vice versa
- Operates on pressure differential between outdoor unit and indoor coil

Optional Accessories

Check/Expansion Valve Kits
- Field installed on indoor units (if required)
- See TXV Usage table
- Chatleff style fitting

Freezestat
- Protects the system from ice buildup on the indoor coil due to conditions such as low/no airflow, or low refrigerant charge
- Cycles compressor off when suction line temperature falls below freezestat setpoint
- Opens at 29°F and closes at 58°F
- Installs on or near the discharge line of the evaporator or on the suction line

Refrigerant Line Kits
- Refrigerant lines are shipped refrigeration clean
- Lines are cleaned, dried, pressurized, and sealed at factory
- Suction line fully insulated
- Lines are stubbed at both ends

NOTE - The SL22KLV is a variable capacity heat pump utilizing variable speed compressor technology. With the variable speed compressor and variable pumping capacity, additional consideration must be given to refrigerant piping sizing and application.

Refer to the Installation Instructions or Service Literature for Line Set Requirements and Refrigerant Piping Guidelines.

INDOOR REFRIGERANT DETECTION SYSTEM (RDS)

- Complies with UL 60335-2-40 approved standard
- Required for all systems using R-454B refrigerant
- Factory or field installed on all indoor units
- Consists of a RDS refrigerant detection sensor and a mitigation control in the indoor unit
- Ensures safe operation for systems equipped with R-454B refrigerant
- Indoor sensor will detect any R-454B refrigerant
- If R-454B refrigerant is detected, the refrigerant detection system will stop compressor operation and operate the blower to reduce concentrations in the conditioned space
- Once safe levels are reached the HVAC system will resume normal operation
- Refer to indoor unit Product Specifications documents for additional details

FEATURES

PRECISE COMFORT® TECHNOLOGY

The Variable Capacity Compressor and DC Inverter Control is an integrated system that operates together to reduce overall energy usage when compared to conventional heat pumps.

9 Variable Speed Scroll Compressor

- Operates on a variable frequency determined by the DC Inverter Control to vary capacity based on the cooling load required
- High volumetric efficiency
- Uniform suction flow
- Constant discharge flow
- High efficiency
- Quiet operation

10 Accumulator

- Standard in all models

Compressor Crankcase Heater

- Prevents migration of liquid refrigerant into compressor and ensures proper compressor lubrication

Compressor Sound Dampening System

- Comprised of a vinyl and polyester composite
- Inner and outer layer sound cover furnished on 4 and 5 ton units only
- Inner layer sound cover (2 and 3 ton units only)
- All open edges sealed with one-inch wide hook and loop fastening tape
- Rubber dampeners standard on all sizes to reduce sound levels

11 DC Inverter Control

- Converts AC line voltage into filtered variable DC voltage
- Provides continuous compressor operation, while adjusting the capacity according to indoor temperature
- Adjusts compressor output in increments as small as 1%
- The accurate sensing of cooling or heating load prevents frequent changes in capacity and ensures efficient, economical operation
- Power Factor Correction (PFC) circuit monitors the DC bus for high, low and abnormal voltage conditions to protect the compressor
- Integrated noise filter reduces unwanted electromagnetic interference (EMI)
- The inverter reactor (mounted separately) adds inductance to the line between the inverter and the compressor to limit current rise and protect the compressor

CONTROLS

12 Lennox® Communicating Control

- Advanced control communicates information about various operating parameters in the heat pump to the Lennox® Communicating Thermostats to constantly maintain the highest level of comfort, performance and efficiency available
- Auto Configuration - On start-up the control automatically sends a description of the unit to the Lennox® Communicating Thermostat to automatically configure the features available
- Control Features:
  - Seven-Segment Display - Shows information about outdoor unit type and capacity and also displays alerts for common fault conditions (electrical and mechanical)
  - Low Voltage Protection - Prevents compressor operation when voltage is not within the specified range
  - High and low pressure transducer monitoring with provisions for lockout
  - Five-Strike lockout protection protects compressor
  - Liquid line temperature and sensor monitoring
  - EEPROM storage of all local configurations
  - Non-volatile memory storage of 100 alarm codes with display of last 10 codes for troubleshooting
  - Built-in low-ambient control

NOTE - A 6-pin RAST connector is also provided for outdoor unit wiring connections to the control.

Low Ambient Cooling Operation

- Unit can operate down to 0°F outdoor air temperature in the cooling mode

NOTE - A freezestat is recommended for extra protection during low ambient cooling operation.

Cold Climate Heating Operation

- Unit can operate down to –20°F in the heating mode

Defrost Mode

- Enables a demand defrost cycle whenever system heating performance falls below optimum levels
- Sensing element on coil determines when defrost cycle is required and when to terminate cycle

Climate IQ™ Technology

- Optimizes dehumidification settings for specific climates to improve home comfort during cooling or heating operation
- Monitors regional weather conditions and automatically removes excess humidity when necessary

FEATURES

CONTROLS (continued)

Lennox® Communicating Thermostat Settings:

Cooling Mode

- Three climate settings are available:
  - Dry - The system supplies higher indoor airflow at all compressor capacities, increasing efficiency by operating at a higher sensible to total ratio
  - Moderate - The system supplies indoor airflow that balances efficiency and comfort
  - Humid - The system supplies lower indoor airflow at all compressor capacities, improving humidity removal by operating at a lower sensible to total ratio

Heating Mode

- Two climate settings are available:
  - Normal - Heats the home with the highest efficiency
  - Comfort - System reduces indoor airflow, increasing supply air temperature

- Climate IQ (Auto) - Dry, Normal, Basic and Humid modes are automatically set based on the difference between the measured relative humidity and the relative humidity setting
- All modes are selected on the Lennox® Communicating Thermostat

Advanced Cold Climate Performance

- Optimizes system heating performance by providing higher discharge air temperatures, resulting in higher levels of comfort
- More closely resembles the warm discharge air of a furnace and is significantly warmer than typical heat pump systems
- Enabled on the Lennox® Communicating Thermostat (Select "Comfort" in User Settings under "Select Heat Pump Mode")

Outdoor Air Temperature Sensor

- Used with Lennox® Communicating Thermostats
- Sensor allows thermostat to display outdoor temperature
- Sensor is auto-detected when connected to thermostat

REQUIRED COMPONENTS

Thermostat

NOTE - The SL22KLV heat pump can only be used with a Lennox® Communicating Thermostat

- Thermostat is not furnished with unit
- See Page 7

CABINET

13
- Composite unit base and top resists corrosion
- Pre-painted powder paint cabinet finish
- Tested to the International Cyclic Salt Fog/UV Exposure Standard, ASTM D5894, for excellent corrosion protection
- Louvered steel panels surround unit on all four sides
- Control box is conveniently located with all controls factory wired
- Drainage holes are provided in base section for moisture removal
- Composite base raises the unit off of the mounting surface, away from damaging moisture

14 Louvered Coil Protection

- Steel louvered panels provides complete coil protection
- Lift-off panels are easily removed to allow easy cleaning and servicing of coils
- Interlocking tabs and slots assure tight fit on cabinet

15 Refrigerant Line Connections, Electrical Inlets and Service Valves

- Braze connection suction and liquid lines
- Located on corner of unit cabinet
- Suction valve can be fully shut off, while liquid valve may be front seated to manage refrigerant charge while servicing system
- Refrigerant line connections and field wiring inlets are located in one central area of the cabinet
- See dimension drawing

Braze-Free/Press Fitting Flexibility

- Units can accommodate braze-free or press fittings for installation versatility

Optional Accessories

Snow Guard

- For use in locations where the possibility of heavy snow or freezing rain accumulation may occur
- Deflects snow and ice away from the outdoor fan and prevents build-up on the fan guard

Stand-Off Guard-Edge Raiser Kit

- High density polyethylene feet raise unit off of mounting surface
- Available in 3 in. (76 mm) and 6 in. (152 mm) heights
- Four feet are furnished per order number

CONTROLS REQUIRED

S40 Smart Wi-Fi Thermostat

NOTE - The SL25KCV Air Conditioner can only be used with a Lennox® Communicating Thermostat.

- Recognizes and connects to all Lennox ® Communicating products to automatically configure and control the heating/cooling system
- Advanced communicating controls in specific heating and cooling units, PureAir™ S Air Purification System and Healthy Climate® HRV/ERV (Heat/Energy) Recovery Ventilators transmit information about various operating parameters to the thermostat to constantly maintain the most comfortable and efficient operating conditions possible
- Lennox Smart Room Sensors, Lennox Wireless Extenders and Lennox Smart Air Quality Monitor can be added to the system
- Smart home automation compatible with Amazon Alexa®, Google Assistant, Control4®, Building36®, Matter and IFTTT
- Lennox® Home App controls temperature, fan operation, set programs/schedules and set Away mode on a smartphone
- Lennox Smart Tech App allows the installer to commission the system and remotely turn the system on and off during setup or service call on a smartphone

NOTE - Please refer to the individual Product Specifications for these products for full information.

CONTROLS - ORDERING

S40 Smart Wi-Fi Thermostat	**22V24**
Lennox® Smart Room Sensor	**22V25**
Lennox® Smart Air Quality Monitor	**21P02**
Lennox® Wireless Extender	**22V26**
[1] Discharge Air Temperature Sensor	**88K38**
[2] Remote Outdoor Air Temperature Sensor (for dual-fuel and Humiditrol®)	**X2658**

[1] Optional for service diagnostics.
[2] Sensor is REQUIRED with Enhanced Dehumidification Accessory (EDA) applications.

SPECIFICATIONS

Size		024	036	048	060
Nominal Tonnage		2	3	4	5
Sound Rating Number Range	dBA	58-71	61-72	61-74	59-76
Connections (Sweat)	Liquid line (OD) - in.	3/8	3/8	3/8	3/8
	Suction line (OD) - in.	7/8	7/8	7/8	1-1/8
Compressor Type		Variable Scroll	Variable Scroll	Variable Scroll	Variable Scroll
Refrigerant (15 ft. Line Set)	[1] R-454B charge furnished	10 lbs. 13 oz.	16 lbs. 13 oz.	16 lbs. 13 oz.	16 lbs. 6 oz.
Refrigerant (30 ft. Line Set)	[1] R-454B charge furnished	11 lbs. 6 oz.	17 lbs. 6 oz.	17 lbs. 6 oz.	16 lbs. 11 oz.
Indoor Unit Expansion Valve (TXV)		**26Z70**	**26Z70**	**26Z71**	**26Z72**
Outdoor Coil	Net face area - ft.[2] Outer coil	30.9	30.9	30.9	30.9
	Inner coil	- - -	29.94	29.94	29.94
	Tube diameter - in.	5/16	5/16	5/16	5/16
	Rows	1	2	2	2
	Fins - in.	22	22	22	22
Outdoor Fan	HP	1/3	1/3	1/3	1/3
	Diameter - in.	28	28	28	28
	Blades	2	2	2	2
	Cfm - Max. Speed	4121	4595	4595	4799
	Min. Speed	1540	2305	3158	2305
	Rpm - Max. Speed	689	775	775	818
	Min. Speed	255	382	513	382
	Watts - Max. Speed	116	159	159	193
	Min. Speed	9	24	52	24
Shipping Data - lbs.		266	316	318	318

ELECTRICAL DATA

Line voltage data (Volts-Phase-Hz)	208/230-1-60	208/230-1-60	208/230-1-60	208/230-1-60
[2] Maximum overcurrent protection (MOCP) amps	25	40	50	60
[3] Minimum circuit ampacity (MCA)	15.5	23.5	31.8	34.8
Compressor Inverter Input Current Amps	10.3	16.63	23.4	25.7
Fan Motor Full load amps	2.6	2.6	2.6	2.6

OPTIONAL ACCESSORIES - ORDER SEPARATELY

[4] Freezestat	3/8 in.	**93G35**	•	•	•	•
[5] Refrigerant Line Sets Liquid x Suction OD | Insulation Thickness | Length	3/8 x 7/8 | 3/8 | 30 ft.	**89J60**	•	•	•	
	3/8 x 7/8 | 3/8 | 50 ft.	**89J62**				
	3/8 x 1-1/8 | 3/8 | 50 ft.	**73P91**				•
[6] Snow Guard		**27G70**	•	•	•	•
Stand-Off Guard-Edge Raiser Kit	3 in. (76 mm)	**27X34**	•	•	•	•
	6 in. (152 mm)	**27X35**	•	•	•	•

NOTE - Extremes of operating range are plus 10% and minus 5% of line voltage.

1 Refrigerant charge sufficient for the line set length listed in parenthesis. For longer line set requirements see the Installation Instructions or unit Charging Label for information about line set length and additional refrigerant charge required.

2 HACR type breaker or fuse.

3 Refer to National or Canadian Electrical Code manual to determine wire, fuse and disconnect size requirements.

4 Freezestat is recommended for Low Ambient operation.

5 Refer to the Installation Instructions or Service Literature for Line Set Requirements and Refrigerant Piping Guidelines.

6 Adds 8-1/2 in. (216 mm) to unit height.

DIMENSIONS

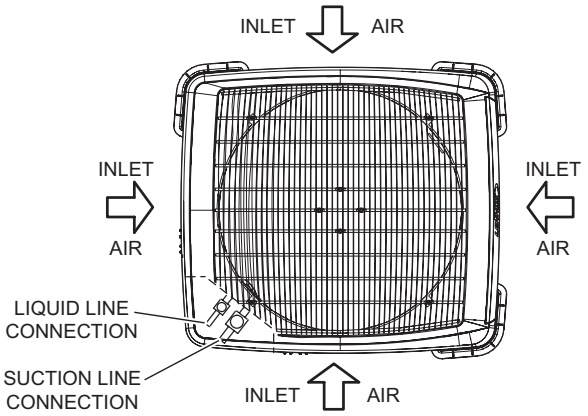

TOP VIEW

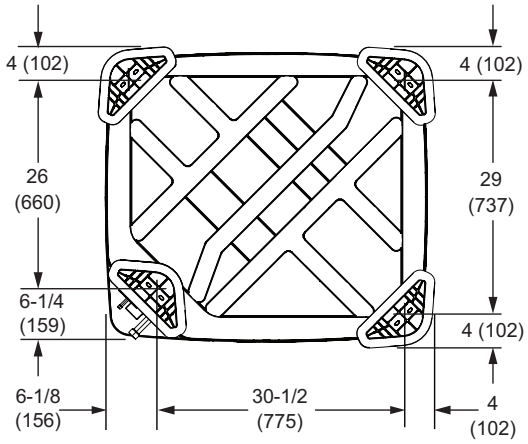

BOTTOM VIEW BASE SECTION
(With Optional Standoff Kit)

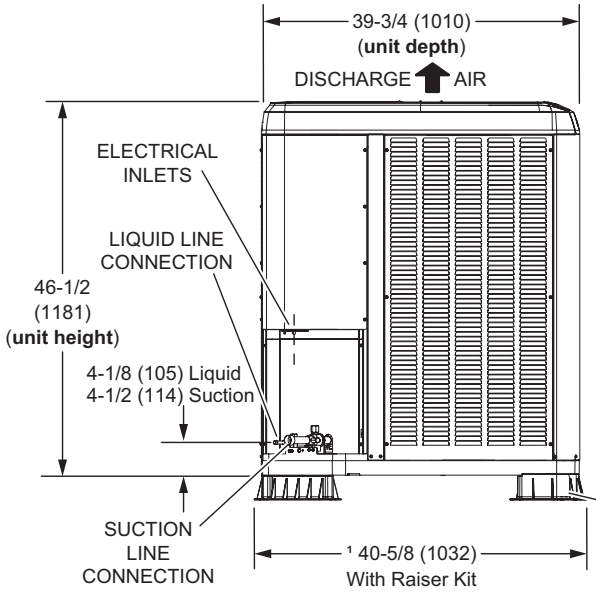

SIDE VIEW

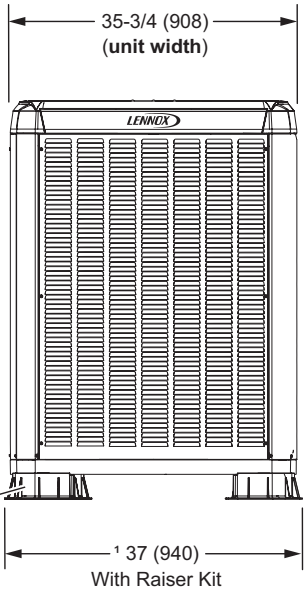

FRONT VIEW

¹ OPTIONAL STAND-OFF GUARD-EDGE RAISER KIT (4) (Field Installed)

¹ Adds 3 in. (76 mm) or
6 in. (152 mm) to unit height
Adds 1-1/4 in. (32 mm) to unit width and depth

SOUND DATA

Size	Octave Band Sound Power Levels dBA, re 10^{-12} Watts Center Frequency - HZ							[1] Sound Rating Number (dBA)	[2] Estimated Sound Pressure Level at Distance From Unit (dBA at distance in ft.)				
	125	250	500	1000	2000	4000	8000		3	5	10	15	50
024 Min.	53.2	49.8	45.0	42.2	34.0	33.2	41.6	58	51	46	40	37	26
024 Max.	56.2	59.4	61.6	58.4	52.4	48.8	44.4	71	64	59	53	50	39
036 Min.	55.1	53.2	51.8	47.5	42.4	38.2	32.3	61	54	49	43	40	29
036 Max.	56.5	60.3	63.8	58.2	53.7	48.6	41.2	72	65	60	54	51	40
048 Min.	54.2	54.2	51.3	47.4	43.7	38.4	32.5	61	54	49	43	40	29
048 Max.	58.0	63.2	64.4	60.6	56.6	51.8	44.1	74	67	62	56	53	42
060 Min.	54.1	51.0	47.9	44.4	40.9	37.1	32.6	59	52	47	41	38	27
060 Max.	59.8	63.4	67.6	63.6	58.6	53.3	46.7	76	69	64	58	55	44

NOTE - The octave sound power data does not include tonal correction.

[1] Tested according to AHRI Standard 270 test conditions. Sound rating Number is the overall A-Weighted Sound Power Level, (LWA), dB (100 Hz to 10,000 Hz).

[2] Estimated sound pressure level at distance based on AHRI Standard 275 method for equipment located on the ground, roof, or on side of building wall with no adjacent reflective surface within 9.8 feet. Sound pressure levels will increase based on changes to assumptions. For other applications, refer to AHRI Standard 275.

INSTALLATION CLEARANCES

NOTES:

- Service Clearance – 30 in. (762 mm) on one of the sides adjacent to the Control Box.
- One of other three sides must be 36 in. (914 mm).
- One of the two remaining sides may be 12 in. (305 mm).
- The remaining side may be 6 in. (152 mm).
- 48 in. (1219 mm) clearance required on top of unit
- 24 in. (610 mm) required between two units

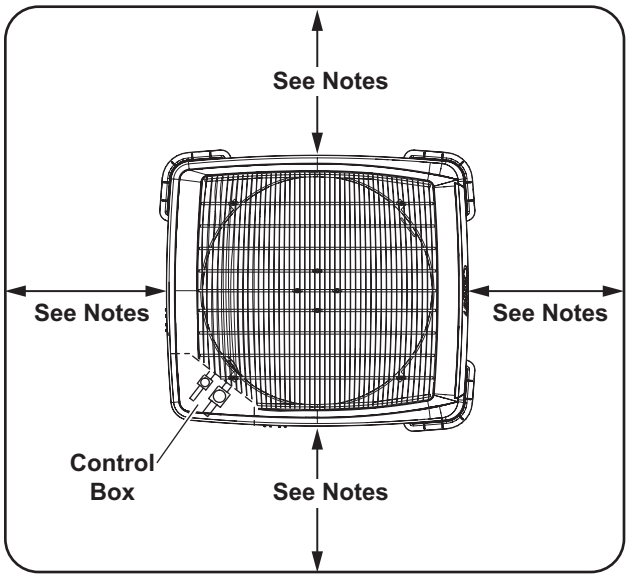

FIELD WIRING

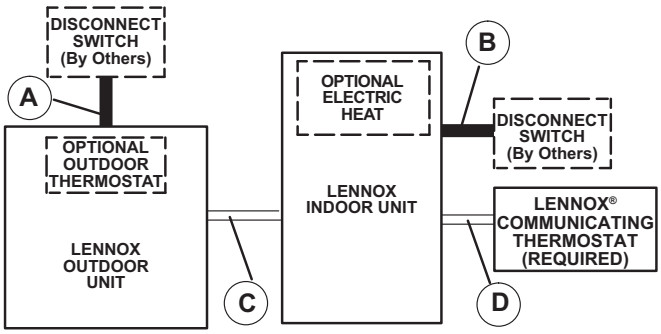

A- Two Wire Power

B- Two or Three Wire Power (size to heater capacity)

C - Lennox® Communicating Thermostat:
- Four Wire, 18AWG (RSBus)

D - Lennox® Communicating Thermostat:
- Four Wire, 18 to 22AWG (RSGBus) standard thermostat cable for terminals (R, C, I+, I-).

NOTE - All wiring must conform to NEC or CEC and local electrical codes.

NOTE - Refer to the S40 Installation Instructions for optional wiring connections for communicating thermostats.

NOTE - Field wiring is not furnished.

TXV USAGE

All Lennox coils and air handlers are shipped with a factory installed TXV. In most cases, no substitution is needed.
If a different size TXV is required, it will be listed in the "TXV SUBSTITUTION" table by size. The correct TXV must be ordered separately and field installed.

Size	Order Number
024	**26Z70**
036	**26Z70**
048	**26Z71**
060	**26Z72**

AHRI STANDARD 210-240-2023

Cooling or heating capacities are net values, including the effects of blower motor heat, and do not include supplementary heat. Power input is the total power input to the compressor(s) and fan(s), plus any controls and other items required as part of the system for normal operation.

Units which do not have an indoor air-circulating blower furnished as part of the model, i.e., split system with indoor coil only, is established by subtracting from the total cooling capacity 1250 Btu/h per 1,000 cfm, and by adding the same amount to the heating capacity.

Total power input for both heating and cooling is increased by 365 W per 1,000 cfm of indoor air circulated.

TXV SUBSTITUTION - R-454B

A general guide for replacing the factory installed R-454B TXV if the indoor unit (coil/air handler) is larger or smaller than the outdoor unit.

Outdoor Unit		Indoor Unit		Indoor TXV Furnished	Indoor TXV Replacement
Size	Tons	Size	Tons		
024	2	42	3.5	**26Z71**	**26Z70**
024	2	48	4	**26Z71**	**26Z70**
024	2	49	4	**26Z71**	**26Z70**
024	2	50/60	4/5	**26Z71**	**26Z70**
024	2	51/61	4/5	**26Z71**	**26Z70**
024	2	60	5	**26Z72**	**26Z70**
036	3	42	3.5	**26Z71**	**26Z70**
036	3	48	4	**26Z71**	**26Z70**
036	3	49	4	**26Z71**	**26Z70**
036	3	50/60	4/5	**26Z71**	**26Z70**
036	3	51/61	4/5	**26Z71**	**26Z70**
036	3	60	5	**26Z72**	**26Z70**
048	4	30/36	2.5/3	**26Z70**	**26Z71**
048	4	36	3	**26Z70**	**26Z71**
048	4	60	5	**26Z72**	**26Z71**
060	5	50/60	4/5	**26Z71**	**26Z72**
060	5	51/61	4/5	**26Z71**	**26Z72**

TXV Ranges:

26Z70 - 1.5 to 3 ton systems - Use on 3 ton (036) and lower systems.

26Z71 - 3.5-4 ton systems - Use on 4 ton (048) and down to 3.5 ton (042) systems.

26Z72 - 5 ton systems - Use on 5 ton (060) systems only.

REVISIONS

Sections	Description of Change
Approvals	Products are now AHRI Standard 1380 Demand Response compatible.

Visit us at www.Lennox.com
For the latest technical information, www.LennoxPros.com
Contact us at 1-800-9-LENNOX

NOTE - Due to Lennox' ongoing commitment to quality, Specifications, Ratings and Dimensions subject to change without notice and without incurring liability.
Improper installation, adjustment, alteration, service or maintenance can cause property damage or personal injury.
Installation and service must be performed by a qualified installer and servicing agency.

©2025 Lennox Industries, Inc.