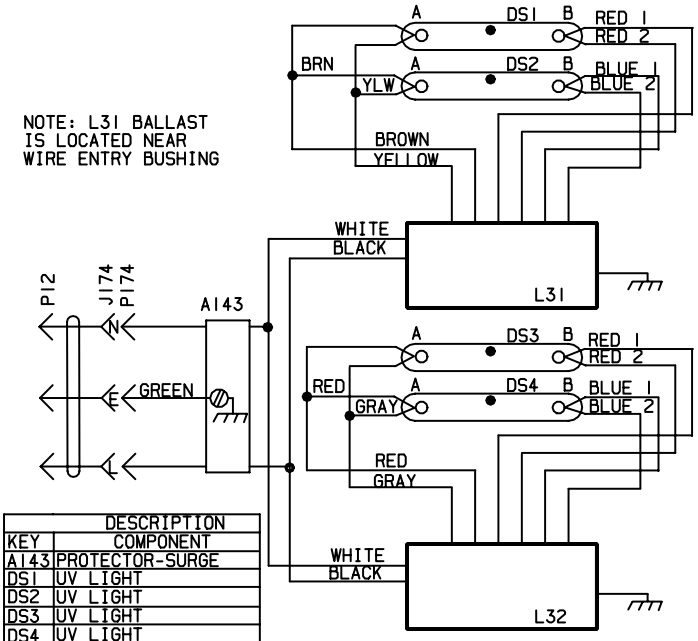

DESCRIPTION	
KEY	COMPONENT
A143	PROTECTOR-SURGE
DS1	UV LIGHT
DS2	UV LIGHT
DS3	UV LIGHT
DS4	UV LIGHT
J174	JACK
L31	BALLAST
L32	BALLAST
P12	PLUG
P174	PLUG

WIRING DIAGRAM	06/04
ACCESSORIES	
PHOTOCATALYTIC AIR PURIFIER PCO-12C	
Supersedes Form No. 534,187W	New Form No. 534,799W

© 2004

Litho U.S.A.