UNIT INFORMATION

Corp. 100012
June 14, 2022

SL28XCV

SL28XCV (HFC-410A) SERIES OUTDOOR UNITS

⚠ WARNING

Improper installation, adjustment, alteration, service or maintenance can cause property damage, personal injury or loss of life. Installation and service must be performed by a licensed professional HVAC installer or equivalent, service agency, or the gas supplier.

⚠ IMPORTANT

The Clean Air Act of 1990 bans the intentional venting of refrigerant (CFCs, HCFCs and HFCs) as of July 1, 1992. Approved methods of recovery, recycling or reclaiming must be followed. Fines and/or incarceration may be levied for noncompliance.

⚠ WARNING

To prevent serious injury or death:

1. Lock-out/tag-out before performing maintenance.
2. If system power is required (e.g., smoke detector maintenance), disable power to blower, remove fan belt where applicable, and ensure all controllers and thermostats are set to the “OFF” position before performing maintenance.
3. Always keep hands, hair, clothing, jewelry, tools, etc. away from moving parts.

⚠ WARNING

Electric Shock Hazard. Can cause injury or death. Unit must be properly grounded in accordance with national and local codes.

Line voltage is present at all components when unit is not in operation on units with single-pole contactors. Disconnect all remote electric power supplies before opening access panel. Unit may have multiple power supplies.

Table of Contents

Model Number Identification....2
Typical Serial Number Identification....2
Specifications....3
Electrical Data....3
Unit Dimensions – Inches (mm)....4
Typical Unit Parts Arrangement....5
Operating Gauge Set and Service Valves....8
Installation....10
Unit Placement....10
Removing and Installing Panels....13
New or Replacement Line Set....14
Brazing Connections....17
Flushing Line Set and Indoor Coil....20
Leak Testing the System....22
Evacuating Line Set and Indoor Coil....24
Thermostat Control and Low Voltage Wiring....25
Servicing Units Delivered Void of Charge....29
Unit Start-Up....29
System Operation and Service....29
Configuring Unit....39
Reconfiguring Outdoor Control using S30 Thermostat....40
System Overview....40
Diagnostic Information....40
Installer Test – Using the S30 Thermostat or Lennox Dealer Setup App....40
Maintenance....40
Unit Wiring Diagrams....42
Unit Sequence of Operation....45
Component Testing....48
System Configuration....60
Unit Operation....60
6-Pin Sensor Harness (COIL, AMB, LIQ/DIS)....61
4-Pin Suction Temperature Sensor / Liquid Temperature Sensor Harness....61
System Refrigerant....69
SL28XCV Advanced Diagnostics....74

⚠ IMPORTANT

This unit must be matched with an indoor coil as specified with AHRI. For AHRI Certified system match-ups and expanded ratings, visit www.LennoxPros.com. Coils previously charged with HCFC-22 must be flushed.

⚠ CAUTION

As with any mechanical equipment, contact with sharp sheet metal edges can result in personal injury. Take care while handling this equipment and wear gloves and protective clothing.

General Information

These instructions are intended as a general guide and do not supersede national or local codes in any way. Consult authorities having jurisdiction before installation.

The SL28XCV is a high-efficiency split system air conditioner **with all-aluminum coil,** designed for use with HFC-410A refrigerant only.

This unit must be installed with an approved indoor air handler or coil. For AHRI Certified system match-ups and expanded ratings, visit www.LennoxPros.com. This outdoor unit is designed for use in systems that use the following refrigerant metering device:

- Thermal expansion valve (TXV)

IMPORTANT: Special procedures are required for cleaning the all-aluminum coil in this unit.

⚠ WARNING

Electrical Hazard
High Voltage
Wait 7 Minutes

Electrical components may hold charge. Do not remove this panel or service this area for 5 minutes after the power has been removed.

Model Number Identification

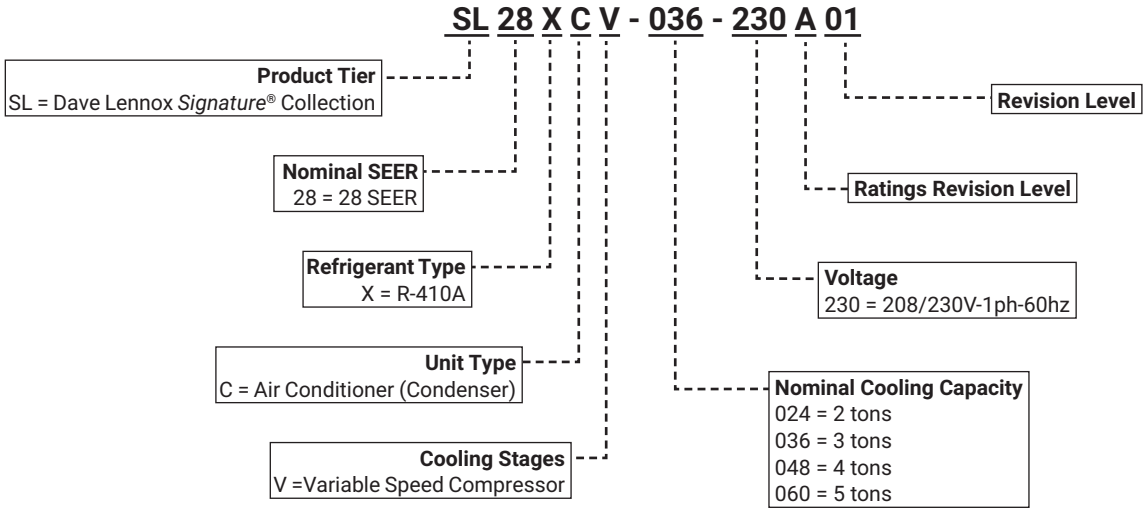

Typical Serial Number Identification

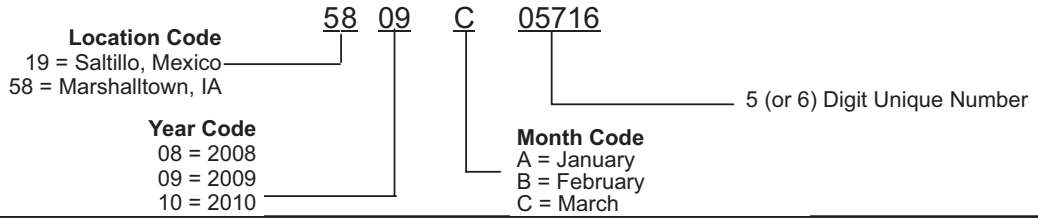

Specifications

General Data		**Model No.**	**SL28XCV-024**	**SL28XCV-036**	**SL28XCV-048**	**SL28XCV-060**
		Nominal Tonnage	2	3	4	5
Connections (sweat)		Liquid line (o.d.) - in.	3/8	3/8	3/8	3/8
		Suction line (o.d.) - in.	7/8	7/8	7/8	1-1/8
Refrigerant		[1] R-410A charge furnished	11 lbs. 0 oz.	10 lbs 8 oz.	12 lbs. 8 oz.	12 lbs. 8 oz.
Outdoor Coil	Net face area - sq. ft.	Outer coil	27.21	27.21	27.21	27.21
		Inner coil	26.36	26.36	26.36	26.36
		Tube diameter - in.	5/16	5/16	5/16	5/16
		No. of rows	2	2	2	2
		Fins per inch	22	22	22	22
Outdoor Fan		Diameter - in.	26	26	26	26
		No. of blades	3	3	3	3
		Motor hp	1/3	1/3	1/3	1/3
		Cfm - Max. Speed	2775	3345	4050	4400
		Min. Speed	1680	2170	2560	2035
		Rpm - Max. Speed	662	801	788	858
		Min. Speed	395	514	495	390
		Watts - Max. Speed	69	112	163	196
		Min. Speed	19	35	50	29
Shipping Data - lbs. - 1 pkg.			284	286	296	296

Electrical Data

Line Voltage Data - 60hz			208/230V-1ph	208/230V-1ph	208/230V-1ph	208/230V-1ph
[2] Maximum Overcurrent Protection (MOCP) amps			15	25	35	50
[3] Minimum Circuit Ampacity (MCA)			11.3	17.8	22.4	29.5
Compressor Input (amps)			6.8	12	15.8	21.5
Outdoor Fan Motor - Full load amps			2.8	2.8	2.6	2.6
REQUIRED COMPONENTS - ORDER SEPARATELY						
S30 Smart Wi-Fi Thermostat		**19V30**	•	•	•	•
[4] Discharge Air Temperature Sensor		**88K38**	•	•	•	•
OPTIONAL ACCESSORIES - ORDER SEPARATELY						
[5] Freezestat	3/8 in. tubing	**93G35**	•	•	•	•
	5/8 in. tubing	**50A93**	•	•	•	•
[6] Refrigerant Line Sets		L15-65-30 L15-65-40 L15-65-50	•	•	•	
		Field Fabricate				•

NOTE - Extremes of operating range are plus 10% and minus 5% of line voltage.

[1] Refrigerant charge sufficient for 15 ft. length of refrigerant lines. For longer line set requirements see the Installation Instructions for information about line set length and additional refrigerant charge required.

[2] HACR type breaker or fuse.

[3] Refer to National or Canadian Electrical Code manual to determine wire, fuse and disconnect size requirements.

[4] Used with the S30 Smart Wi-Fi Thermostat for optional service diagnostics.

[5] Freezestat is recommended for low ambient operation.

[6] Refer to the Installation Instructions for Line Set Requirements and Refrigerant Piping Guidelines.

Unit Dimensions – Inches (mm)

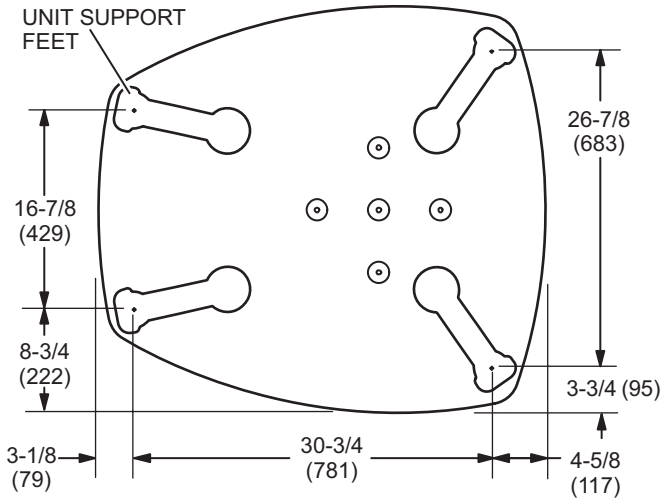

BASE WITH ELONGATED LEGS

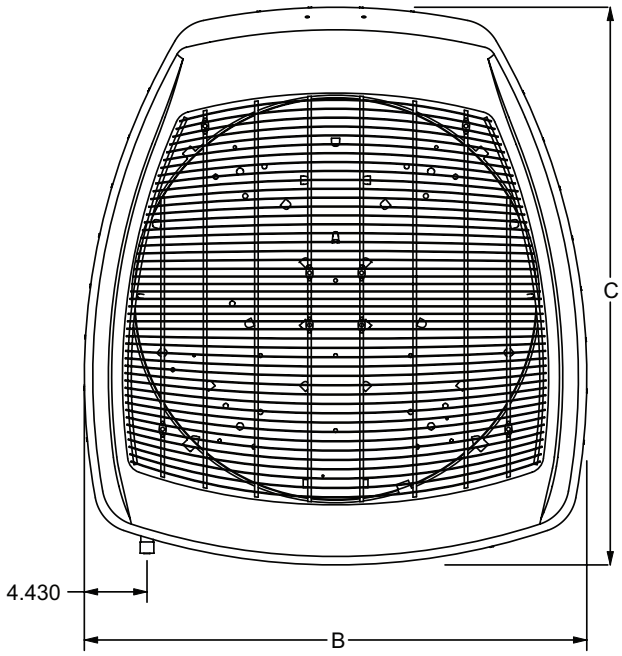

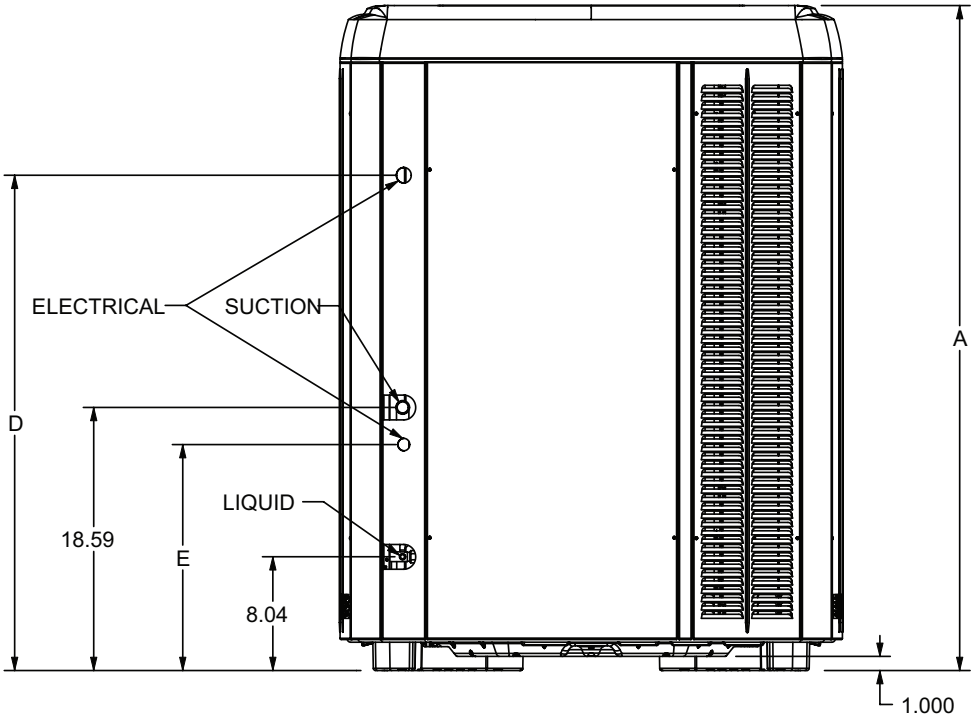

UNIT	DIM A	DIM B	DIM C	DIM D	DIM E
SL28XCV-024	47.00	35.50	39.40	35.00	15.97
SL28XCV-036	47.00	35.50	39.40	35.00	15.97
SL28XCV-048	47.00	35.50	39.40	35.00	15.97
SL28XCV-060	47.00	35.50	39.40	35.00	15.97

Typical Unit Parts Arrangement

CONTROL PANEL
SL28XCV-024, -036

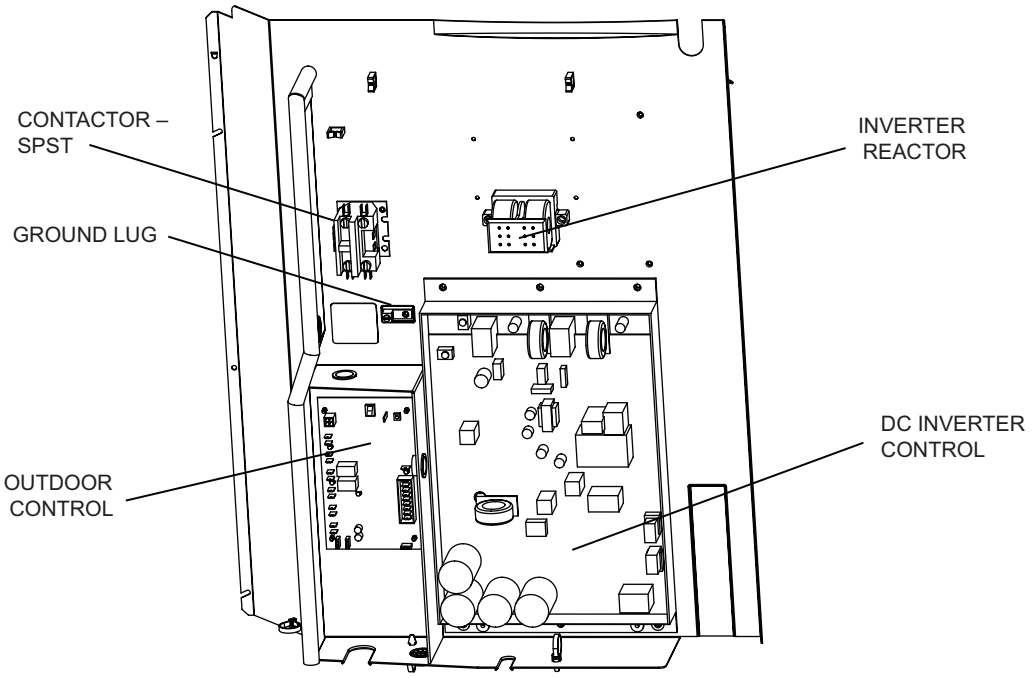

CONTROL PANEL
SL28XCV-048, -060

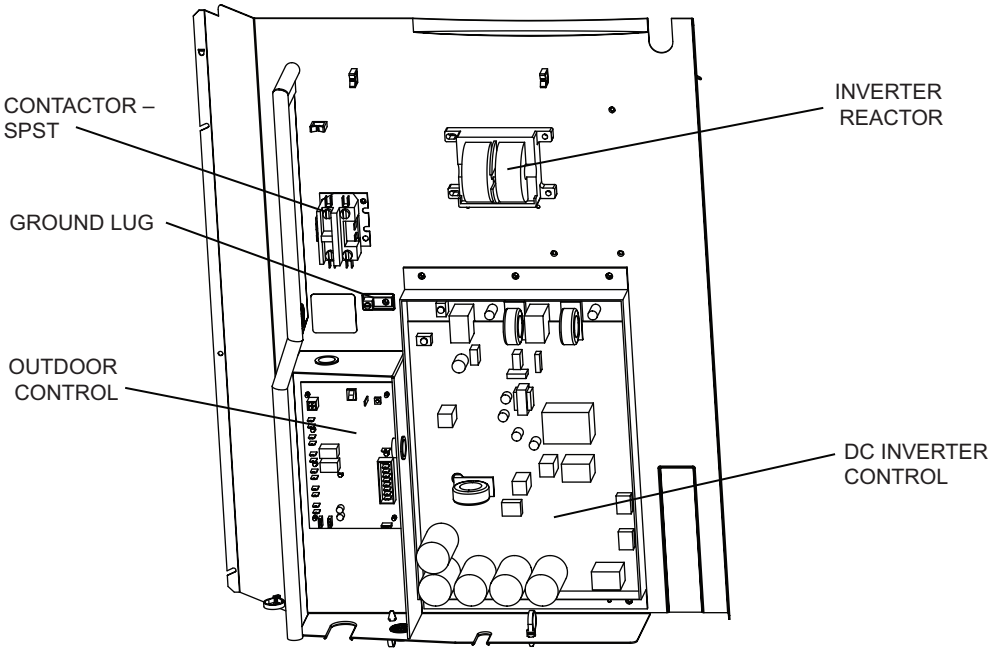

FIGURE 1. Control Panel Components

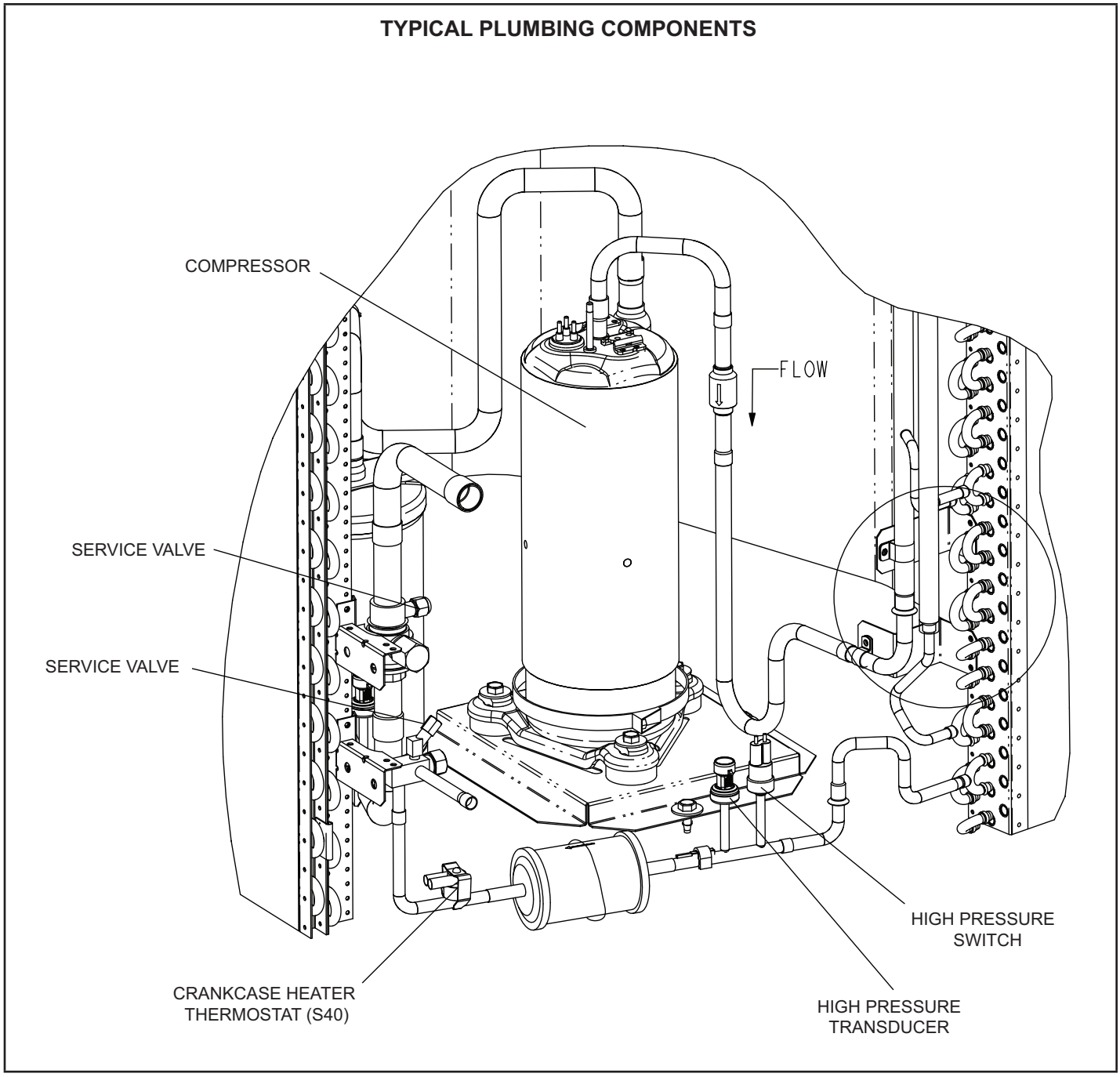

FIGURE 2. Component Locations – SL28XCV-024

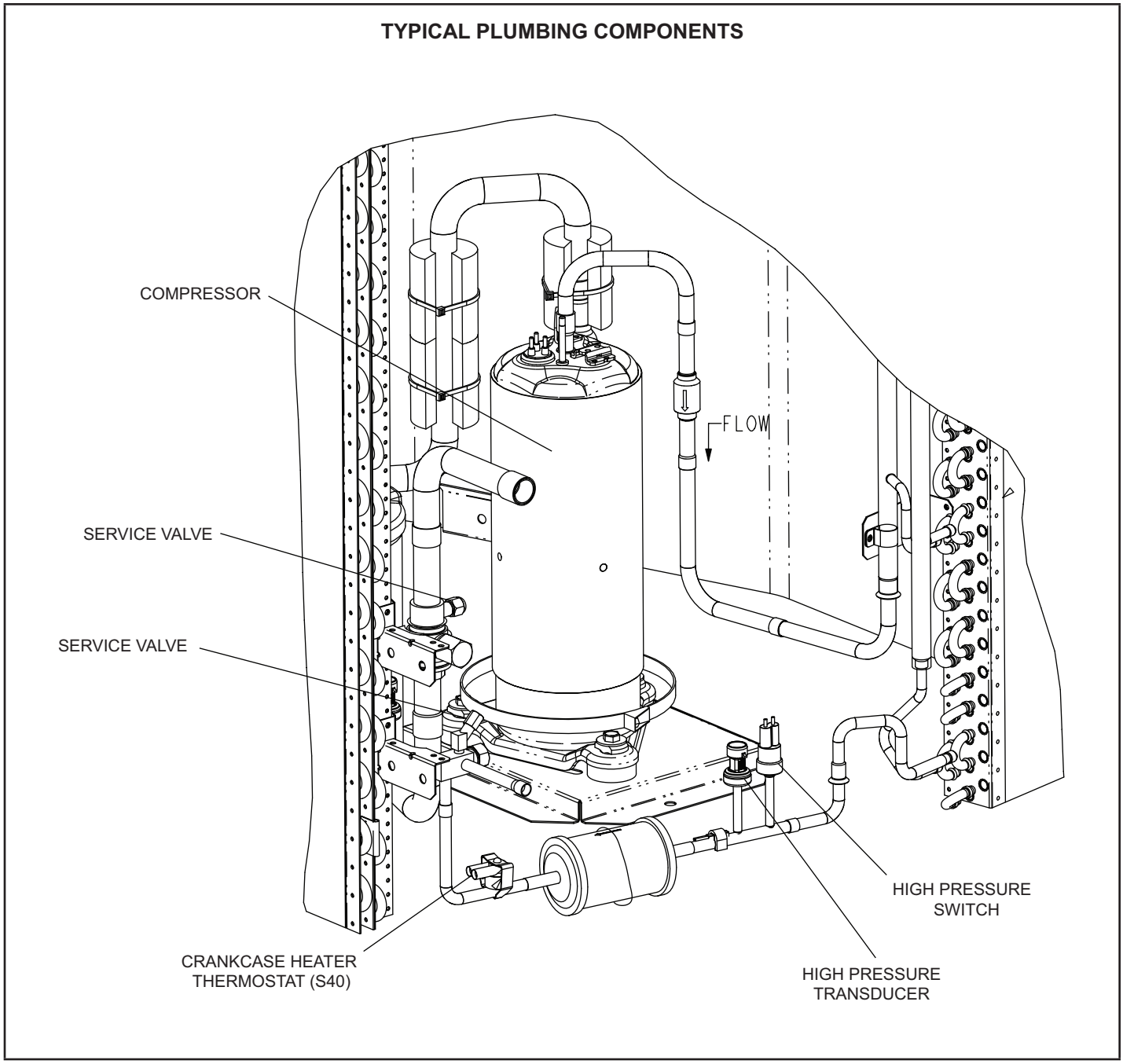

FIGURE 3. Component Locations – SL28XCV-036, -048, -060

Operating Gauge Set and Service Valves

TORQUE REQUIREMENTS

When servicing or repairing heating, ventilating, and air conditioning components, ensure the fasteners are appropriately tightened. Table 1 lists torque values for fasteners.

⚠ IMPORTANT

Only use Allen wrenches of sufficient hardness (50Rc - Rockwell Harness Scale minimum). Fully insert the wrench into the valve stem recess.

Service valve stems are factory-torqued (from 9 ft-lbs for small valves, to 25 ft-lbs for large valves) to prevent refrigerant loss during shipping and handling. Using an Allen wrench rated at less than 50Rc risks rounding or breaking off the wrench, or stripping the valve stem recess.

See the Lennox Service and Application Notes #C-08-1 for further details and information.

⚠ IMPORTANT

To prevent stripping of the various caps used, the appropriately sized wrench should be used and fitted snugly over the cap before tightening.

TABLE 1. Torque Requirements

Parts	Recommended Torque	
Service valve cap	8 ft.- lb.	11 NM
Sheet metal screws	16 ft.- lb.	2 NM
Machine screws #10	28 ft.- lb.	3 NM
Compressor bolts	90 in.- lb.	10 NM
Gauge port seal cap	8 ft.- lb.	11 NM

USING MANIFOLD GAUGE SET

When checking the system charge, only use a manifold gauge set that features low loss anti-blow back fittings.

Manifold gauge set used with HFC-410A refrigerant systems must be capable of handling the higher system operating pressures. The gauges should be rated for use with pressures of 0 - 800 psig on the high side and a low side of 30” vacuum to 250 psig with dampened speed to 500 psi. Gauge hoses must be rated for use at up to 800 psig of pressure with a 4000 psig burst rating.

OPERATING SERVICE VALVES

The liquid and vapor line service valves are used for removing refrigerant, flushing, leak testing, evacuating, checking charge and charging. Each valve is equipped with a service port which has a factory-installed valve stem. Figure 4 provides information on access and operation of both angle and ball service valves

SERVICE VALVES ANGLE AND BALL

Operating Angle Type Service Valve:

1. Remove stem cap with an appropriately sized wrench.
2. Use a service wrench with a hex-head extension (3/16” for liquid line valve sizes and 5/16” for vapor line valve sizes) to back the stem out counterclockwise as far as it will go.

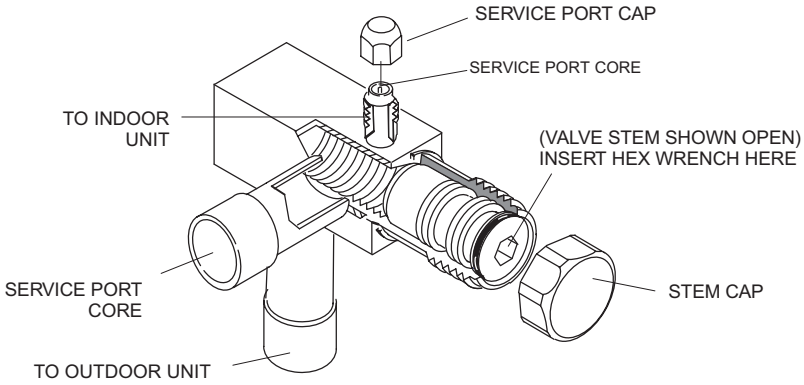

ANGLE-TYPE SERVICE VALVE (BACK-SEATED OPENED)

When service valve is **OPEN**, the service port is open to linE set, indoor and outdoor unit.

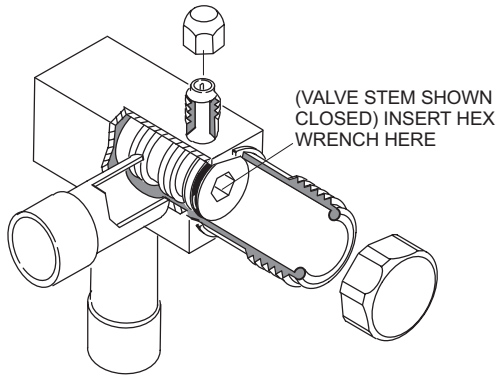

ANGLE-TYPE SERVICE VALVE (FRONT-SEATED CLOSED)

WHEN SERVICE VALVE IS **CLOSED**, THE SERVICE PORT IS OPEN TO THE LINE SET AND INDOOR UNIT.

Operating Ball Type Service Valve:

1. Remove stem cap with an appropriately sized wrench.
2. Use an appropriately sized wrenched to open. To open valve, roate stem counterclockwise 90°. To close rotate stem clockwise 90°.

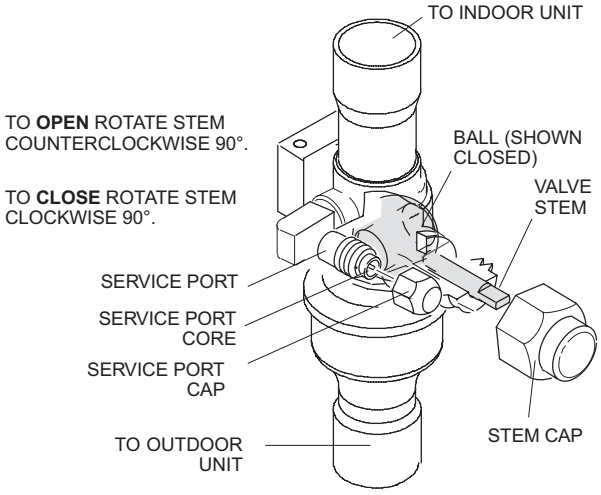

To Access Service Port:

A service port cap protects the service port core from contamination and serves as the primary leak seal.

1. Remove service port cap with an appropriately sized wrench.
2. Connect gauge set to service port.
3. When testing is completed, replace service port cap and tighten as follows:
   - With torque wrench: Finger tighten and torque cap per table 3.
   - Without torque wrench: Finger tighten and use an appropriately sized wrench to turn an additional 1/6 turn clockwise.

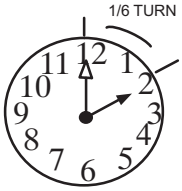

Reinstall Stem Cap:

Stem cap protects the valve stem from damage and serves as the primary seal. Replace the stem cap and tighten as follows:

- With Torque Wrench: Finger tighten and then torque cap per table 3.
- Without Torque Wrench: Finger tighten and use an appropriately sized wrench to turn an additional 1/12 turn clockwise.

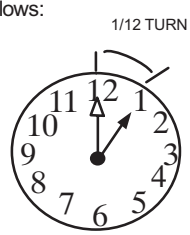

NOTE — A label with specific torque requirements may be affixed to the stem cap. If the label is present, use the specified torque.

FIGURE 4. Angle and Ball Service Valves

Unit Placement

See Unit Dimensions on page 4 for sizing mounting slab, platforms or supports.

⚠ CAUTION

In order to avoid injury, take proper precaution when lifting heavy objects..

POSITIONING CONSIDERATIONS

Consider the following when positioning the unit:

- Some localities are adopting sound ordinances based on the unit's sound level registered from the adjacent property, not from the installation property. Install the unit as far as possible from the property line.
- When possible, do not install the unit directly outside a window. Glass has a very high level of sound transmission. For proper placement of unit in relation to a window see the provided illustration in figure 6, detail A.

PLACING UNIT ON SLAB

When installing unit at grade level, the top of the slab should be high enough above grade so that water from higher ground will not collect around the unit. The slab should have a slope tolerance as described in figure 6, detail B.

***NOTE** – If necessary for stability, anchor unit to slab as described in figure 6, detail D.*

ELEVATING THE UNIT

Units are outfitted with elongated support feet as illustrated in figure 6, detail C.

If additional elevation is necessary, raise the unit by extending the height of the unit support feet. Use a 2-inch (50.8mm) Schedule 40 female threaded adapter to raise the height of the unit.

The specified coupling will fit snugly into the recessed portion of the feet. Use additional 2-inch (50.8mm) Schedule 40 male threaded adaptors which can be threaded into the female threaded adaptors to make additional adjustments to the level of the unit.

***NOTE** – Keep the height of extenders short enough to ensure a sturdy installation. If it is necessary to extend the height further than what is stable, consider a different type of field-fabricated framework that is sturdy enough for greater heights.*

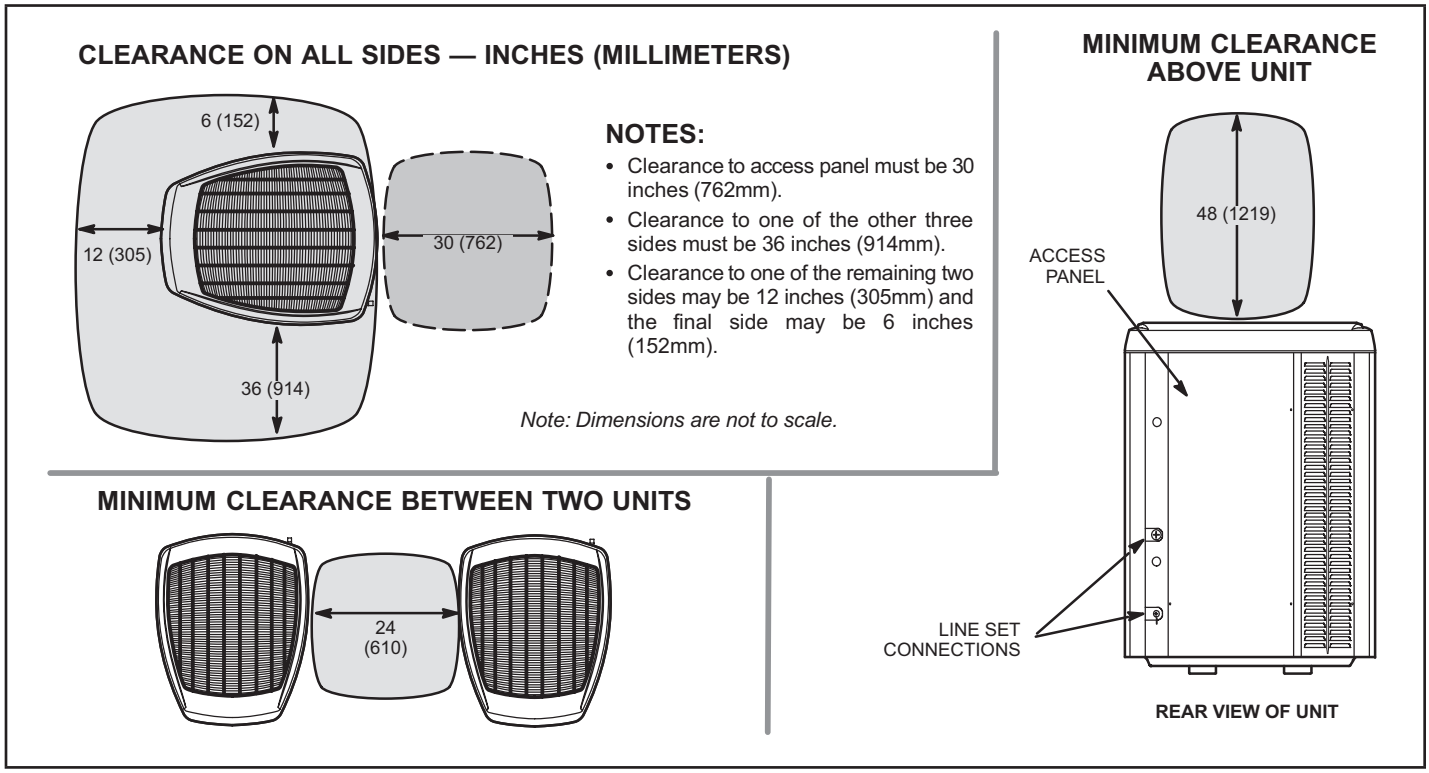

FIGURE 5. Installation Clearances

STABILIZING UNIT ON UNEVEN SURFACES

⚠ IMPORTANT

Unit Stabilizer Bracket Use (field-provided):

Always use stabilizers when unit is raised above the factory height. (Elevated units could become unstable in gusty wind conditions.)

Stabilizers may be used on factory height units when mounted on unstable an uneven surface..

1 - Remove the louvered panel from each side to expose the unit base.

2 - Install the brackets as illustrated in figure 6, detail D using conventional practices.

3 - Replace the panels after installation is complete.

ROOF MOUNTING

Locate the unit above a load-bearing wall or area of the roof that can adequately support the unit. Consult local codes for rooftop applications.

⚠ NOTICE

Roof Damage!

This system contains both refrigerant and oil. Some rubber roofing material may absorb oil, causing the rubber to swell. Bubbles in the rubber roofing material can cause leaks. Protect the roof surface to avoid exposure to refrigerant and oil during service and installation. Failure to follow this notice could result in damage to roof surface.

DETAIL A

INSTALL UNIT AWAY FROM WINDOWS

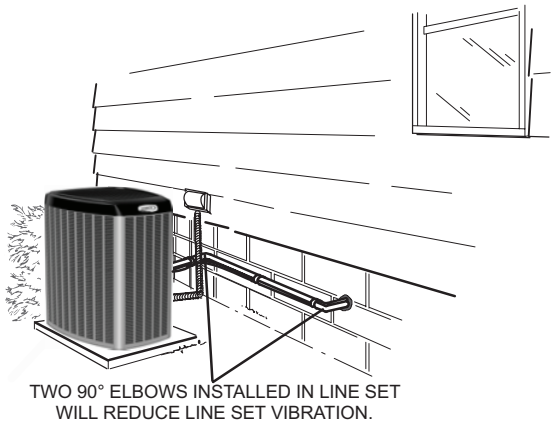

Outside Unit Placement

DETAIL B

INSTALL UNIT LEVEL OR, IF ON A SLOPE, MAINTAIN SLOPE TOLERANCE OF 2 DEGREES (OR 2 INCHES PER 5 FEET [50 MM PER 1.5 M]) AWAY FROM BUILDING STRUCTURE.

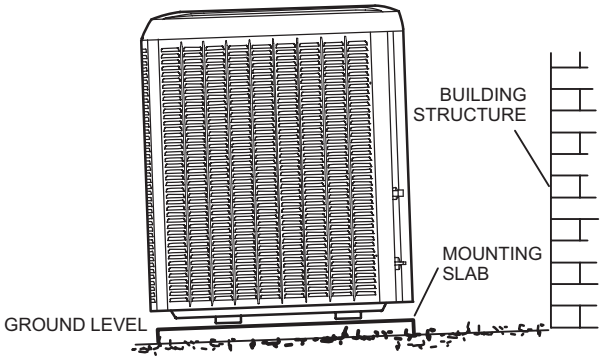

Slab Mounting at Ground Level

DETAIL C

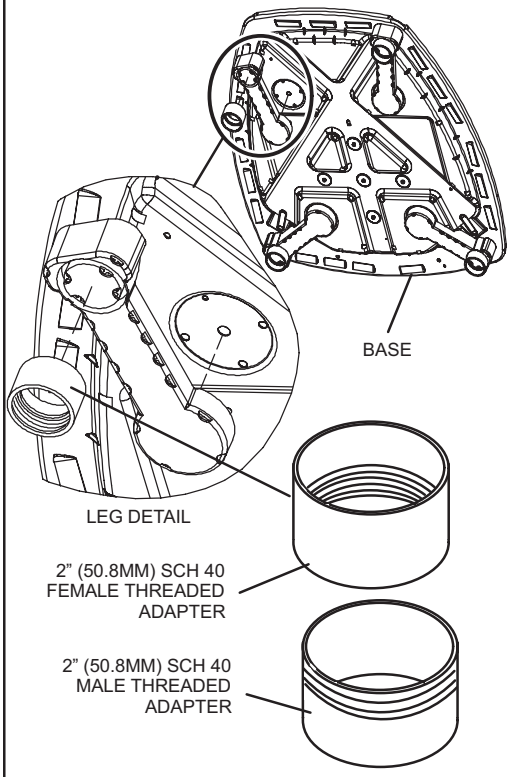

USE ADDITIONAL 2” SCH 40 MALE THREADED ADAPTERS WHICH CAN BE THREADED INTO THE FEMALE THREADED ADAPTERS TO MAKE ADDITIONAL ADJUSTMENTS TO THE LEVEL OF THE UNIT.

Elevated Slab Mounting using Feet Extenders

DETAIL D

Slab Side Mounting

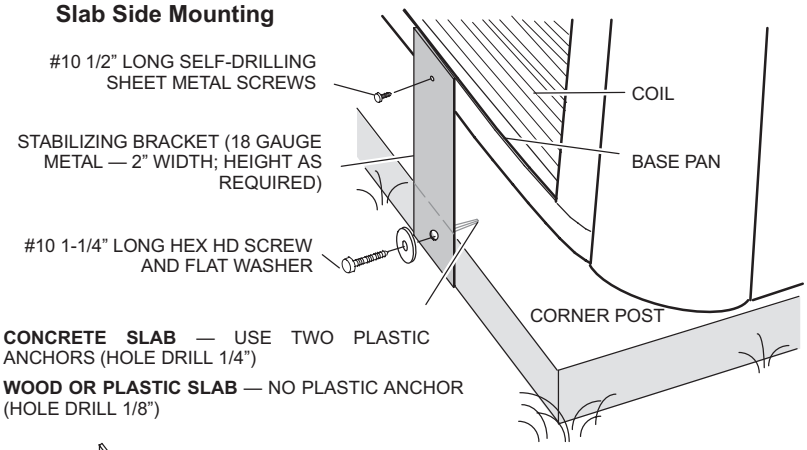

CONCRETE SLAB — USE TWO PLASTIC ANCHORS (HOLE DRILL 1/4”)

WOOD OR PLASTIC SLAB — NO PLASTIC ANCHOR (HOLE DRILL 1/8”)

Deck Top Mounting

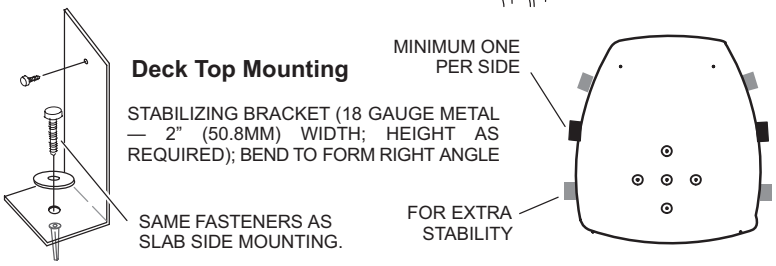

ONE BRACKET PER SIDE (MIN.); FOR EXTRA STABILITY, TWO BRACKETS PER SIDE, 2” (50.8MM) FROM EACH CORNER.

Stabilizing Unit on Uneven Surfaces

IMPORTANT — To help stabilize an outdoor unit, some installations may require strapping the unit to the pad using brackets and anchors commonly available in the marketplace.

FIGURE 6. Placement and Slab Mounting

Removing and Installing Panels

LOUVERED PANEL REMOVAL

Remove the louvered panels as follows:

1. Remove two screws, allowing the panel to swing open slightly.
2. Hold the panel firmly throughout this procedure. Rotate bottom corner of panel away from hinged corner post until lower three tabs clear the slots as illustrated in **Detail B.**
3. Move panel down until lip of upper tab clears the top slot in corner post as illustrated in **Detail A**.

LOUVERED PANEL INSTALLATION

Position the panel almost parallel with the unit as illustrated in **Detail D** with the screw side as close to the unit as possible. Then, in a continuous motion:

1. Slightly rotate and guide the lip of the top tab inward as illustrated in **Detail A** and **C**; then upward into the top slot of the hinge corner post.
2. Rotate the panel until it is completely vertical to fully engage all of the tabs.
3. Holding the panel's hinged side firmly in place, close the right-hand side of the panel, aligning the screw holes.
4. When panel is correctly positioned and aligned, insert the screws and tighten.

IMPORTANT! DO NOT ALLOW PANELS TO HANG ON UNIT BY TOP TAB. TAB IS FOR ALIGNMENT AND NOT DESIGNED TO SUPPORT WEIGHT OF PANEL.

PANEL SHOWN SLIGHTLY ROTATED TO ALLOW TOP TAB TO EXIT (OR ENTER) TOP SLOT FOR REMOVING (OR INSTALLING) PANEL.

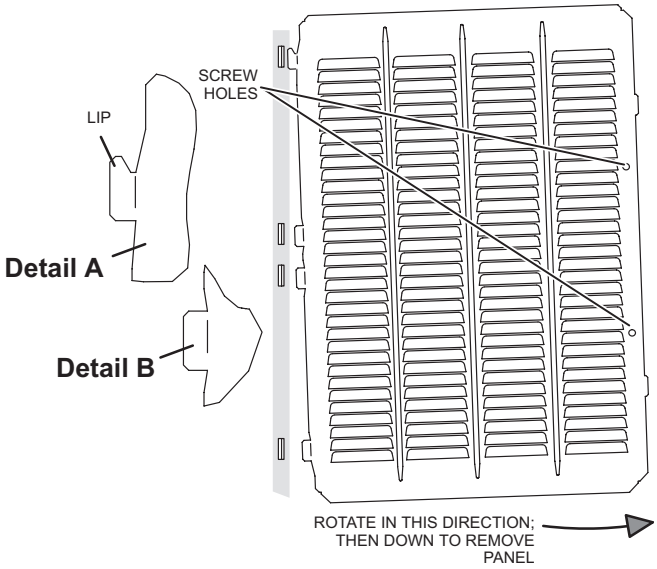

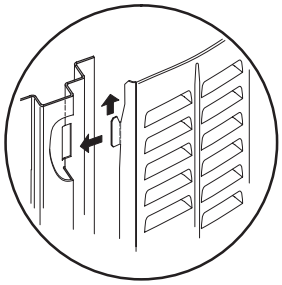

Detail C

MAINTAIN MINIMUM PANEL ANGLE (AS CLOSE TO PARALLEL WITH THE UNIT AS POSSIBLE) WHILE INSTALLING PANEL.

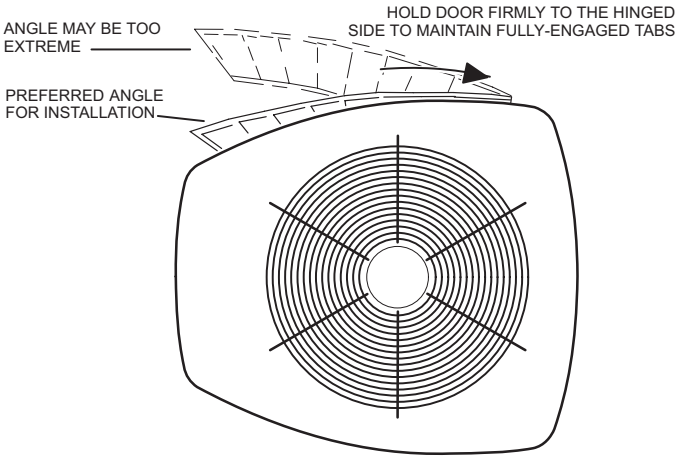

FIGURE 7. Removing and Installing Panels

New or Replacement Line Set

⚠ IMPORTANT

If this unit is being matched with an approved line set or indoor unit coil that was previously charged with mineral oil, or if it is being matched with a coil which was manufactured before January of 1999, the coil and line set must be flushed prior to installation. Take care to empty all existing traps. Polyvinyl ether (PVE) and polyol ester (POE) oils are used in Lennox variable-capacity units charged with HFC-410A refrigerant. Residual mineral oil can act as an insulator, preventing proper heat transfer. It can also clog the expansion device and reduce system performance and capacity. Failure to properly flush the system per this instruction and the detailed Installation and Service Procedures manual will void the warranty.

Flush the existing line set per the following instructions. For more information, refer to the Installation and Service Procedures manual available on LennoxPros.com. CAUTION - DO NOT attempt to flush and re-use existing line sets or indoor coil when the system contains contaminants (i.e., compressor burn out).

Polyvinyl ether (PVE) oil is used in SL28XCV units. For installations of SL28XCV units with refrigerant lines or coils previously charged with R410A and POE oil, Lennox recommends flushing the existing lines and coil with R410A refrigerant to remove excess POE oil that may be in the system.

If a new line set is being installed, size the piping per table 2.

TABLE 2

REFRIGERANT LINE SET – INCHES (MM)

Model	Valve Field Connections		Recommended Line Set		
	Liquid Line	Vapor Line	Liquid Line	Vapor Line	L15 Line Sets
-024	3/8 in. (10 mm)	3/4 in. (19 mm)	3/8 in. (10 mm)	3/4 in. (19 mm)	L15-41 15 ft. - 50 ft. (4.6 m - 15 m)
-036	3/8 in. (10 mm)	7/8 in. (22 mm)	3/8 in. (10 mm)	7/8 in. (22 mm)	L15-65 15 ft. - 50 ft. (4.6 m - 15 m)
-048					
-060	3/8 in. (10 mm)	1-1/8 in. (28 mm)	3/8 in. (10 mm)	1-1/8 in. (28 mm)	Field Fabricated

NOTE - Some applications may require a field-provided 7/8" to 1-1/8" adapter.

NOTE *- When installing refrigerant lines longer than 50 feet, refer to the Refrigerant Piping Design and Fabrication Guidelines manual available on LennoxPros.com (Corp. 9351-L9), or contact the Technical Support Department Product Application group for assistance.*

NOTE *- For new or replacement line set installation, refer to Service and Application Note - Corp. 9112-L4 (C-91-4).*

⚠ WARNING

When using a high pressure gas such as nitrogen to pressurize a refrigeration or air conditioning system, use a regulator that can control the pressure down to 1 or 2 psig (6.9 to 13.8 kPa).

⚠ WARNING

Refrigerant can be harmful if it is inhaled. Refrigerant must be used and recovered responsibly.

Failure to follow this warning may result in personal injury or death.

⚠ WARNING

Fire, Explosion and Personal Safety hazard. Failure to follow this warning could result in damage, personal injury or death.

Never use oxygen to pressurize or purge refrigeration lines. Oxygen, when exposed to a spark or open flame, can cause fire and/or an explosion, that could result in property damage, personal injury or death.

⚠ WARNING

Polyvinyl ether (PVE) oils used with HFC-410A refrigerant absorb moisture very quickly. It is very important that the refrigerant system be kept closed as much as possible. DO NOT remove line set caps or service valve stub caps until you are ready to make connections.

The SL28XCV is a variable-capacity cooling system utilizing variable speed compressor technology. With the variable speed compressor and variable pumping capacity, additional consideration must be given to refrigerant piping sizing and application. The guidelines below are to be used exclusively for the SL28XCV systems.

COOLING SYSTEM (HFC410A)

- Total equivalent length equals 180 feet (piping and all fittings included).

NOTE *– Length is general guide. Lengths may be more or less, depending on remaining system design factors.*

- Maximum linear (actual) length = 150 feet.
- Maximum linear liquid lift = 60 feet.

NOTE *– Maximum lifts are dependent on total length, number of elbows, etc. that contribute to total pressure drop.*

- Maximum length vapor riser = 60 feet.
- **Up to 50 Linear Feet:** Use rated line sizes listed in tables 2 and 3.

- **Between 51 and 150 Linear Feet:** Crankcase heater and nonbleed port TXV factory installed. No additional components required. Vertical vapor riser must be sized to the vapor riser listed in the table 4 on systems with line sets longer than 51 feet. Use tables 3 and 4 to determine the correct liquid and vapor line sizes.
- **Over 150 Linear Feet:** not recommended.
- Additional oil is not required for systems with line lengths up to 150 feet.

SUCTION TRAPS

For systems with the outdoor unit 5 - 60 feet above the indoor unit, one trap must be installed at the bottom of the suction riser.

TABLE 3. Standard Refrigerant Line Set – Up to 50 Linear Feet in Length

Inches (mm)					
	Valve Size Connections		Recommended Line Sets		
SL28XCV*	Liquid Line	Suction Line	L15 Line Set Model	Line Set Length	Catalog Number
-024	3/8” (10 mm)	3/4” (19 mm)	L15-41-30	30 feet (9.1 m)	89J60
-036 -048	3/8” (10 mm)	7/8” (22 mm)	L15-65-40	40 feet (12.2 m)	89J61
			L15-65-50	50 feet (15.2 m)	89J62
-060	3/8” (10 mm)	1-1/8” (29 mm) **	Field-fabricated		

* Applicable to all minor revision numbers unless otherwise specified.
** Some applications may require a field-provided 1-1/8” to 7/8” adapter.

TABLE 4. SL28XCV Line Set Guidelines – 51 to 150 Linear Feet in Length

Model	Maximum Total Equivalent Length (ft)	Maximum Linear (actual) Length (ft)	Maximum Vapor Riser (ft)	Maximum Linear Liquid Lift (ft)	Preferred Vapor Line Sizes for Horizontal Runs	Required Vapor Riser Size
-024	180	150	60	60	7/8”	5/8”
-036	180	150	60	60	7/8”	3/4”
-048	180	150	60	60	7/8”	7/8”
-060	180	150	60	60	7/8”	7/8”

TABLE 5. Liquid Line Diameter Selection Table

Unit	Line Size	Total Linear Length (feet)						Max. Elevation (ft)
		25	50	75	100	125	150	
-024	5/16”	25	50	55	48	40	33	
	3/8”	25	50	60	60	60	60	
-036	3/8”	25	50	60	56	51	45	
	1/2”	25	50	60	60	60	60	
-048	3/8”	25	50	50	41	31	22	
	1/2”	25	50	60	60	60	60	
-060	3/8”	25	50	36	22	8	NR	
	1/2”	25	50	60	60	60	59	

NOTE - *Shaded rows indicate rated liquid line size*

A. Find your unit on the left side of the table.
B. Start with the rated liquid line size (shaded row) on the outdoor unit
C. Select the actual Total Linear Length of your system shown at the top of the table.
D. The elevation listed in the table is the maximum allowed for the liquid line listed.
E. Select or consider the larger liquid line size shown in the table if the elevation does not meet your requirements.

NOTE - *For new or replacement line set installation, refer to Service and Application Note - Corp. 9112-L4 (C-91-4).*

LINE SET

IMPORTANT — Refrigerant lines must not contact structure.

INSTALLATION

Line Set Isolation — The following illustrations are examples of proper refrigerant line set isolation:

REFRIGERANT LINE SET — TRANSITION FROM VERTICAL TO HORIZONTAL

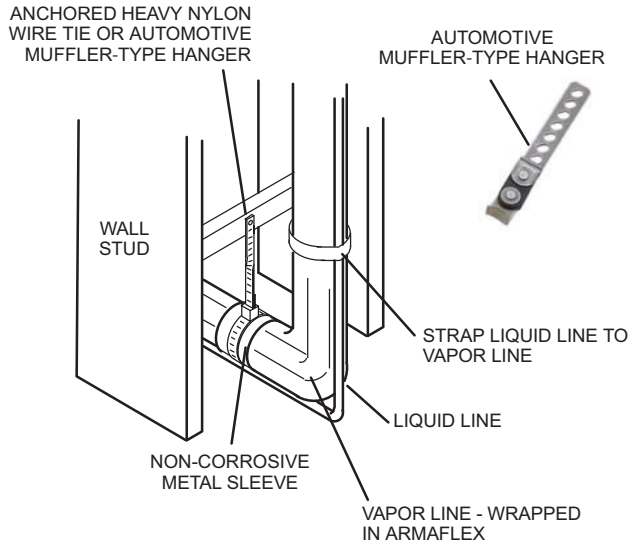

REFRIGERANT LINE SET — INSTALLING HORIZONTAL RUNS

To hang line set from joist or rafter, use either metal strapping material or anchored heavy nylon wire ties.

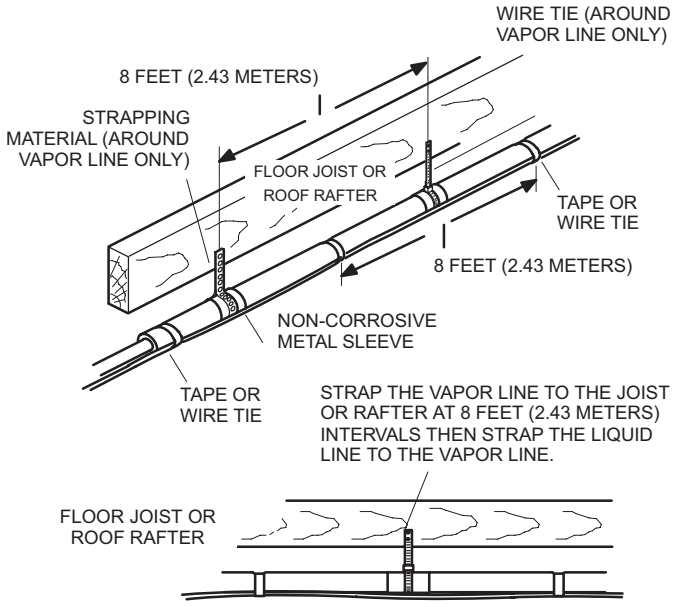

REFRIGERANT LINE SET — INSTALLING VERTICAL RUNS (NEW CONSTRUCTION SHOWN)

NOTE — Insulate liquid line when it is routed through areas where the surrounding ambient temperature could become higher than the temperature of the liquid line or when pressure drop is equal to or greater than 20 psig.

IMPORTANT — Refrigerant lines must not contact wall

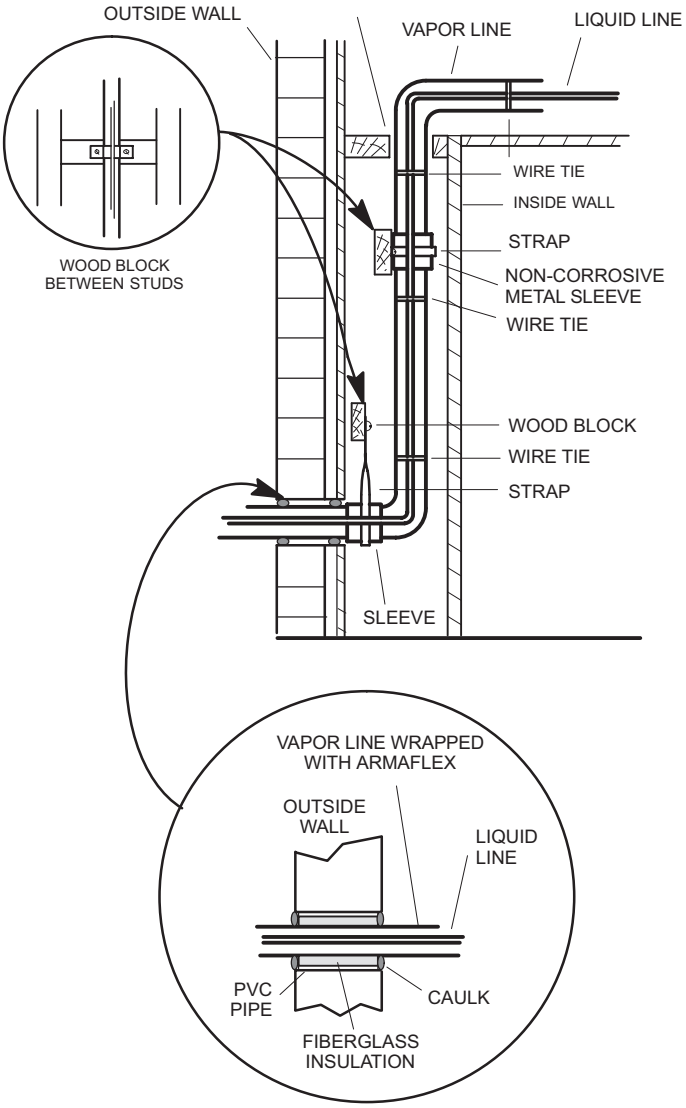

***NOTE** — Similar installation practices should be used if line set is to be installed on exterior of outside wall.*

WARNING — Polyol ester (POE) oils used with HFC-410A refrigerant absorb moisture very quickly. It is very important that the refrigerant system be kept closed as much as possible. DO NOT remove line set caps or service valve stub caps until you are ready to make connections.

FIGURE 8. Line Set Installation

Brazing Connections

Use the procedures outlined in figures 5 and 6 for brazing line set connections to service valves.

⚠ WARNING

Danger of fire. Bleeding the refrigerant charge from only the high side may result in pressurization of the low side shell and suction tubing. Application of a brazing torch to a pressurized system may result in ignition of the refrigerant and oil mixture. Check the high and low pressures before applying heat.

⚠ WARNING

When using a high pressure gas such as nitrogen to pressurize a refrigeration or air conditioning system, use a regulator that can control the pressure down to 1 or 2 psig (6.9 to 13.8 kPa).

⚠ CAUTION

Brazing alloys and flux contain materials which are hazardous to your health.

Avoid breathing vapors or fumes from brazing operations. Perform operations only in well-ventilated areas.

Wear gloves and protective goggles or face shield to protect against burns.

Wash hands with soap and water after handling brazing alloys and flux.

⚠ IMPORTANT

Allow braze joint to cool before removing the wet rag from the service valve. Temperatures above 250ºF can damage valve seals.

⚠ IMPORTANT

Use silver alloy brazing rods with 5% minimum silver alloy for copper-to-copper brazing. Use 45% minimum alloy for copper-to-brass and copper-to-steel brazing.

⚠ WARNING

Fire, Explosion and Personal Safety hazard. Failure to follow this warning could result in damage, personal injury or death.

Never use oxygen to pressurize or purge refrigeration lines. Oxygen, when exposed to a spark or open flame, can cause fire and/or an explosion, that could result in property damage, personal injury or death.

1 PIPING PANEL REMOVAL AND LINE SET PREPARATION

Remove piping panel for easier access to service valves. Cut ends of the refrigerant lines square (free from nicks or dents) and debur the ends. The pipe must remain round. Do not crimp end of the line.

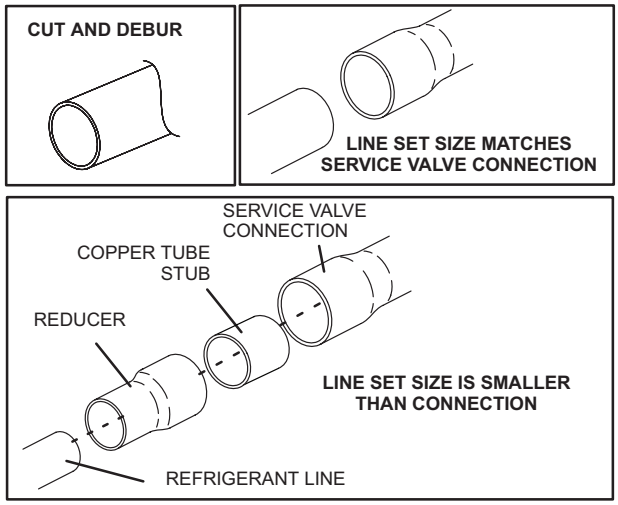

DO NOT CRIMP SERVICE VALVE CONNECTOR WHEN PIPE IS SMALLER THAN CONNECTION

2 CAP AND CORE REMOVAL

Remove service cap and core from both the suction and liquid line service ports.

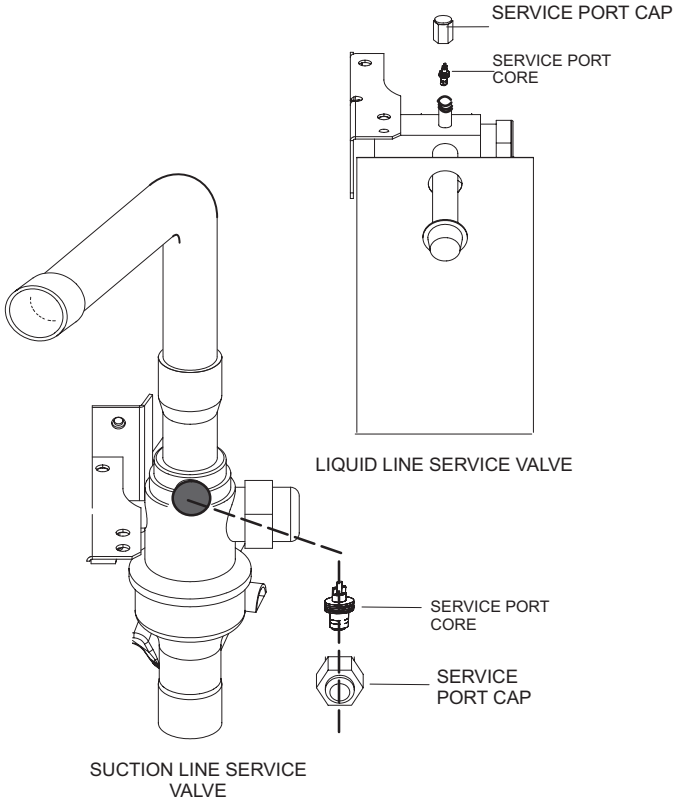

3 ATTACH THE MANIFOLD GAUGE SET FOR BRAZING LIQUID AND SUCTION LINE SERVICE VALVES

A. Connect gauge set low pressure side to liquid line service valve (service port).

B. Connect gauge set center port to bottle of nitrogen with regulator.

C. With valve core removed from the suction line service port, nitrogen flow will have an exit point.

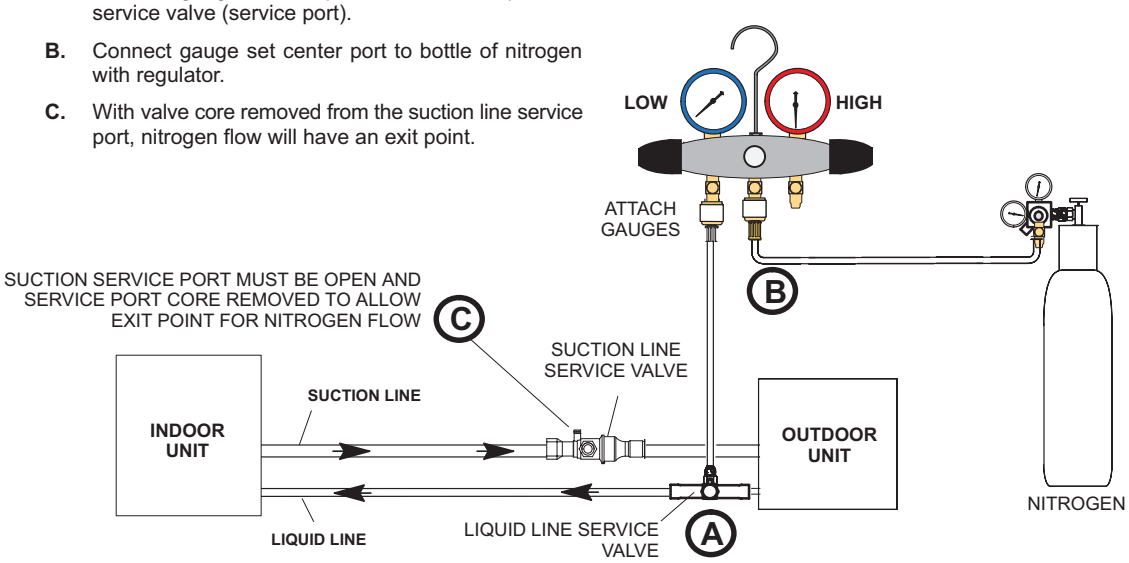

FIGURE 9. Brazing Procedures

4 WRAP SERVICE VALVES

To help protect service valve seals during brazing, wrap water-saturated cloths around service valve bodies and copper tube stubs. Use additional water-saturated cloths underneath the valve body to protect the base paint.

5 FLOW NITROGEN

Flow regulated nitrogen (at 1 to 2 psig) through the refrigeration gauge set into the valve stem port connection on the liquid service valve and out of the suction / vapor valve stem port. See steps **3A, 3B** and **3C** on manifold gauge set connections.

6 BRAZE LINE SET

Wrap both service valves with water-saturated cloths as illustrated here and as mentioned in step 4, before brazing to line set. Cloths must remain water-saturated throughout the brazing and cool-down process.

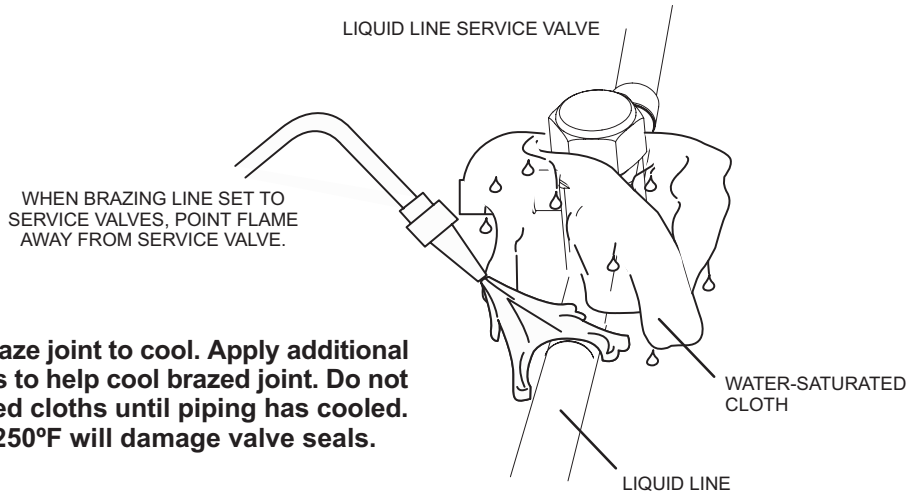

IMPORTANT - Allow braze joint to cool. Apply additional water-saturated cloths to help cool brazed joint. Do not remove water-saturated cloths until piping has cooled. Temperatures above 250ºF will damage valve seals.

WARNING

FIRE, PERSONAL INJURY, OR PROPERTY DAMAGE may result if you do not wrap a water-saturated cloth around both liquid and suction line service valve bodies and copper tube stub while brazing the line set! The braze, when complete, must be quenched with water to absorb any residual heat.

Do not open service valves until refrigerant lines and indoor coil have been leak-tested and evacuated. Refer to Installation and Service Procedures manual found on LennoxPros.com.

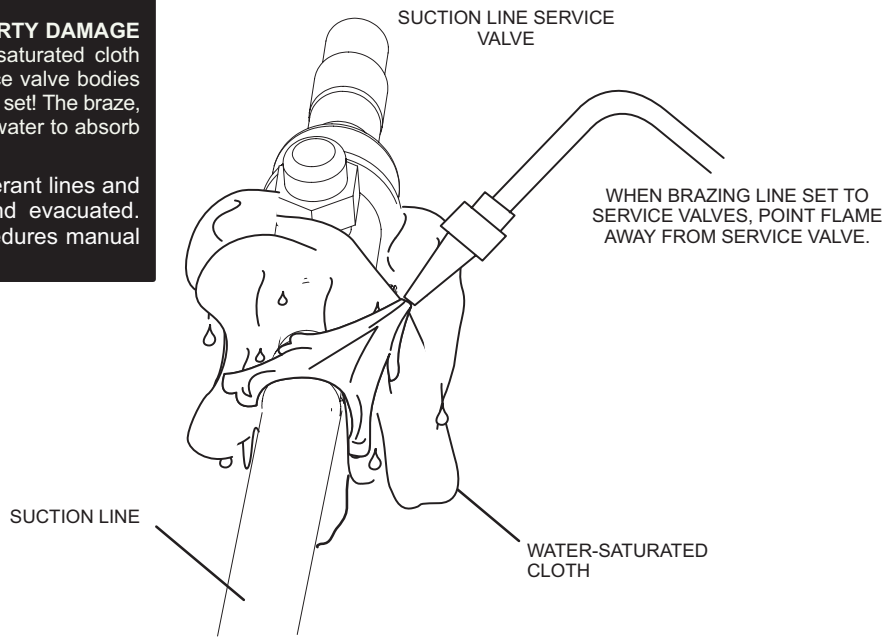

7 PREPARATION FOR NEXT STEP

Disconnect manifold gauge set from service ports after all connections have been brazed. Apply additional water-saturated cloths to both service valves to cool piping. Once piping is cool, remove all water-saturated cloths.

FIGURE 10. Brazing Procedures (Cont'd)

Flushing Line Set and Indoor Coil

1A TYPICAL EXISTING FIXED ORIFICE REMOVAL PROCEDURE (UNCASED COIL SHOWN)

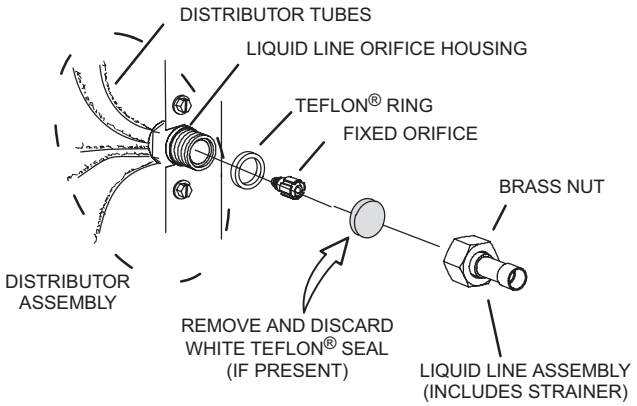

A On fully cased coils, remove the coil access and plumbing panels.

B Remove any shipping clamps holding the liquid line and distributor assembly.

C Using two wrenches, disconnect liquid line from liquid line orifice housing. Take care not to twist or damage distributor tubes during this process.

D Remove and discard fixed orifice, valve stem assembly if present and Teflon® washer as illustrated above.

E Use a field-provided fitting to temporarily reconnect the liquid line to the indoor unit's liquid line orifice housing.

OR

1B TYPICAL EXISTING EXPANSION VALVE REMOVAL PROCEDURE (UNCASED COIL SHOWN)

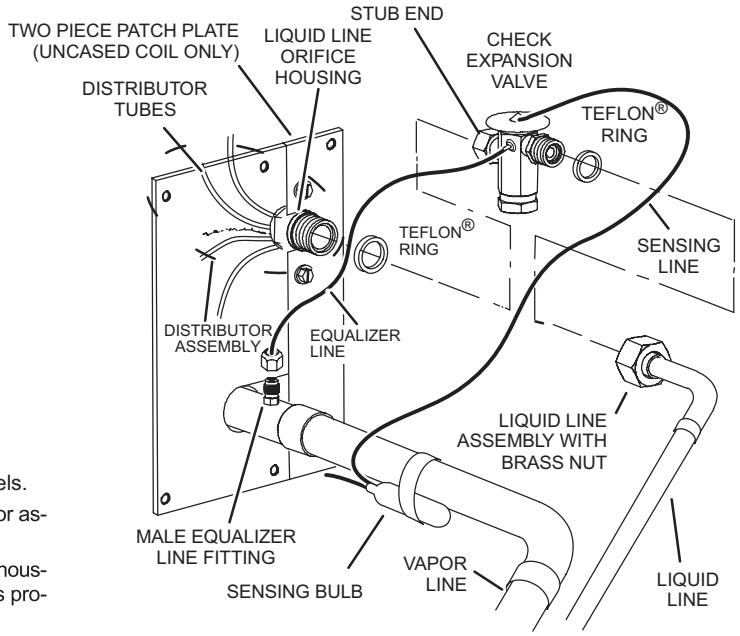

A On fully cased coils, remove the coil access and plumbing panels.

B Remove any shipping clamps holding the liquid line and distributor assembly.

C Disconnect the equalizer line from the check expansion valve equalizer line fitting on the vapor line.

D Remove the vapor line sensing bulb.

E Disconnect the liquid line from the check expansion valve at the liquid line assembly.

F Disconnect the check expansion valve from the liquid line orifice housing. Take care not to twist or damage distributor tubes during this process.

G Remove and discard check expansion valve and the two Teflon® rings.

H Use a field-provided fitting to temporary reconnect the liquid line to the indoor unit's liquid line orifice housing.

2 CONNECT GAUGES AND EQUIPMENT FOR FLUSHING PROCEDURE

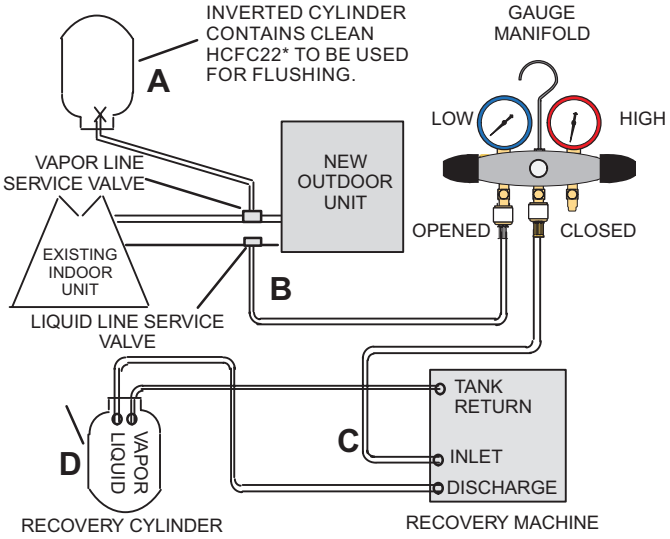

A Inverted HCFC-22 cylinder with clean refrigerant* to the vapor service valve.

B HCFC-22 gauge set (low side) to the liquid line valve.

C HCFC-22 gauge set center port to inlet on the recovery machine with an empty recovery tank to the gauge set.

D Connect recovery tank to recovery machines per machine instructions.

3 FLUSHING LINE SET

The line set and indoor unit coil must be flushed with at least the same amount of clean refrigerant* that previously charged the system. Check the charge in the flushing cylinder before proceeding.

A Set the recovery machine for liquid recovery and start the recovery machine. Open the gauge set valves to allow the recovery machine to pull a vacuum on the existing system line set and indoor unit coil.

B Invert the cylinder of clean HCFC-22* and open its valve to allow liquid refrigerant to flow into the system through the vapor line valve. Allow the refrigerant to pass from the cylinder and through the line set and the indoor unit coil before it enters the recovery machine.

C After all of the liquid refrigerant has been recovered, switch the recovery machine to vapor recovery so that all of the HCFC-22 vapor is recovered. Allow the recovery machine to pull the system down to 0.

D Close the valve on the inverted HCFC-22 drum and the gauge set valves. Pump the remaining refrigerant out of the recovery machine and turn the machine off.

***IMPORTANT - Clean refrigerant is any refrigerant in a system that has not had compressor burn out. If the system has experienced burn out, it is recommended that the existing line set and indoor coil be replaced.**

FIGURE 11. Removing Metering Device and Flushing

FLUSHING LINE SET AND INDOOR COIL (2 OF 2)

4 TYPICAL NEW CHECK EXPANSION VALVE INSTALLATION PROCEDURE

THIS OUTDOOR UNIT IS DESIGNED FOR USE IN SYSTEMS THAT USE A CHECK EXPANSION VALVE METERING DEVICE. SEE THE UNIT *PRODUCT SPECIFICATIONS* FOR APPROVED EXPANSION VALVE KIT MATCH-UPS AND APPLICATION INFORMATION.

THE EXPANSION VALVE UNIT CAN BE INSTALLED INTERNAL OR EXTERNAL TO THE INDOOR COIL. IN APPLICATIONS WHERE AN UNCASED COIL IS BEING INSTALLED IN A FIELD-PROVIDED PLENUM, INSTALL THE CHECK EXPANSION VALVE IN A MANNER THAT WILL PROVIDE ACCESS FOR FIELD SERVICING OF THE EXPANSION VALVE. REFER TO BELOW ILLUSTRATION FOR REFERENCE DURING INSTALLATION OF EXPANSION VALVE UNIT.

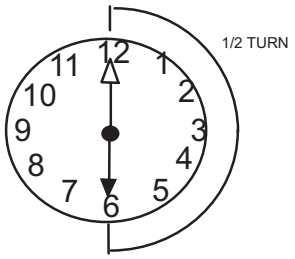

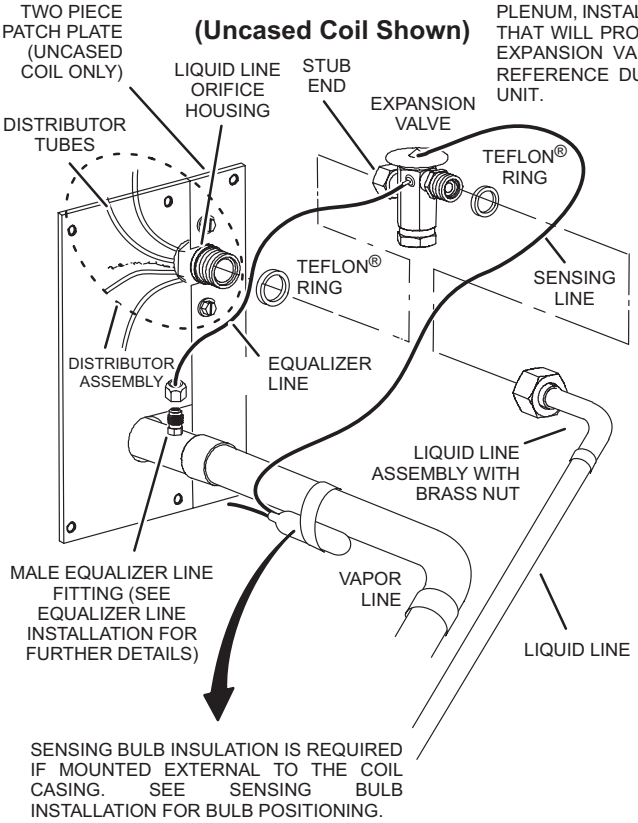

A. REMOVE THE FIELD-PROVIDED FITTING THAT TEMPORARILY RECONNECTED THE LIQUID LINE TO THE INDOOR UNIT'S DISTRIBUTOR ASSEMBLY.

B. INSTALL ONE OF THE PROVIDED TEFLON® RINGS AROUND THE STUBBED END OF THE EXPANSION VALVE AND LIGHTLY LUBRICATE THE CONNECTOR THREADS AND EXPOSE SURFACE OF THE TEFLON® RING WITH REFRIGERANT OIL.

C. ATTACH THE STUBBED END OF THE EXPANSION VALVE TO THE LIQUID LINE ORIFICE HOUSING. FINGER TIGHTEN AND USE AN APPROPRIATELY SIZED WRENCH TO TURN AN ADDITIONAL 1/2 TURN CLOCKWISE AS ILLUSTRATED IN THE FIGURE ABOVE, OR 20 FT-LB.

D. PLACE THE REMAINING TEFLON® WASHER AROUND THE OTHER END OF THE EXPANSION VALVE. LIGHTLY LUBRICATE CONNECTOR THREADS AND EXPOSE SURFACE OF THE TEFLON® RING WITH REFRIGERANT OIL.

E. ATTACH THE LIQUID LINE ASSEMBLY TO THE EXPANSION VALVE. FINGER TIGHTEN AND USE AN APPROPRIATELY SIZED WRENCH TO TURN AN ADDITIONAL 1/2 TURN CLOCKWISE AS ILLUSTRATED IN THE FIGURE ABOVE OR 20 FT-LB.

SENSING BULB INSTALLATION

A. ATTACH THE VAPOR LINE SENSING BULB IN THE PROPER ORIENTATION AS ILLUSTRATED TO THE RIGHT USING THE CLAMP AND SCREWS PROVIDED.

***NOTE** - CONFIRM PROPER THERMAL CONTACT BETWEEN VAPOR LINE AND CHECK EXPANSION BULB BEFORE INSULATING THE SENSING BULB ONCE INSTALLED.*

B. CONNECT THE EQUALIZER LINE FROM THE EXPANSION VALVE TO THE EQUALIZER VAPOR PORT ON THE VAPOR LINE. FINGER TIGHTEN THE FLARE NUT PLUS 1/8 TURN (7 FT-LBS) AS ILLUSTRATED BELOW.

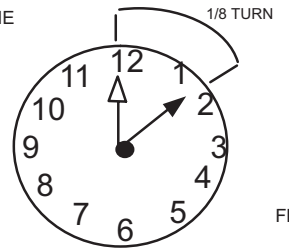

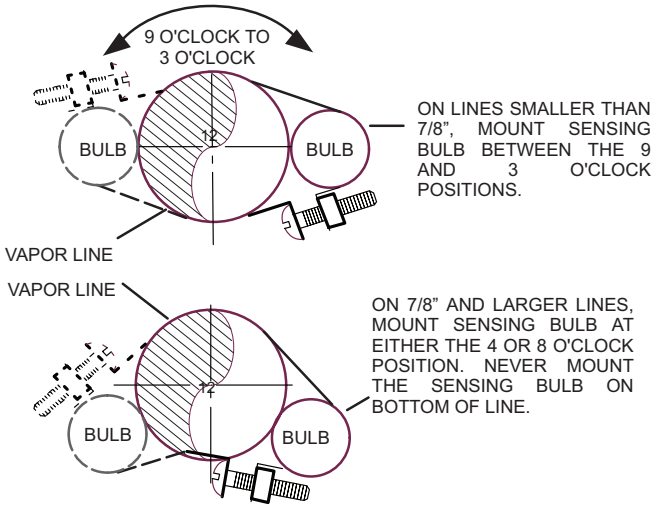

NOTE - NEVER MOUNT THE SENSING BULB ON BOTTOM OF LINE.

EQUALIZER LINE INSTALLATION

REMOVE AND DISCARD EITHER THE FLARE SEAL CAP OR FLARE NUT WITH COPPER FLARE SEAL BONNET FROM THE EQUALIZER LINE PORT ON THE VAPOR LINE AS ILLUSTRATED IN THE FIGURE TO THE RIGHT.

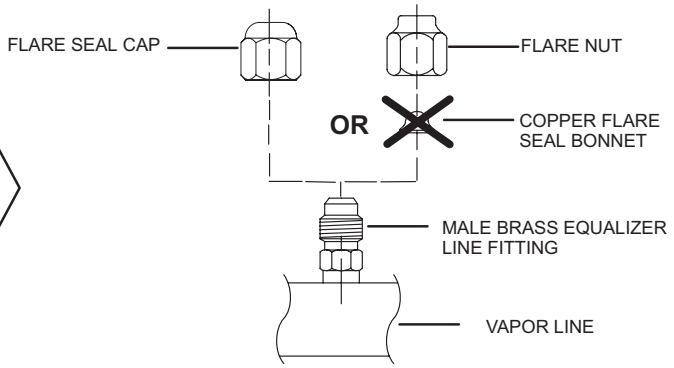

⚠ IMPORTANT

The Environmental Protection Agency (EPA) prohibits the intentional venting of HFC refrigerants during maintenance, service, repair and disposal of appliance.

Approved methods of recovery, recycling or reclaiming must be followed.

⚠ IMPORTANT

If this unit is being matched with an approved line set or indoor unit coil that was previously charged with mineral oil, or if it is being matched with a coil which was manufactured before January of 1999, the coil and line set must be flushed prior to installation. Take care to empty all existing traps. Polyvinyl ether (PVE) oils are used in Lennox variable-capacity units charged with HFC-410A refrigerant. Residual mineral oil can act as an insulator, preventing proper heat transfer. It can also clog the expansion device and reduce system performance and capacity. Failure to properly flush the system per this instruction and the detailed Installation and Service Procedures manual will void the warranty.

Leak Testing the System

⚠ WARNING

When using a high pressure gas such as nitrogen to pressurize a refrigeration or air conditioning system, use a regulator that can control the pressure down to 1 or 2 psig (6.9 to 13.8 kPa).

⚠ IMPORTANT

Leak detector must be capable of sensing HFC refrigerant.

⚠ WARNING

Refrigerant can be harmful if it is inhaled. Refrigerant must be used and recovered responsibly.

Failure to follow this warning may result in personal injury or death.

LEAK TEST

LINE SET AND INDOOR COIL

***NOTE** - NORMALLY, THE HIGH PRESSURE HOSE IS CONNECTED TO THE LIQUID LINE PORT. HOWEVER, CONNECTING IT TO THE VAPOR PORT BETTER PROTECTS THE MANIFOLD GAUGE SET FROM HIGH PRESSURE DAMAGE.*

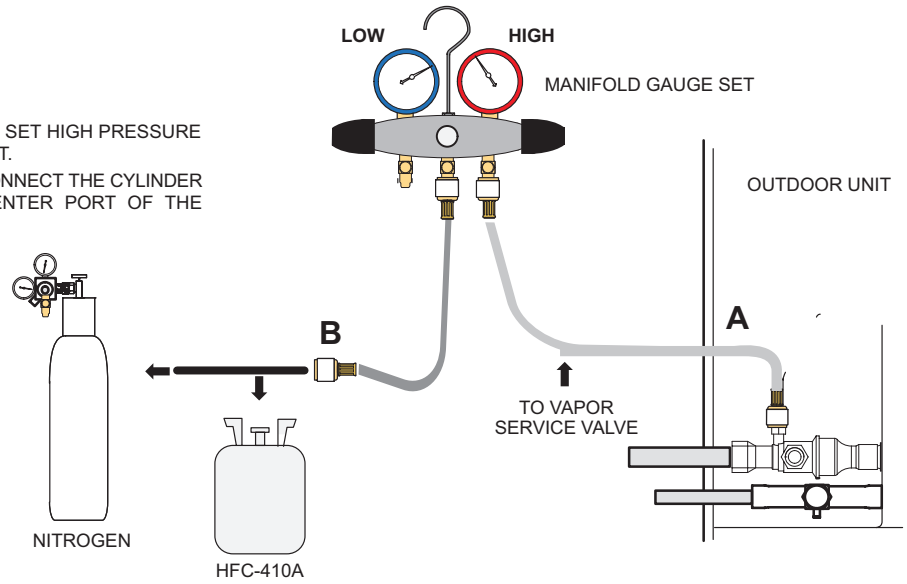

1 CONNECT GAUGE SET

A. CONNECT AN HFC-410A MANIFOLD GAUGE SET HIGH PRESSURE HOSE TO THE VAPOR VALVE SERVICE PORT.

B. WITH BOTH MANIFOLD VALVES CLOSED, CONNECT THE CYLINDER OF HFC-410A REFRIGERANT TO THE CENTER PORT OF THE MANIFOLD GAUGE SET.

NOTE - LATER IN THE PROCEDURE, THE HFC-410A CONTAINER WILL BE REPLACED BY THE NITROGEN CONTAINER.

2 TEST FOR LEAKS

AFTER THE LINE SET HAS BEEN CONNECTED TO THE INDOOR AND OUTDOOR UNITS, CHECK THE LINE SET CONNECTIONS AND INDOOR UNIT FOR LEAKS. USE THE FOLLOWING PROCEDURE TO TEST FOR LEAKS:

A. WITH BOTH MANIFOLD VALVES CLOSED, CONNECT THE CYLINDER OF HFC-410A REFRIGERANT TO THE CENTER PORT OF THE MANIFOLD GAUGE SET. OPEN THE VALVE ON THE HFC-410A CYLINDER (VAPOR ONLY).

B. OPEN THE HIGH PRESSURE SIDE OF THE MANIFOLD TO ALLOW HFC-410A INTO THE LINE SET AND INDOOR UNIT. WEIGH IN A TRACE AMOUNT OF HFC-410A *[A TRACE AMOUNT IS A MAXIMUM OF TWO OUNCES (57 G) REFRIGERANT OR THREE POUNDS (31 KPA) PRESSURE].* CLOSE THE VALVE ON THE HFC-410A CYLINDER AND THE VALVE ON THE HIGH PRESSURE SIDE OF THE MANIFOLD GAUGE SET. DISCONNECT THE HFC-410A CYLINDER.

C. CONNECT A CYLINDER OF DRY NITROGEN WITH A PRESSURE REGULATING VALVE TO THE CENTER PORT OF THE MANIFOLD GAUGE SET.

D. ADJUST DRY NITROGEN PRESSURE TO 150 PSIG (1034 KPA). OPEN THE VALVE ON THE HIGH SIDE OF THE MANIFOLD GAUGE SET IN ORDER TO PRESSURIZE THE LINE SET AND THE INDOOR UNIT.

E. AFTER A FEW MINUTES, OPEN ONE OF THE SERVICE VALVE PORTS AND VERIFY THAT THE REFRIGERANT ADDED TO THE SYSTEM EARLIER IS MEASURABLE WITH A LEAK DETECTOR.

F. AFTER LEAK TESTING, DISCONNECT GAUGES FROM SERVICE PORTS.

FIGURE 12. System Leak Test

Evacuating Line Set and Indoor Coil

1 CONNECT GAUGE SET

NOTE — Remove cores from service valves (if not already done).

A Connect low side of manifold gauge set with 1/4 SAE in-line tee to *vapor* line service valve

B Connect high side of manifold gauge set to *liquid* line service valve

C Connect micron gauge available connector on the 1/4 SAE in-line tee.

D Connect the vacuum pump (with vacuum gauge) to the center port of the manifold gauge set. The center port line will be used later for both the HFC-410A and nitrogen containers.

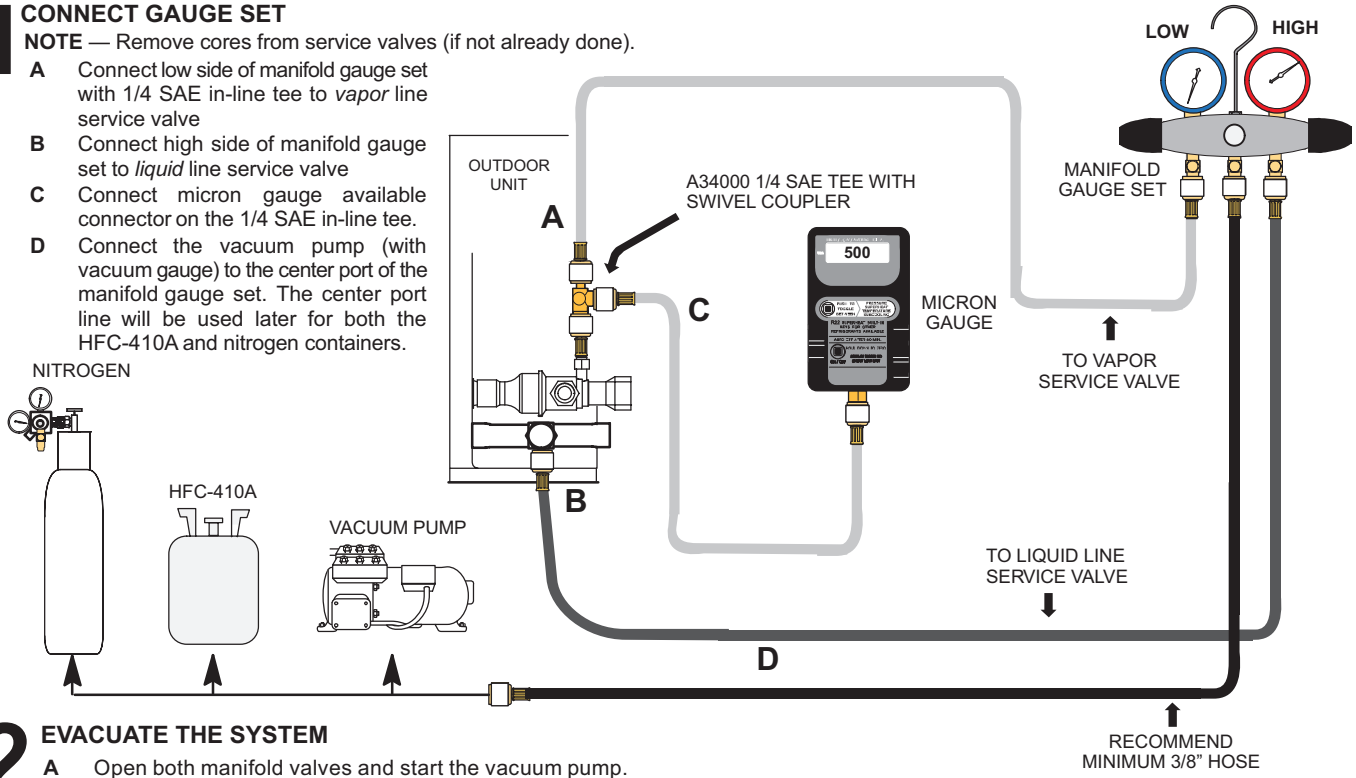

2 EVACUATE THE SYSTEM

A Open both manifold valves and start the vacuum pump.

B Evacuate the line set and indoor unit to an **absolute pressure** of 23,000 microns (29.01 inches of mercury).

***NOTE** — During the early stages of evacuation, it is desirable to close the manifold gauge valve at least once. A rapid rise in pressure indicates a relatively large leak. If this occurs, **repeat the leak testing procedure**.*

***NOTE** — The term **absolute pressure** means the total actual pressure within a given volume or system, above the absolute zero of pressure. Absolute pressure in a vacuum is equal to atmospheric pressure minus vacuum pressure.*

C When the absolute pressure reaches 23,000 microns (29.01 inches of mercury), perform the following:

- Close manifold gauge valves
- Close valve on vacuum pump
- Turn off vacuum pump
- Disconnect manifold gauge center port hose from vacuum pump
- Attach manifold center port hose to a dry nitrogen cylinder with pressure regulator set to 150 psig (1034 kPa) and purge the hose.
- Open manifold gauge valves to break the vacuum in the line set and indoor unit.
- Close manifold gauge valves.

D Shut off the dry nitrogen cylinder and remove the manifold gauge hose from the cylinder. Open the manifold gauge valves to release the dry nitrogen from the line set and indoor unit.

E Reconnect the manifold gauge to the vacuum pump, turn the pump on, and continue to evacuate the line set and indoor unit until the absolute pressure does not rise above 500 microns (29.9 inches of mercury) within a 20-minute period after shutting off the vacuum pump and closing the manifold gauge valves.

F When the absolute pressure requirement above has been met, disconnect the manifold hose from the vacuum pump and connect it to an upright cylinder of HFC-410A refrigerant. Open the manifold gauge valve 1 to 2 psig in order to release the vacuum in the line set and indoor unit.

G Perform the following:

- Close manifold gauge valves.
- Shut off HFC-410A cylinder.
- Reinstall service valve cores by removing manifold hose from service valve. Quickly install cores with core tool while maintaining a positive system pressure.
- Replace stem caps and secure finger tight, then tighten an additional one-sixth (1/6) of a turn as illustrated.

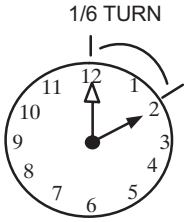

FIGURE 13. Evacuating the System

⚠ IMPORTANT

Use a thermocouple or thermistor electronic vacuum gauge that is calibrated in microns. Use an instrument capable of accurately measuring down to 50 microns.

⚠ WARNING

Possible equipment damage.

Avoid deep vacuum operation. Do not use compressors to evacuate a system. Extremely low vacuum can cause internal arcing and compressor failure. Damage caused by deep vacuum operation will void warranty.

Evacuating the system of non-condensables is critical for proper operation of the unit. Non-condensables are defined as any gas that will not condense under temperatures and pressures present during operation of an air conditioning system. Non-condensables and water suction combine with refrigerant to produce substances that corrode copper piping and compressor parts.

ELECTRICAL – Circuit Sizing and Wire Routing

In the U.S.A., wiring must conform with current local codes and the current National Electric Code (NEC). In Canada, wiring must conform with current local codes and the current Canadian Electrical Code (CEC).

Refer to the furnace or air handler installation instructions for additional wiring application diagrams and refer to unit nameplate for minimum circuit ampacity and maximum overcurrent protection size.

24VAC TRANSFORMER

Use the transformer provided with the furnace or air handler for low-voltage control power (24VAC - 40 VA minimum).

Thermostat Control and Low Voltage Wiring

S30 Communicating Thermostat Control

The SL28XCV variable capacity unit is installed as a fully communicating system consisting of S30 Smart Communicating Thermostat, a communicating indoor unit and the SL28XCV variable capacity outdoor unit wired with (4) communication wires (R, I+, I- and C) connected to the SL28XCV Outdoor Unitary Control.

The SL28XCV variable capacity fully communicating system will take full advantage of the advanced diagnostics and control, Wi-Fi accessibility and system operation parameters. Refer to the SL28XCV field wiring diagram for an S30 communicating thermostat.

⚠ WARNING

Electric Shock Hazard. Can cause injury or death. Unit must be properly grounded in accordance with national and local codes.

Line voltage is present at all components when unit is not in operation on units with single-pole contactors. Disconnect all remote electric power supplies before opening access panel. Unit may have multiple power supplies.

⚠ WARNING

Fire Hazard. Use of aluminum wire with this product may result in a fire, causing property damage, severe injury or death. Use copper wire only with this product.

⚠ WARNING

Failure to use properly sized wiring and circuit breaker may result in property damage. Size wiring and circuit breaker(s) per Product Specifications bulletin (EHB) and unit rating plate.

SL28XCV and S30 Communicating Thermostat Wiring Summary

Thermostat Type	Indoor Unit Type	Qty. of Wires to SL28XCV	SL28XCV Terminal Strip Connections	Unit Operation	Field Wiring Diagram
S30 Communicating Thermostat	Comunicating Gas Furnace or Air Handler	4	R, I+, I-, C	Fully Communicating Variable Capacity Operation Based Upon Thermostat Demand	Figure 18

SIZE CIRCUIT AND INSTALL DISCONNECT SWITCH

Refer to the unit nameplate for minimum circuit ampacity, and maximum fuse or circuit breaker size (HACR per NEC). Install power wiring and properly sized disconnect switch.

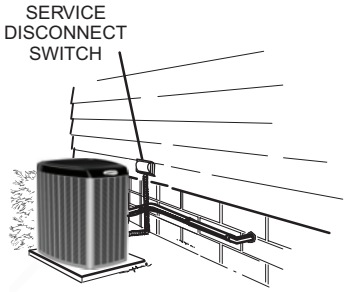

NOTE — Units are approved for use only with copper conductors. Ground unit at disconnect switch or connect to an earth ground.

INSTALL THERMOSTAT

Install room thermostat (ordered separately) on an inside wall in the center of the conditioned area and 5 feet (1.5m) from the floor. The thermostat should not be installed on an outside wall or where it can be affected by sunlight or drafts.

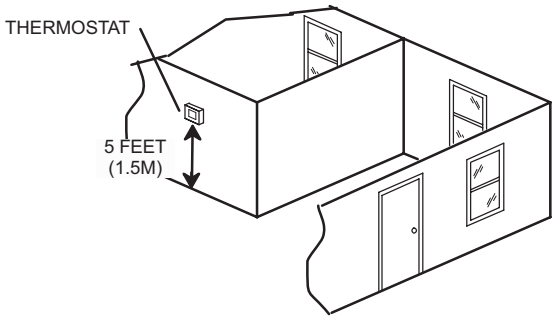

NOTE — 24VAC, Class II circuit connections are made in the control box.

Outdoor Control 7 Segment Display and Push Button

Information concerning the outdoor control 7-segment display and push button operations are available on the unit access panel.

Alarms

Alarm information is provided on the unit access panel.

Pump Down Jumper

To activate pump down mode, the control must be in the idle state, and the pump down jumper placed across the two pump down pins. To deactivate, remover jumper.

Unit Operation

SL28XCV Unit Operation with a S30 Communicating Thermostat

The SL28XCV air conditioner must be installed with a variable speed air handler or furnace and a S30 communicating thermostat. The unit capacity will be controlled in the variable capacity mode throughout the range of capacity from minimum capacity to maximum capacity based upon thermostat demand. The indoor air volume will be controlled to match cooling capacity throughout the capacity range.

TABLE 6

Outdoor Control Terminal Designations and Input /Outputs (see figure 15 for terminal locations)				
Designator	**Description**	**Input**	**Output**	**Common**
O	Unused on SL28XCV , for heat pump applications only	N/A	Switched 24VAC nominal	N/A
REV	Unused on SL28XCV , for heat pump applications only	N/A	N/A	24VAC common
LPS	Low pressure switch (not used on SL28XCV)	N/A	5ma @ 18VAC	N/A
LPS	Low pressure switch sensing connection (not used on SL28XCV)	5ma @ 18VAC	N/A	N/A
HPS	High pressure switch	N/A	24VAC nominal	N/A
HPS	High pressure switch sensing connection	24VAC nominal	N/A	N/A
TP	Top cap thermostat switch (in series with the HPS)	N/A	24VAC nominal	N/A
TP	Top cap thermostat switch sensing connection	24VAC nominal	N/A	N/A
Cntctr	Control (inverter power) contactor switched output (in series with the HPS and TC)	N/A	Switched 24VAC nominal	N/A
Cntctr	Contactor common	N/A		24VAC common
FPWM	PWM fan output	N/A	10-97% duty cycle, 19-23 VDC peak	
C	PWM fan common connection	N/A	N/A	Fan PWM common
P10 (PSC Fan 1/4" QC)	1/4" QC terminals - Switched output for PSC outdoor fan control	N/A	Switched 230VAC Nominal	N/A
RAST Connector Terminal Designations				
W	Unused on SL28XCV, for heat pump applications only	N/A	24VAC nominal	N/A
L	24VAC input to initiate load shed	24VAC nominal from load shed N.O. contacts (close to initiate load shed)	N/A	N/A
Y1	Emergency input	Emergency input	N/A	N/A
O	Unused on SL28XCV, for heat pump applications only	24VAC nominal from thermostat	N/A	N/A
C	24VAC nominal power return	N/A	N/A	24VAC common
I-	Low data line	Data	Data	N/A
I+	High data line	Data	Data	N/A
R	24VAC nominal power input	24VAC nominal board main power input	N/A	N/A
DF	OEM test	N/A	N/A	N/A
TST	OEM test pin	24VAC nominal	N/A	N/A

Table 6 continued

Outdoor Control Terminal Designations and Inputs / Outputs					
WARNING - Electric Shock Hazard. Can cause injury or death. Unit must be grounded in accordance with national and local codes. The 4 pins in P6 have the potential of transferring up to 250 volts to the unit cabinet ground.					
Designator		**Description**	**Input**	**Output**	**Common**
P6 - Pin 1	Tx	Transmit data to inverter, connects to Rx of inverter	Outdoor control communication transmit pin	– Pin 1 to pin 2 should read 4.5 to 5.55 VDC when not communicating – Pin 3 to pin 2 should read 4.5 to 5.55 VDC when not communicating – Pin 4 to pin 2 should read 4.5 to 5.5 VDC NOTE - Communication signals switch off and on rapidly. This may cause volt meter readings to fluctuate. This is normal. Communication signals will switch between this 5V and common (Pin 2).	
P6 - Pin2	Inverter Common	Inverter common NOTE – This is a signal reference point and not an earth ground.	Inverter common		
P6 - Pin 3	Rx	Receive data from the inverter Connects to Tx of inverter	Outdoor control communication receive pin		
P6 - Pin 4	Inv 5V	Inverter 5VDC volts	Inverter 5VDC volts		
LIQ / DIS		Discharge Line temperature sensor - not used (10K ohm resistor installed)	N/A	N/A	N/A
LIQ / DIS		Discharge Line temperature sensor - not used (10K ohm resistor installed)	N/A	N/A	N/A
AMB		Outdoor ambient temperature sensor supply	N/A	N/A	N/A
AMB		Outdoor ambient temperature sensor return	N/A	N/A	N/A
COIL		Outdoor coil temperature sensor - not used (10K ohm resistor installed)	N/A	N/A	N/A
COIL		Outdoor coil temperature sensor - not used (10K ohm resistor installed)	N/A	N/A	N/A
PUMP DOWN		To initiate pump down function, place jumper in the ON position. 1. Place the jumper in the ON position to activate pump down mode. 2. Place the jumper in the OFF position to deactivate pump down mode. NOTE - If the pump down jumper is in the ON position during power-up, it is ignored. NOTE - The outdoor control stays in pump down mode for five minutes, after which the outdoor control initiates a compressor shutdown sequence.	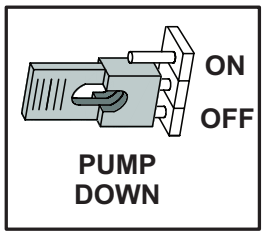 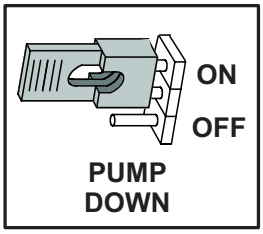		
Suction Pressure Out		Pressure transducer Supply Voltage Pin 1 of 3		5 VDC	
Suction Pressure In		Pressure transducer output voltage Pin 2 of 3	0-4.5 VDC		
Suction Pressure GND		Pressure transducer GND Pin 3 of 3			VDC Com
Liquid Pressure Out		Pressure transducer Supply Voltage Pin 1 of 3 - Not used on SL28XCV Air Conditioner		5 VDC	
Liquid Pressure In		Pressure transducer Supply Voltage Pin 2 of 3 - Not used on SL28XCV Air Conditioner	0-4.5 VDC		
Liquid Pressure GND		Pressure transducer GND Pin 3 of 3 - Not used on SL28XCV Air Conditioner			VDC Com
SUCT		Suction Line Temperature Sensor Supply - Pin 1 of 4		0-4.5 VDC	
SUCT		Suction Line Temperature Sensor Supply - Pin 2 of 4			
LIQ		Liquid Line Temperature Sensor Supply - Pin 3 of 4		0-4.5 VDC	
LIQ		Liquid Line Temperature Sensor Supply - Pin 4 of 4			

Servicing Units Delivered Void of Charge

If the outdoor unit is void of refrigerant, clean the system using the procedure described below.

1 - Leak test the system using the procedure outlined on page 22.

2 - Evacuate the system using procedure outlined on page 23.

3 - Use nitrogen to break the vacuum and install a new filter drier in the system.

4 - Evacuate the system again using procedure outlined on page 23.

5 - Weigh in refrigerant using procedure outlined in figure 56.

6 - Monitor the system to determine the amount of moisture remaining in the oil. It may be necessary to replace the filter drier several times to achieve the required dryness level. **If system dryness is not verified, the compressor will fail in the future**.

Unit Start-Up

⚠ IMPORTANT

If unit is equipped with a crankcase heater, it should be energized 24 hours before unit start-up to prevent compressor damage as a result of slugging.

1 - Rotate fan to check for binding.

2 - Inspect all factory- and field-installed wiring for loose connections.

3 - After evacuation is complete, open both the liquid and vapor line service valves to release the refrigerant charge contained in outdoor unit into the system.

4 - Replace the stem caps and tighten to the value listed in table 1.

5 - Check voltage supply at the disconnect switch. The voltage must be within the range listed on the unit's nameplate. If not, do not start the equipment until you have consulted with the power company and the voltage condition has been corrected.

6 - Set the thermostat for a cooling demand. Turn on power to the indoor unit and close the outdoor unit disconnect switch to start the unit.

7 - Recheck voltage while the unit is running. Power must be within range shown on the nameplate.

8 - Check system for sufficient refrigerant by using the procedures listed in the System Refrigerant section on page 75.

System Operation and Service

7-SEGMENT ALERT AND SYSTEM STATUS CODES

Alert codes are displayed using the 7-segment display located on the outdoor control.

NOTE - System fault and lockout codes take precedence over system status codes (cooling, heating operating percentages or defrost/dehumidification).

The 7-segment will display an abnormal condition (error code) when detected in the system. A list of the codes are shown in table 6.

Resetting Alert Codes

Alert codes can be reset manually or automatically:

1 - Manual Reset

Manual reset can be achieved by one of the following methods:

- Disconnecting R wire from the outdoor control R terminal.
- Turning the indoor unit off and back on again

After power up, all currently displayed codes are cleared.

2 - Automatic Reset

After an alert is detected, the outdoor control continues to monitor the unit's system and compressor operations. When/if conditions return to normal, the alert code is turned off automatically.

NOTE - Error codes can be recalled by following information shown in the table on page 37.

TABLE 7. Outdoor Control 7-Segment Display Alert Codes and Inverter LED Flash Codes

***NOTE** – System fault and lockout codes take precedence over system status codes (cooling, heating operating percentages or defrost/dehumidification). Only the latest active fault or lockout codes are displayed (if present). If no fault or lockout codes are active, then system status codes are displayed. Alert codes are also displayed on the S30 thermostat.*

Alert Codes	Inverter Code	Inverter LED Flash Code (number of flashes)		Priority	Alarm Description	Possible Causes and Clearing Alarm
		Red LED	Green LED			
N/A	N/A	ON	OFF	N/A	SL28XCV-024, -036 only: Indicates inverter is operating normally.	
N/A	N/A	ON	ON	N/A	SL28XCV-048, -060 only: Indicates inverter is operating normally.	
N/A	N/A	OFF	OFF	N/A	Indicates inverter is NOT energized.	
E105	N/A	N/A	N/A	Service Soon	The outdoor control has lost communication with either the thermostat or indoor unit.	Equipment is unable to communicate. Indicates numerous message errors. In most cases errors are related to electrical noise. Make sure high voltage power is separated from RSBus. Check for miswired and/or loose connections between the stat, indoor unit and outdoor unit. Check for a high voltage source of noise close to the system. Fault clears after communication is restored.
E120	N/A	N/A	N/A	Service Soon	There is a delay in the outdoor unit responding to the system.	Typically, this alarm/code does not cause any issues and clears on its own. The alarm/code is usually caused by a delay in the outdoor unit responding to the thermostat. Check all wiring connections. Cleared after unresponsive device responds to any inquiry.
E124	N/A	N/A	N/A	Service Urgent	The S30 thermostat has lost communication with the outdoor unit for more than 3 minutes.	Equipment lost communication with the thermostat. Check the wiring connections and resistance, then cycle the system power. This alarm stops all associated HVAC operations and waits for a signal from the non-communicating unit. The alarm / fault clears after communication is re-established.
E125	N/A	N/A	N/A	Service Urgent	There is a hardware problem with the outdoor control.	There is a control hardware problem. Replace the outdoor control if the problem prevents operation and is persistent. The alarm / fault is cleared 300 seconds after the fault recovers.
E131	N/A	N/A	N/A	Service Urgent	The outdoor unit control parameters are corrupted.	Reconfigure the system. Replace the control if heating or cooling is not available.
E132	N/A	N/A	N/A	Service Urgent	Internal software error.	Replace outdoor control.
E180	N/A	N/A	N/A	Service Urgent	The outdoor unit ambient temperature sensor has malfunctioned. As a result the outdoor unit control will not perform low ambient cooling.	Valid temperature reading is lost during normal operation and after outdoor control recognized sensors. Compare outdoor sensor resistance to temperature/ resistance charts in unit installation instructions. Replace sensor pack if necessary. At the beginning of (any) configuration, furnace or airhandler control detects the presence of the sensor(s). If detected (reading in range), appropriate feature is shown in the S30 thermostat About screen. The alarm / fault clears upon configuration, or when normal values are sensed.
E181	N/A	N/A	N/A	Service Soon	Suction pressure transducer fault.	Suction pressure transducer is out of range. The signal should be between 0.5 VDC and 4.5 VDC between blue and black. The error code will be cleared when proper signal is provided.
E182	N/A	N/A	N/A	Service Soon	Suction temperature sensor has malfunctioned.	Check temperature sensor in the applicable installation and service procedure. Nominal resistance is 10K Ohms at 77F.
E345	N/A	N/A	N/A	Service Urgent	Heat Pump or Air Conditioner Alert Code - The "O" relay on the outdoor board has failed.	Either the pilot relay contacts did not close, the relay coil did not energize the circuit that confirms this operational sequence is not sensing properly.
E409	N/A	N/A	N/A	Service Soon	Outdoor control secondary voltage is 18VAC or less.	Secondary voltage is below 18VAC. After 10 minutes, operation is discontinued. Check the indoor line voltage and transformer output voltage. The alarm clears after the voltage is higher than 20VAC for 2 seconds or after a power reset.
E410	N/A	N/A	N/A	Service Soon	The outdoor unit cycled off due to low suction pressure.	Unit pressure is below the lower limit. The system is shut down. The cut-out is set at 25 PSIG and the cut-in set at 40 PSIG. Confirm that the system is properly charged with refrigerant. Check TXV, indoor unit blower motor, dirty filters or clogged refrigerant filter. Confirm that the evaporator coil is clean. The alarm clears after the pressure rises above 40 PSIG.
E411	N/A	N/A	N/A	Service Urgent	The low pressure fault has occurred 5 times within one hour. As a result, the outdoor unit is locked out.	Low pressure fault error count reached 5 strikes. The low pressure cut-out is at 25PSIG and resets at 40PSIG. Confirm that the system is properly charged with refrigerant. Check for clogged TXV, blockage to indoor unit blower motor, dirty filters or clogged refrigerant filter. Confirm that the evaporator coil is clean. The alarm clears after a power reset.

TABLE 7. Outdoor Control 7-Segment Display Alert Codes and Inverter LED Flash Codes

***NOTE** – System fault and lockout codes take precedence over system status codes (cooling, heating operating percentages or defrost/dehumidification). Only the latest active fault or lockout codes are displayed (if present). If no fault or lockout codes are active, then system status codes are displayed. Alert codes are also displayed on the S30 thermostat.*

Alert Codes	Inverter Code	Inverter LED Flash Code (number of flashes)		Priority	Alarm Description	Possible Causes and Clearing Alarm
		Red LED	Green LED			
E412	N/A	N/A	N/A	Service Soon	The outdoor unit high pressure switch has opened.	Unit pressure is above the upper limit. System is shut down. The high pressure switch opens at 590PSIG and closes at 418PSIG. Confirm that the system is properly charged with refrigerant. Check for clogged TXV, blockage to indoor unit blower motor, clogged refrigerant filter. Confirm that the outdoor unit is clean. The alarm clears after the pressure switch closes or a power reset. For heating, indoor CFM may be set too low. For zoning system, zone CFM may be set too low.
E413	N/A	N/A	N/A	Service Urgent	The high pressure switch has opened 5 times within one hour. As a result, the outdoor unit is locked out.	Open high pressure switch error count reached 5 strikes. System is shut down. The high pressure switch for HFC410A opens at 590PSIG and closes at 418PSIG. Confirm that the system is properly charged with refrigerant. Check condenser fan motor, for clogged TXV, for blockage to indoor unit blower motor, for stuck reversing valve or clogged refrigerant filter. Confirm that the outdoor unit is clean. The alarm clears after a power reset. For heating, indoor CFM may be set too low. For zoning system, zone CFM may be set too low.
E416	N/A	N/A	N/A	Service Soon / Service Urgent	The outdoor coil sensor has malfunctioned.	SL28XCV has a fixed 10K ohm resistor installed on the harness connector between pins 5 & 6. Check connections on pins 5 & 6 and check for resistance of 10K ohms. Error code will occur on open or shorted circuit
E422	N/A	N/A	N/A	Service Soon	Compressor top cap switch exceeding thermal limit.	The top of the compressor is hot. Refrigerant charge may be low, or low mass flow of refrigerant. Check TXV, clogged filter drier, condenser fan motor, indoor blower motor, confirm indoor coil is clean.
E423	40	4 flashes	OFF	Service Soon / Service Urgent	The inverter has detected a circuit problem.	Control locks out after 10 strikes within an hour. To clear, disconnect power to the indoor unit (24VAC power source to the outdoor control) which will power off the outdoor control and will open the outdoor unit contactor, which interrupts power to the inverter and then re-apply power.
E424	N/A	N/A	N/A	Service Soon	The liquid line temperature sensor has malfunctioned.	Check connections between pin 3 and 4 of the four pin liquid/suction temperature plug on the bottom left corner of the control. Check resistance of resistor. Nominal 10K Ohms at 77F. Error code occurs if sensor is open or shorted.
E425	N/A	N/A	N/A	Dealer Information Only	Outdoor control has increased minimum compressor speed to allow for proper oil return due to low ambient temperature. NOTE - Minimum speed adjustments begin at 45°F and increase to 100% minimum at 17°F.	Outdoor ambient temperature is below system limit. Control attempts to run at lowest allowed compressor speed to allow for proper oil return. Automatically clears when outdoor ambient temperature rises above limit for more than 5 minutes.
E426	N/A	N/A	N/A	Service Urgent	Excessive inverter alarms	After ten faults within one hour, control is locked out, indicating poor system operation. Review history of alarms to resolve system setup. Check condenser fan motor, TXV, indoor unit blower motor, over-charge, undercharge, or clogged refrigerant filter. To clear, disconnect power to the indoor unit (24VAC power source to the outdoor control) which will power off the outdoor control and will open the outdoor unit contactor, which interrupts power to the inverter and then re-apply power. Inverter alarms 12 to 14 and 53 do not count toward this lock out condition.
E427	21	2 flashes	1 flash	Service Soon / Service Urgent	The inverter has detected a DC peak fault condition. If condition (55A or higher) is detected, outdoor unit compressor and fan stop. Anti-short cycle is initiated. If peak current (55A or higher) occurs 10 times within an hour, system is locked out. Indicates high pressure, condenser fan failure, locked compressor rotor or overcharge. To clear, disconnect power to the indoor unit (24VAC power source to the outdoor control) which will power off the outdoor control and will open the outdoor unit contactor, which interrupts power to the inverter and then re-apply power..	
E428	22	2 flashes	2 flashes	Service Soon / Service Urgent	The inverter has detected a high main input current condition.	If condition is detected, is detected, outdoor unit compressor and fan stop. Antishort cycle is initiated. If condition occurs 5 times within an hour, system is locked out. Indicates high pressure, condenser fan failure or overcharge. To clear, disconnect power to the indoor unit (24VAC power source to the outdoor control) which will power off the outdoor control and will open the outdoor unit contactor, which interrupts power to the inverter and then re-apply power.

TABLE 7. Outdoor Control 7-Segment Display Alert Codes and Inverter LED Flash Codes

***NOTE** – System fault and lockout codes take precedence over system status codes (cooling, heating operating percentages or defrost/dehumidification). Only the latest active fault or lockout codes are displayed (if present). If no fault or lockout codes are active, then system status codes are displayed. Alert codes are also displayed on the S30 thermostat.*

Alert Codes	Inverter Code	Inverter LED Flash Code (number of flashes)		Priority	Alarm Description	Possible Causes and Clearing Alarm
		Red LED	Green LED			
E429	23	2 flashes	3 flashes	Service Soon / Service Urgent	On a call for compressor operation, if DC link power in inverter does not rise above 180 VDC for 2 and 3 ton models, 250 VDC for 4 and 5 ton models, within 30 seconds, the control will display a moderate code. If condition is detected, outdoor unit will stop (Compressor and fan). Antishort cycles is initiated. If condition occurs 10 times within a 60 minute rolling time period, system will lock out and display a critical code.	**Issues**: (1) If DC link power in inverter does not rise above 180 VDC for 2- and 3-ton models, 250 VDC for 4- and 5-ton models, within 30 seconds, the outdoor control will display a moderate code. (2) Capacitors on inverter do not properly charge. **Corrective Actions:** (1) Check for proper main power to outdoor unit and for any loose electrical connections.
E430	26	2 flashes	6 flashes	Service Soon / Service Urgent	Compressor start failure	If condition is detected, outdoor unit compressor and fan stop. Antishort cycle is initiated. If condition occurs 10 times within an hour, system is locked out. Indicates poor connection at compressor harness, improper winding resistance, locked compressor rotor, or flooded compressor. To clear, disconnect power to the indoor unit (24VAC power source to the outdoor control) which will power off the outdoor control and will open the outdoor unit contactor, which interrupts power to the inverter and then re-apply power.
E431	27	2 flashes	7 flashes	Service Soon / Service Urgent	Error occurs when PFC detects an over-current condition of 100A, the control will display a moderate code. If condition is detected, outdoor unit will stop (Compressor and fan). Anti-short cycle is initiated. Inverter is unavailable to communicate with the outdoor control for 3 minutes. If condition occurs 10 times within a 60 minute rolling time period, system will lock out and display a critical code.	**Issues:** (1) Indicates power interruption, brownout, poor electrical connection or loose inverter input wire. (2) System testing was set up and code was generated when the reversing valve is de-energized coming out of defrost (code appears with or without 30 compressor delay). **Corrective Actions:** (1) Check for proper main power to outdoor unit and for any loose electrical connections. (2) To clear, disconnect power to the indoor unit (24VAC power source to the outdoor control) which will power off the outdoor control and will open the outdoor unit contactor, which interrupts power to the inverter and then re-apply power.
E432	28	2 flashes	8 flashes	Service Soon / Service Urgent	The inverter has detected a DC link high voltage condition	Error occurs when the DC link capacitor voltage is greater than 480VDC. If condition is detected, outdoor unit compressor and fan stop. Anti-short cycle is initiated. If condition occurs 10 times within an hour, system is locked out. System stops. To clear, disconnect power to the indoor unit (24VAC power source to the outdoor control) which will power off the outdoor control and will open the outdoor unit contactor, which interrupts power to the inverter and then re-apply power.
E433	29	2 flashes	9 flashes	Service Soon / Service Urgent	The inverter has detected a compressor over-current condition.	Error occurs when compressor peak phase current is greater than 28A. Inverter issues code 14 first and slows down to try to reduce the current. If the current remains high, outdoor unit compressor and fan stop. Anti-short cycle is initiated. If condition occurs five times within an hour, system is locked out. To clear, disconnect power to the indoor unit (24VAC power source to the outdoor control) which will power off the outdoor control and will open the outdoor unit contactor, which interrupts power to the inverter and then re-apply power.

TABLE 7. Outdoor Control 7-Segment Display Alert Codes and Inverter LED Flash Codes

***NOTE** – System fault and lockout codes take precedence over system status codes (cooling, heating operating percentages or defrost/dehumidification). Only the latest active fault or lockout codes are displayed (if present). If no fault or lockout codes are active, then system status codes are displayed. Alert codes are also displayed on the S30 thermostat.*

Alert Codes	Inverter Code	Inverter LED Flash Code (number of flashes)		Priority	Alarm Description	Possible Causes and Clearing Alarm
		Red LED	Green LED			
E434	53	5 flashes	3 flashes	Service Soon / Service Urgent	Outdoor control has lost communications with the inverter for greater than 3 minutes. Outdoor unit will stop all compressor demand. Outdoor control will attempt to establish communication multiple times and will automatically clear when the error clears. Unit will lock out after 60 minutes if communication is not established and will display a critical error code.	**Issues**: (1) Outdoor disconnect is off or outdoor power is off, when indoor power is on (source for 24VAC) (2) Loose electrical power connections (3) interruption of main power to the inverter (4) Generator powers indoor unit, but not the outdoor unit. **Corrective Actions:** (1) To reset, cycle the indoor power off (source of 24VAC to outdoor unit) and back on. This will de-energize outdoor control and inverter by cycling the contactor. (2) Make sure the disconnect is on (3) check electrical power supply connections (4) Check for proper main 230V power supply
E435	60	6 flashes	OFF	Service Soon / Service Urgent	Inverter internal error	When this error occurs, the outdoor control cycles power to the inverter by opening the contactor for two minutes. Check that the EEPROM is properly seated. After power is cycled to the inverter 3 times, the outdoor unit is locked out. If problem persists, replace the inverter.
E436	62	6 flashes	2 flashes	Service Soon / Service Urgent	Inverter heat sink temperature exceeded limit. Occurs when the heat sink temperature exceeds the inverter limit. Inverter issues code 13 first, then slows down to allow the heat sink to cool. If temperature remains high, outdoor unit stops (compressor and fan). Anti-short cycle is initiated. If condition occurs 5 times within an hour, system is locked out. To clear, disconnect power to the indoor unit (24VAC power source to the outdoor control) which will power off the outdoor control and will open the outdoor unit contactor, which interrupts power to the inverter and then re-apply power.	**Issue**: This error may occur if the outdoor fan fails to operate or the inverter heat sink is obstructed with debris. Feedback from supplier tear down of inverter indicates that the screws that hold the inverter to the inverter board were loose causing poor contact between these two components. **Corrective Action**: Tighten screws that hold the heat sink to the inverter control board. **NOTE**: Wait five minutes to allow capacitor to discharge before checking screws.
E437	65	6 flashes	5 flashes	Service Soon / Service Urgent	Heat sink temperature sensor fault has occurred (temperature less than 4ºF or greater than 264ºF after 10 minutes of operation).	Occurs when the temperature sensor detects a temperature less than 0.4ºF or greater than 264ºF after 10 minutes of operation. If condition is detected, outdoor unit will stop (compressor and fan). Anti-short cycle is initiated. If condition occurs 5 times within an hour, system will lock out. To clear, disconnect power to the indoor unit (24VAC power source to the outdoor control) which will power off the outdoor control and will open the outdoor unit contactor, which interrupts power to the inverter and then re-apply power. If problem persists, replace inverter.
E438	73	7 flashes	3 flashes	Service Soon / Service Urgent	The inverter has detected a PFC over current condition. This would be caused by a high load condition, high pressure, or outdoor fan failure. Outdoor control will display the code when the inverter has the error. After 3 minutes, the inverter will reset and the compressor will turn on again. If it happens 10 times within a 60 minute rolling time period, the OD control will lock out operation of the outdoor unit and display a critical code.	**Issue**: Possible issue is system running at high pressures. Check for high pressure trips or other alert codes in room thermostat and outdoor control. To clear, disconnect power to the indoor unit (24VAC power source to the outdoor control) which will power off the outdoor control and will open the outdoor unit contactor, which interrupts power to the inverter and then re-apply power.
E439	12	1 flash	2 flashes	Dealer Information Only	Compressor slowdown due to high input current.	This error code is primarily for informational purposes as the inverter controls the compressor to operate within design parameters. Typically the inverter will make a minor speed reduction of 4 Hz (approximately a 5-6% speed reduction) for a brief period of time and to reduce the input current and will then resume normal operation.

TABLE 7. Outdoor Control 7-Segment Display Alert Codes and Inverter LED Flash Codes

***NOTE** – System fault and lockout codes take precedence over system status codes (cooling, heating operating percentages or defrost/dehumidification). Only the latest active fault or lockout codes are displayed (if present). If no fault or lockout codes are active, then system status codes are displayed. Alert codes are also displayed on the S30 thermostat.*

Alert Codes	Inverter Code	Inverter LED Flash Code (number of flashes)		Priority	Alarm Description	Possible Causes and Clearing Alarm
		Red LED	Green LED			
E440	13	1 flash	3 flashes	Dealer Information Only	Heat sink temperature is approaching limit. The compressor speed automatically slows to reduce heat sink temperature. The control sets indoor CFM and outdoor RPM to values according to demand percentage rather than the actual Hz. Alarm is automatically cleared.	This error code is primarily for informational purposes as the inverter controls the compressor speed to operate within design parameters. Typically the inverter will make a minor speed reduction of 4 Hz (approximately a 5-6% speed reduction) for a brief period of time and to reduce the heat sink temperature and will then resume normal operation. This may occur at high outdoor temperatures (above 110ºF) for brief periods of time (3 – 4 minutes) and is normal and expected operation of the inverter controlling the compressor safely within design parameters. The inverter finned aluminum heat sink is located on the back side of the inverter in the condenser air stream. f the alert code 440 occur frequently, especially at lower outdoor temperatures, check the heat sink for debris that may reduce heat transfer or possible obstructions that may impact air flow across the heat sink. The inverter will begin to briefly reduce the compressor speed when the heat sink temperature rises above 185ºF and will allow the inverter to resume the requested compressor demand speed once the inverter heat sink reaches 176ºF. The heat sink temperature, compressor speed in Hertz and the Inverter Compressor Speed Reduction status (“On” or “Off ”) notification can be viewed under the outdoor unit Diagnostics section of the thermostat dealer control center on units installed with an S30 thermostat.
E441	14	1 flash	4 flashes	Dealer Information Only	Compressor slowdown due to high compressor current. Compressor current is approaching limit. The compressor speed automatically slows. The control sets indoor CFM and outdoor RPM to values according to demand percentage rather than the actual Hz. Alarm is automatically cleared.	This error code is primarily for informational purposes as the inverter controls the compressor to operate within design parameters. Alert code 441 typically occurs at startup as the compressor as the currently increases rapidly during startup. The inverter will reduce the compressor speed by 4 hz and slow the compressor ramp up speed to the requested compressor demand (capacity). This is normal and expected operation of the inverter to control the compressor within design parameters. In most cases the alert code 441 does not require any additional service or diagnostic procedures. E441 may also occur if the system is operating at high pressures.
E442	N/A	N/A	N/A	Service Urgent	The top cap switch has opened five times within one hour. As a result, the outdoor unit is locked out.	When compressor thermal protection sensor opens five times within one hour, outdoor stops working. To clear, disconnect power to the indoor unit (24VAC power source to the outdoor control) which will power off the outdoor control and will open the outdoor unit contactor, which interrupts power to the inverter and then re-apply power.
E443	N/A	N/A	N/A	Service Urgent	Incorrect appliance unit size code selected.	Check for proper configuring of unit size codes for outdoor unit in configuration guide or in installation instructions. If replacing inverter, verify inverter model matches unit size. The alarm/ fault clears after the correct match is detected following a reset. Remove the thermostat from the system while applying power and reprogramming.
E600	N/A	N/A	N/A	Dealer Information Only	Compressor has been cycled OFF on utility load shedding.	Load shedding function: Provides a method for a local utility company to limit the maximum power level usage of the outdoor unit. The feature is activated by applying 24 volts AC power to the L and C terminals on the outdoor control.
E601	N/A	N/A	N/A	Dealer Information Only	Outdoor unit has been cycled OFF on low temperature protection.	Low temperature protection: Outdoor unit will not operate when the outdoor temperature is at or below -4°F (-20°C). If the unit is operating and the outdoor temperature drops below -4°F (-20°C), the unit continues to operate until the room thermostat is satisfied or the outdoor temperature drops to -15°F (-26°C). Outdoor unit ambient sensor provides temperature readings.

POWER-UP / RESET:

FIRMWARE VERSION: During initial power-up or reset, the first item displayed is the outdoor control firmware version. Example to the right shows firmware version 2.3.

UNIT TYPE: The next item displayed is the self discovery unit type. AC = air conditioner and HP = heat pump. If the unit type cannot be determined, three bars appear.

UNIT NOMINAL CAPACITY: The next item to be displayed is the self-discovery unit nominal capacity. Valid capacities are 24 for 2-ton, 36 for 3-ton, 48 for 4-ton and 60 for 5-ton units. If the unit type cannot be determined, three bars appear.

UNIT CODE: The next item to be displayed is the self discovery unit code. (may be a single character or two characters). If the unit code cannot be determined, three bars appear.

UNIT CODE	UNIT TYPE, SIZE AND MODEL	
≡	NOT PROGRAMMED	
52	2-TON AC	SL28XCV-024
54	3-TON AC	SL28XCV-036
56	4-TON AC	SL28XCV-048
57	5-TON AC	SL28XCV-060

7-SEGMENT POWER-UP DISPLAY STRING

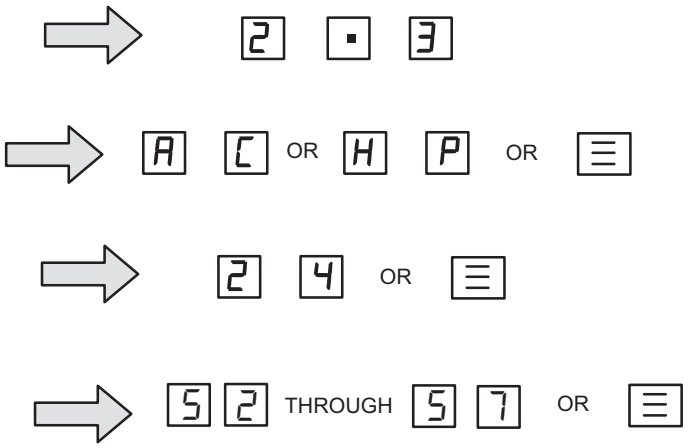

(These are just examples of firmware version, unit type, unit nominal capacity and unit codes.)

7-SEGMENT POWER-UP DISPLAY STRING EXAMPLE

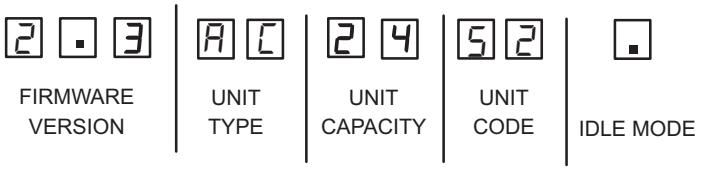

FIGURE 14. Outdoor Control 7-Segment Unit Status Displays

TABLE 8. Outdoor Control 7-Segment Unit Status Displays

Description	Example of Display
Idle Mode: Decimal point flashes at 1 Hz.	**Idle Mode**: Decimal point flashes at 1 Hz (0.5 second on, 0.5 second off). Display OFF.
Soft Disable Mode: Top and bottom horizontal line and decimal point flash at 1 Hz. If indoor or outdoor control displays Soft Disable code: 1) Confirm proper wiring between all devices (thermostat, indoor and outdoor). 2) Cycle power to the control that is displaying the Soft Disable code. 3) Put the room thermostat through Setup. 4) Go to Setup/System Devices/Thermostat/Edit/push Reset. 5) Go to Setup/System Devices/Thermostat/Edit/push Reset All. If the room thermostat detects a new device or a device that is not communicating, it sends a Soft Disable. When this occurs, Alarm 10 is activated and the room thermostat sends a Soft Disable command to the offending device on the bus (outdoor control, IFC, AHC, EIM or Damper Control Module).	**Soft Disable Mode**: Top and bottom horizontal line and decimal point flash at 1 Hz (0.5 second on, 0.5 second off). The control in Soft Disable Mode is indicated by the following: • On AHC, IFC and outdoor controls, Soft Disable Mode is indicated by flashing double horizontal lines on the 7-segment display. • On the Damper Control Module and EIM, the green LED will blink 3 seconds on and 1 second off.
O.E.M. Test Mode	All segments flashing at 2 Hz (unless error is detected). NOTE - Control should be replaced.
Anti-Short-Cycle Delay	The middle line flashes at 1 Hz for 2 seconds, followed by a 2-second display of the number of minutes left on the timer (value is rounded up: 2 min. 1 sec. is displayed as 3). If activated, the anti-short cycle delay time remaining is displayed (default is 300 sec./5 min.).
Cooling Capacity: Shows current cooling capacity demand percentage of maximum capacity. Example to the right indicates a cooling demand of 50 percent.	Cooling compressor demand percentage (1second on, 0.5 second off) followed by ambient temperature. S30 communicating thermostat with 50% demand and ambinet of 95F: C 5 0 pause A 9 5 Repeat C 5 0 pause A 9 5
Diagnostic recall: Shows the last 10 stored diagnostic error codes.	If first error is E 2 5 0, second E 2 3 1 pause E 2 5 0 pause E 2 3 1 Next codes (up to 10) are shown using same method.
Fault memory clears	If there are no error codes stored: E pause 0 0 0. After the fault memory is cleared, the following string flashes every 0.5 seconds: 0 0 0 0 pause
Active error in outdoor control Idle mode: Show all active error(s) codes.	Following display string is repeated if Error E 125 and E 201 are present: E 1 2 5 pause E 2 0 1
Active error in run mode: Show current status and all active error(s) codes.	Following display string is repeated if Error E 440 is present while cooling demand is 80 percent: C 8 0 pause E 4 4 0
Outdoor Ambient Temperature (OAT): Any time OAT is within operating range, value is displayed if unit is in diagnostic and non-diagnostic modes.	Following display string is repeated if cooling is active and OAT is 104°F: C 3 5 pause A 1 0 4 pause
Liquid Line Temperature (LIQ): Any time LIQ is sensed in operating range, value is displayed if unit is in diagnostic mode or manually enabled for non-diagnostic modes.	Following display string is repeated if cooling is active and LIQ is 105°F: C 3 1 pause L 1 0 5 pause
Pump Down Mode: While the unit is in pump down mode, P d is displayed repeatedly. Errors are shown if they exist.	The following display string is repeated: P d pause P d P d pause E 4 4 0 pause P d pause E 4 4 0

Idle mode – System is energized with no demand – Decimal flashes at 1 Hertz > 0.5 second ON. 0.5 second OFF		
Display Symbol or Character	**Display**	**Fan Test and Display String Option**
Displayed during start-up or power recycling	Display string shows outdoor control firmware version 1 _ 6 > pause > A C or H P unit > pause > unit capacity in BTUs > pause > unit code. If 3 horizontal bars are displayed during any sequence of this display string, it indicates that the specific parameter is not configured.	
.	Idle mode — decimal flashes at 1 Hertz > 0.5 second ON, 0.5 second OFF	
C or H	Indicates either cooling (C) or heating (H) mode compressor demand percentage, i.e. C 9 0	
F	Indicates control is in the outdoor fan test mode	**Control must be in Idle mode**: To enter fan test option - F mode, push and hold button until solid – appears, release button. Display begins flashing. Within 10 seconds, push and hold button until required symbol F displays, release button. Display begins flashing. Within 10 seconds, push and hold button until display stops flashing, release button. Control will initiate outdoor fan operation. Outdoor fan cycles ON for 10 minutes at the highest speed. To exit test – Push and hold button until three horizontal bars display. Release button, outdoor fan cycles **OFF**.

A	A in the display string represents the ambient temperature in °F at the sensor on the outdoor unit.	**Control can be in Idle or demand mode**: To enter display configuration option - A mode, push and hold button until solid – appears, release button. Display begins flashing. Within 10 seconds, push and hold button until required symbol A displays, release button. Display begins flashing. Within 10 seconds, push and hold button until display stops flashing, release button. Display shows error (E) code(s) and ambient (A), outdoor coil (c) and liquid (L) temperatures in Fahrenheit. ***NOTE** - If button is not pushed in the 10-second time period, the control exits the test mode. If this occurs, test mode must be repeated.*

Error Code Recall Mode (NOTE – control must be in idle mode)	
E	To enter error code recall mode, push and hold button until solid E appears, then release button. Control displays up to 10 error codes stored in memory. If E 0 0 0 0 is displayed, there are no stored error codes.
≡	To exit error code recall mode, push and hold button until solid three horizontal bars appear, then release button. Note - Error codes are not cleared.
c	To clear error codes stored in memory, continue to hold button while the 3 horizontal bars are displayed. Release button when solid c is displayed.
c	Push and hold for one (1) second, release button. 7-Segment displays 0 0 0 0 and exits error recall mode.

FIELD TEST MODE OPERATION

The field test mode allows the unit to be put into diagnostic mode and allows the installer to perform multiple tests on the control / unit.

Diagnostic Mode

Diagnostic mode is only available when the system is idle or during an active / suspended call for heating or cooling. Diagnostic mode is terminated when the exit command is given, the button is pressed and released without entering the diagnostic menu or 10 minutes has passed, whichever comes first.

When this mode is selected all installed temperature sensor valves (non-open and non-short) are shown on the 7-segment display. The following system status codes are displayed:

- Cooling
- Cooling stage or cooling percentage demand operation
- Active error codes

Outdoor Fan Mode

Diagnostic mode is only available while the system is in idle mode. This mode can be exited with the proper command or after 10 minutes has passed.

In diagnostic mode, the control energizes the outdoor fan at the highest speed.

TABLE 9. Field Test, Diagnostic Recall and Program Menu Options

Display	Display and action (normal operation)
No Change - idle (*)	**No Change - idle (*)**
Solid .	Enter or exit field test and program mode.
Solid A	Puts unit in diagnostic mode. (Displays ambient temperatures and any active error codes.)
Solid c	Clears error history (**)
Solid E	Enter diagnostic recall mode. Displays up to 10 error codes in memory.
Solid F	Starts outdoor fan.
String P U	Enter unit code programming.

*No change indicates the display will continue to show whatever is currently being displayed for normal operations.

**Note once the error history is deleted it cannot be recovered. After the history is deleted, the unit will reset itself.

Display	Display and action (normal operation)
.	Idle mode — decimal flashes at 1 Hertz > 0.5 second ON, 0.5 second OFF
C or F	Indicates either cooling (C) or heating (H) mode and demand percentage. Shows capacity percentage and outdoor ambient temperature. Example: C 5 0 pause A 7 5
E	E in the display string represents the active error code(s) in the outdoor unit. Example: C 5 0 pause E 4 4 pause E 4 4 2 pause A 7 5 pause
A	A in the display string represents the outdoor ambient temperature in °F at the outdoor sensor on the outdoor unit. Example: C 5 0 pause A 7 5

TYPICAL 7-SEGMENT ACTIVE COOLING DEMAND DISPLAY STRING

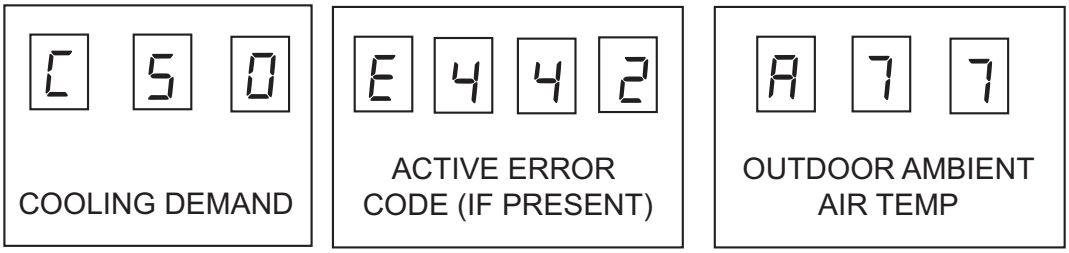

BY DEFAULT, COOLING DEMAND, ACTIVE ERROR CODES AND OUTDOOR AMBIENT TEMPERATURE ARE DISPLAYED.

FIGURE 15. Typical 7-Segment Demand Display String

Configuring Unit

When installing a replacement outdoor control, the unit selection code may have to be manually assigned using the 7-segment display and push button on the control. The unit code sets unit type, capacity and outdoor fan profile.

Configuring Unit Selection Code

Power-up - Unit selection code (two-digit number) displayed represents unit size code (outdoor unit capacity).
During initial power-up, firmware version, unit type, unit capacity and unit selection code will appear on the 7-segment display.

If three horizontal bars are shown in the 7-segment display during power-up, the outdoor control did not store the last configuration setting. If this happens, the configuration sequence for that setting must be repeated.

Outdoor control is in **IDLE** mode (No heating or cooling demand)

Yes

No

Turn room thermostat to **OFF**

To enter **unit selection mode**, push and hold the button next to the 7-segment display until **dash** symbol appears and immediately release button. Once dash starts flashing, proceed to next step.

Push and hold button until the solid PU sequence is displayed on the 7-segment display then immediately release the button. This configuration sequence allows the installer to select unit selection code (number combination) that matches the outdoor unit type and inverter.

UNIT SELECTION CODE

Press and hold the button during the PU cycling display.

NOTE - Either the PU sequence will repeat 5 times and if a selection is not made the control will return to idle mode.

NOT SELECTED

SELECTED

1. When the correct unit section code is displayed, release button immediately. [Display flashes.]
2. Push and hold button until selection stops flashing during one of the three cycles. [Release push button]
3. If selection is not made during those three cycles the control returns to idle mode.

UNIT SELECTION CODES	UNIT	
52	2-TON AC	SL28XCV-024
54	3-TON AC	SL28XCV-036
56	4-TON AC	SL28XCV-048
57	5-TON AC	SL28XCV-060

NOT SELECTED

SELECTED

The outdoor control stores the unit type, automatically exits the configuration mode and resets.

If three horizontal bars display in any part of the 7-segment display string during power-up, the outdoor control did not store the unit selection code. If this occurs, the configuration sequence for that section of the display string must be repeated.

EXAMPLE 7-SEGMENT DISPLAY STRING

2 . 3 — FIRMWARE VERSION

A C — UNIT TYPE

2 4 — UNIT CAPACITY

5 2 — UNIT CODE

. — IDLE MODE (NO DEMAND)

FIGURE 16. Configuring Unit Selection Code

Reconfiguring Outdoor Control using S30 Thermostat

If any component of the HVAC system is changed, e.g. replacing an outdoor sensor, reconfiguring the system is required. To begin reconfiguring a system, enter Dealer Control Center, select Equipment, select Reset, select Reconfigure System.

System Overview

Refer to the applicable Thermostat Installer Setup Guide for configuration procedures.

The outdoor control provides the following functions:

- Internal switching of outputs.
- Compressor anti-short-cycle delay (adjustable through the thermostat interface).
- Five-strike lockout function.
- High Pressure protection using the High Pressure Switch (S4) and Low Pressure Pressure protection using the Suction Pressure Transducer with setpoints that emulates a low pressure switch. (Cut-out of 40 psig and cut-in of 90 psig).
- Ambient (RT13), liquid line (RT36) and suction line (RT41) temperatures for monitoring and protection.

COMPRESSOR PROTECTION – FIVE-STRIKE LOCKOUT

The five-strike lockout function is designed to protect the compressor from damage. The five-strike feature is used for both high (S4) and low (S87) pressure switches.

Resetting Five-Strike Lockout

Once the condition has been rectified, power to the outdoor control R terminal must be cycled OFF.

Diagnostic Information

The following diagnostic information is available through the thermostat's user interface. Refer to the applicable Installer System Setup Guide.

- Compressor anti-short-cycle delay timer status
- Cooling compressor demand rate
- Compressor shift delay timer status
- High pressure switch status
- Suction pressure
- Compressor top cap switch status
- Liquid line and suction line temperature
- Superheat and subcooling values
- Outdoor ambient temperature
- Compressor active alarm
- Compressor Hz
- Inverter compressor short cycle
- Heat sink temperature

Installer Test – Using the S30 Thermostat or Lennox Dealer Setup App

Verify the proper operation of the system by running the Installer Test feature through the thermostat interface. Refer to the applicable Installer System Setup Guide.

COMPRESSOR SHORT CYCLING DELAY

The outdoor control protects the compressor from:

- Short cycling (five minutes) during initial power-up.
- Interruption in power to the unit.
- Pressure or sensor trips.
- Delay after demand is removed.

The delay is set by default for 300 seconds (five minutes) but can be changed through the thermostat interface.

Available settings are 60, 120, 180, 240 and 300 seconds.

CRANKCASE HEATER (HR1)

Compressors in all units are equipped with a 40-watt bellyband- type crankcase heater. HR1 prevents liquid from accumulating in the compressor. HR1 is controlled by the crankcase heater thermostat.

CRANKCASE HEATER THERMOSTAT (S40)

Thermostat S40 controls the crankcase heater in all units. S40 is located on the liquid line. When liquid line temperature drops below 50°F, thermostat S40 closes, energizing HR1. The thermostat opens, de-energizing HR1, once liquid line temperature reaches 70°F.

Maintenance

Outdoor Unit

Maintenance and service must be performed by a qualified installer or service agency. At the beginning of each cooling season, the system should be checked as follows:

1 - Clean and inspect outdoor coil (may be flushed with a water hose). Ensure power is off before cleaning.

2 - Outdoor unit fan motor is factory-lubricated and sealed. No further lubrication is needed.

3 - Visually inspect all connecting lines, joints and coils for evidence of oil leaks.

4 - Check all wiring for loose connections.

5 - Check for correct voltage at unit (unit operating).

6 - Check amp draw on outdoor fan motor.

7 - Inspect drain holes in coil compartment base and clean if necessary.

NOTE *- If insufficient heating or cooling occurs, the unit should be gauged and refrigerant charge should be checked.*

Outdoor Coil

It may be necessary to flush the outdoor coil more frequently if it is exposed to substances which are corrosive or which block airflow across the coil (e.g., pet urine, cottonwood seeds, fertilizers, fluids that may contain high levels of corrosive chemicals such as salts).

- Outdoor Coil — The outdoor coil may be flushed with a water hose.
- Outdoor Coil (Coastal Area) — Moist air in ocean locations can carry salt, which is corrosive to most metal. Units that are located near the ocean require frequent inspections and maintenance. These inspections will determine the necessary need to wash the unit including the outdoor coil. Consult your installing contractor for proper intervals/procedures for your geographic area or service contract.

Indoor Unit

1 - Clean or change filters.

2 - Lennox blower motors are factory-lubricated and permanently sealed. No more lubrication is needed.

3 - Adjust blower speed for cooling. Measure the pressure drop over the coil to determine the correct blower CFM. Refer to the unit information service manual for pressure drop tables and procedure.

4 - Check all wiring for loose connections.

5 - Check for correct voltage at unit. (blower operating)

6 - Check amp draw on blower motor.

Indoor Coil

1 - Clean coil if necessary.

2 - Check connecting lines, joints and coil for evidence of oil leaks.

3 - Check condensate line and clean if necessary.

Unit Wiring Diagrams

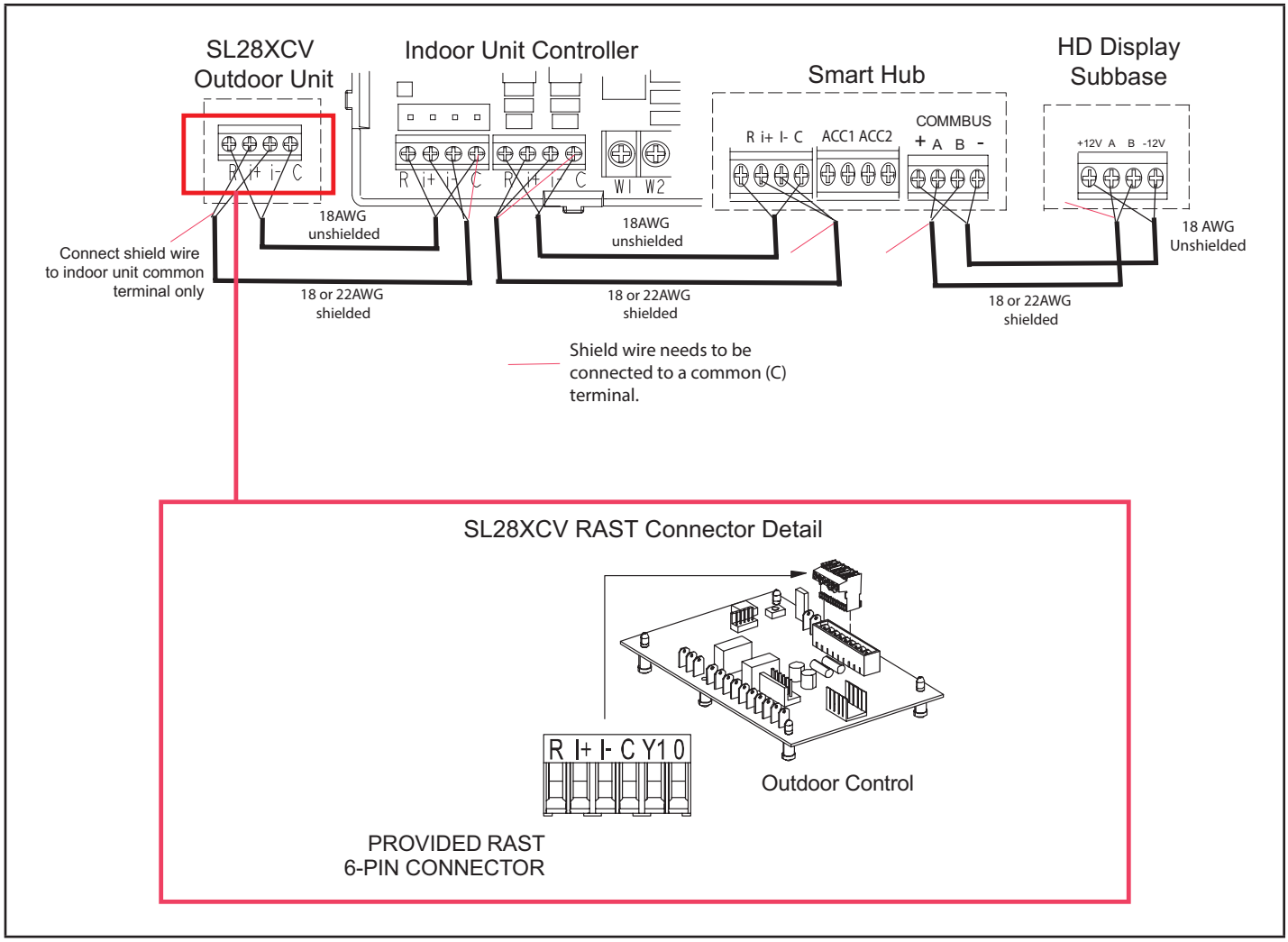

FIGURE 17. SL28XCV with S30 Communicating Thermostat – Field Wiring

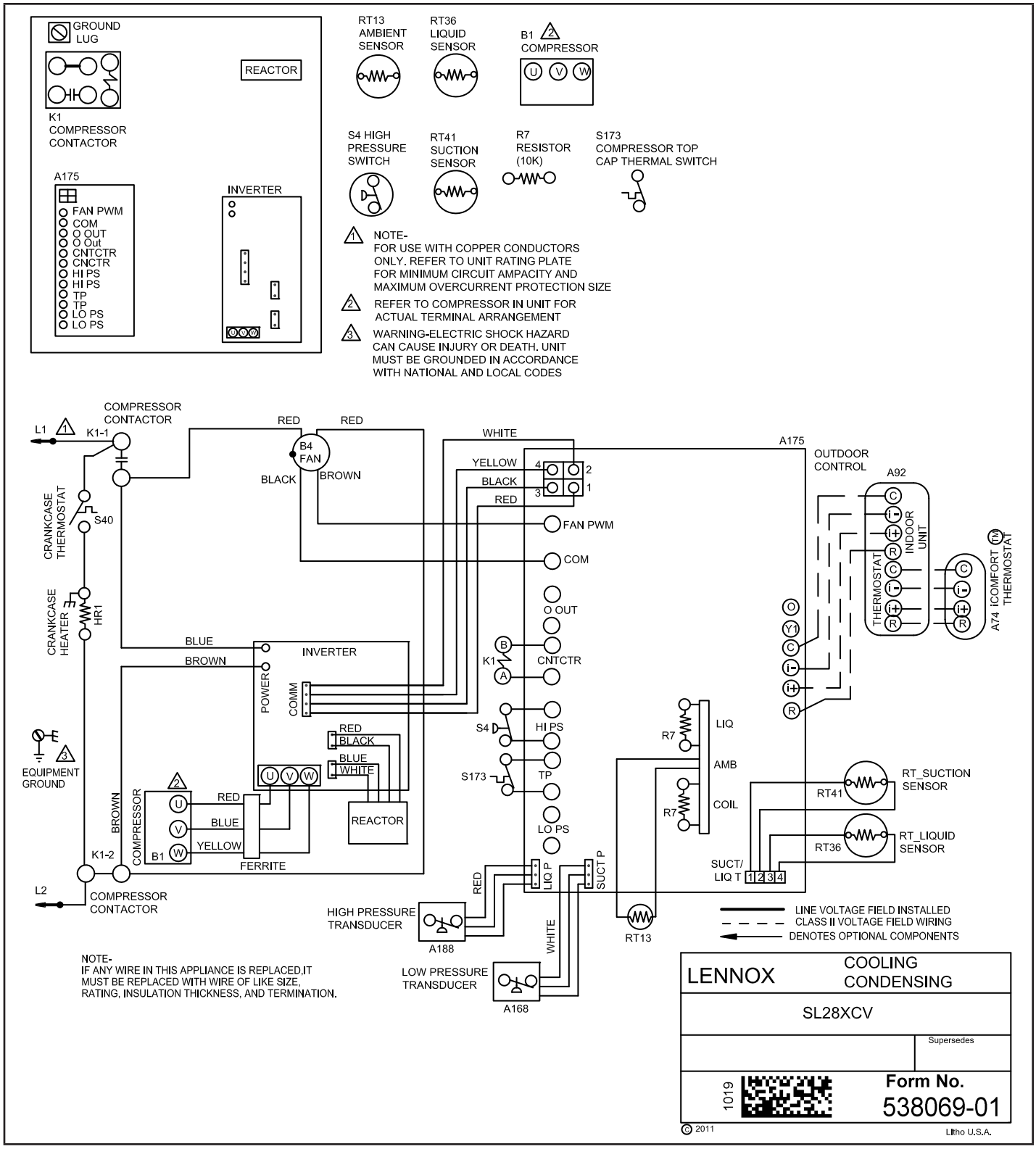

FIGURE 18. Typical Field Wiring

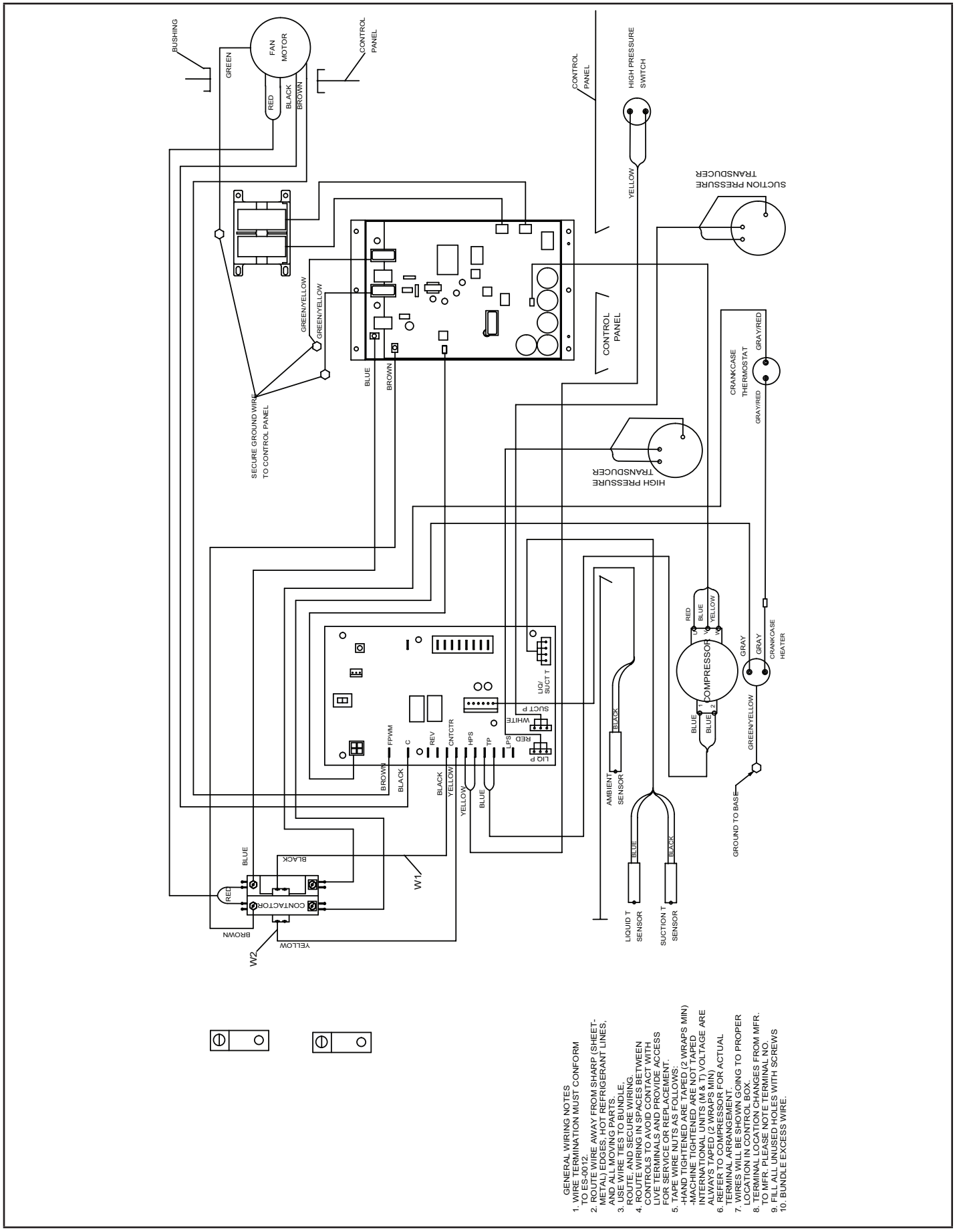

FIGURE 19. Typical Factory Wiring

Unit Sequence of Operation

The following figures illustrate the overall unit sequence of operation along with the operation of various pressure switches and temperature sensors. The figures also illustrate the use of the compressor anti-short-cycle function in relation to unit Status, unit Fault and lockout LED Codes and unit system operation interactions.

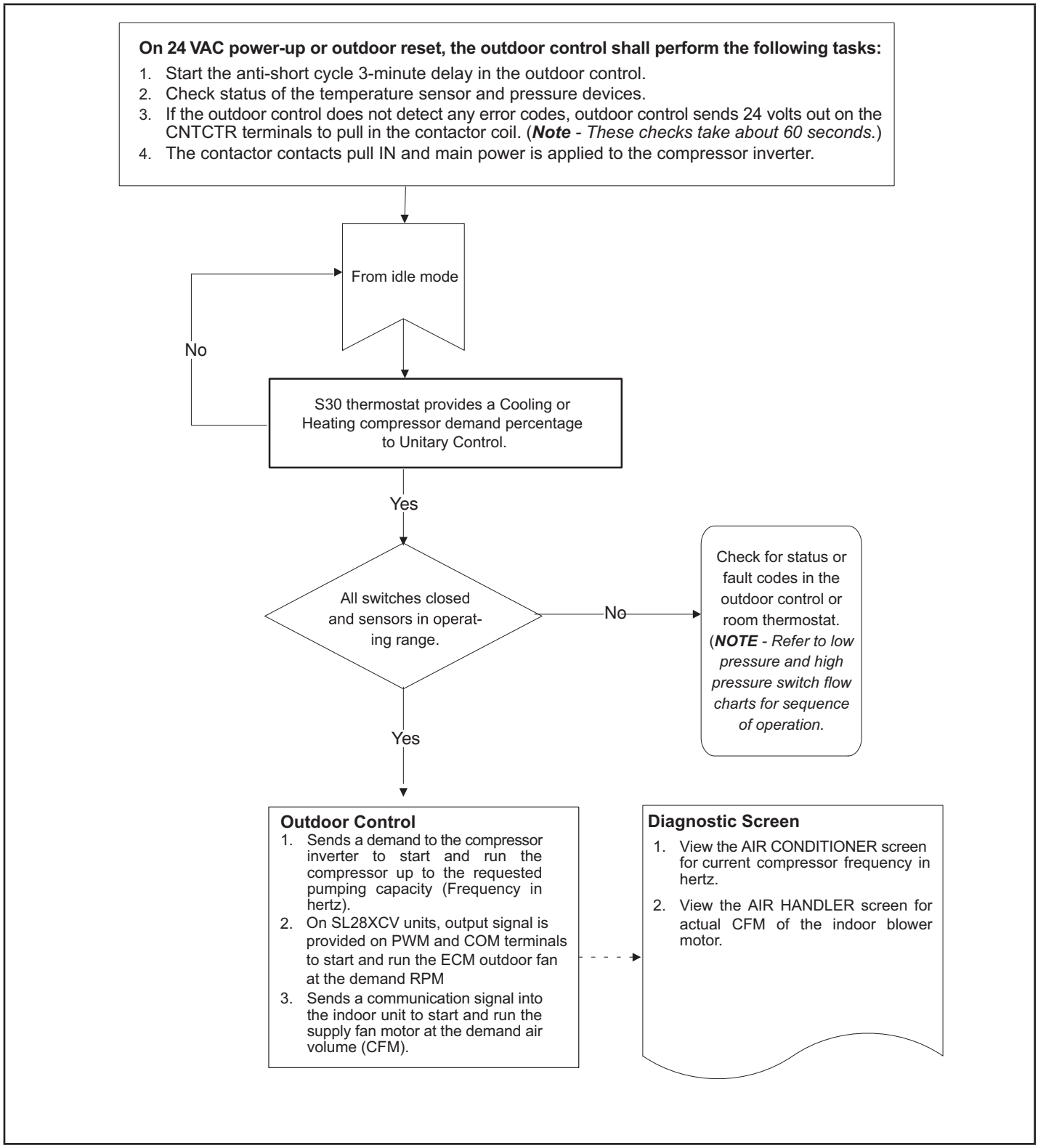

FIGURE 20. 24 Volt Power-Up or Outdoor Reset

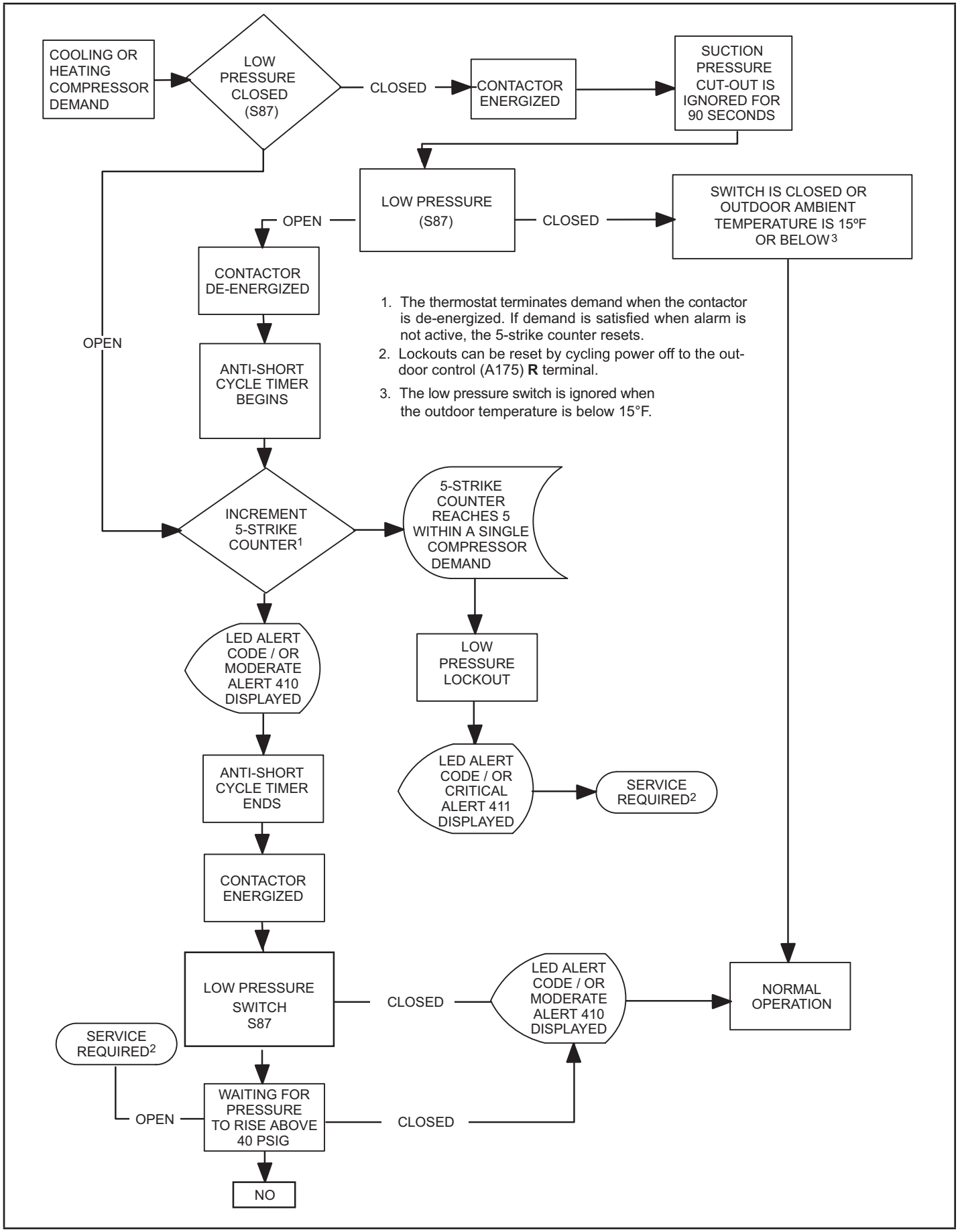

FIGURE 21. Low Pressure Switch (S87) Sequence of Operation

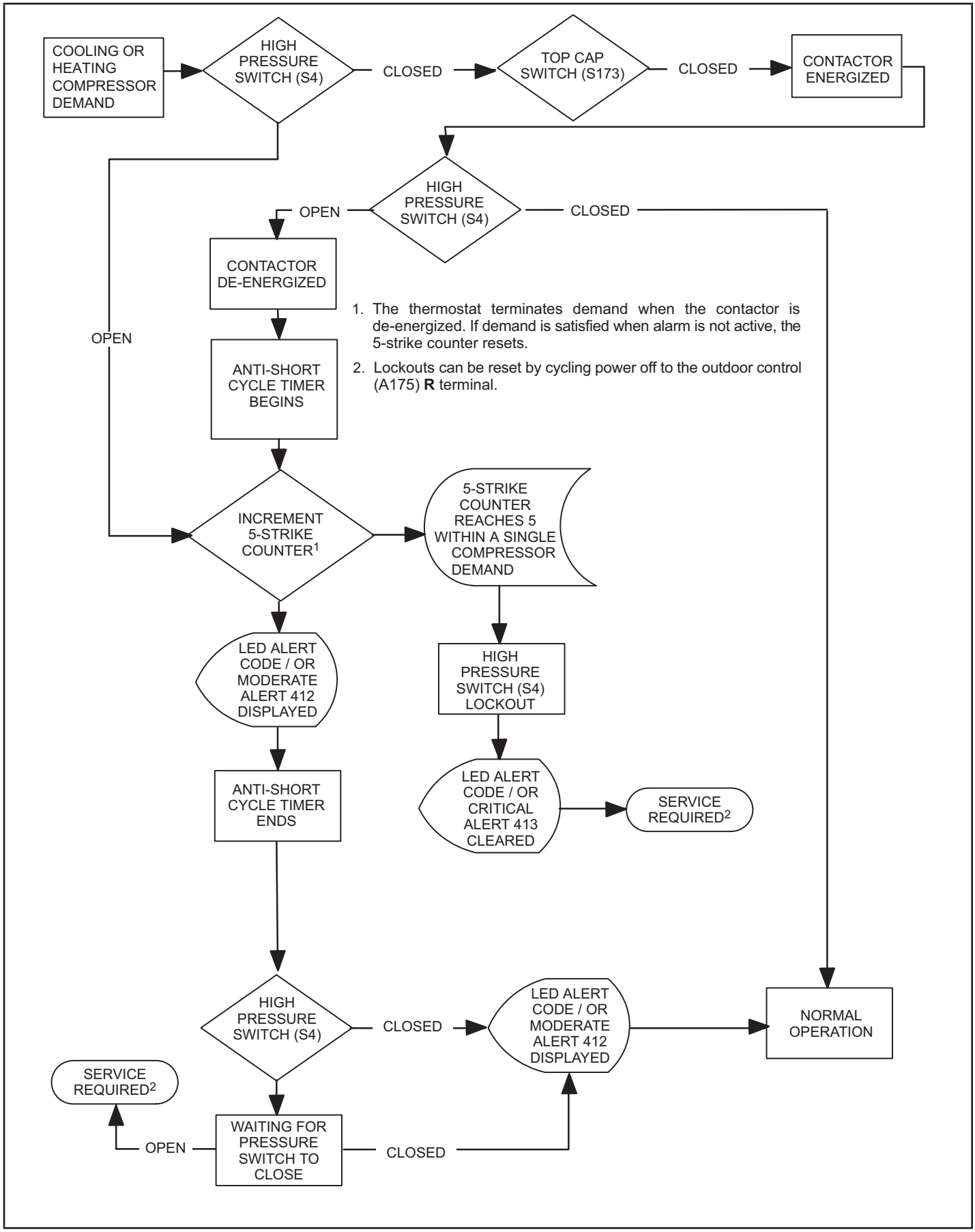

FIGURE 22. High Pressure Switch (S4) Sequence of Operation

Component Testing Table of Contents

Verifying High Pressure Switch and Low Pressure Protection Operation 48
Verifying Suction Pressure Transducer Operation....49
Compressor Operation, Checkout and Status / Error Codes 51
Crankcase Heater, Checkout and Status / Error Codes .55
Compressor Sound Cover 56
Suction Line Filter Drier 56
Liquid Line Filter Drier 56
Top Cap Switch Operation....57
Reactor Operations 58
Outdoor Fan Operation....58
Outdoor Control Operation 59
Unit Sensor Operations 61
DC Inverter Control Operation.... 64

Verifying High Pressure Switch and Low Pressure Protection Operation

OPERATION:

The unit's pressure S4 high pressure switch is factory wired into the control on the HPS terminals.

NOTE – The SL28XCV does not have a low pressure switch and LPS terminals are not jumpered. The unit has a suction pressure transducer that emulates the low pressure switch with a cut-out of 40 PSIG and a cut-in of 90 PSIG. This provide the same protection as a tradition low pressure switch. If the event the suction pressure transducer fails, back up protection is provided by the suction temperature sensor and will open at 25F.

Low Suction Pressure Protection – See figure 21 for low suction pressure protection sequence of operation.

High Pressure Switch (HI-PS) – See figure 22 for high pressure switch sequence of operation.

Pressure Switch Event Settings

The following pressures are the auto-reset event value triggers for low and high pressure thresholds:

- High Pressure (auto-reset) - trip at 590 psig; reset at 418.
- Low Suction Pressure Protection (Suction pressure transducer emulates LPS) (auto-reset) – trip at 40 psig; reset at 90.

CHECKOUT – S4 High Pressure Switch

Using a multimeter set to ohms with the terminals disconnected from the control board, check the resistance between the two terminals of the pressure switch. If the resistance reading is 0 ohms, the switch is closed.

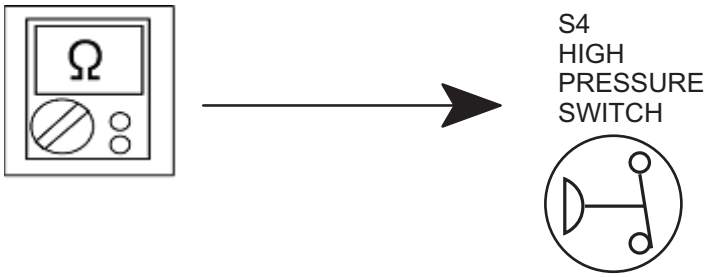

FIGURE 23. Verifying High and Low Pressure Switch Operation

Verifying Suction Pressure Transducer Operation

Using a multimeter set to VDC with the Suction Pressure Transducer connected to the "Suct P" 3-pin connector on the control board. Pin 1 (Red wire +5VDC) to Pin 3 (Black wire - GND) should read 5 VDC continuous. Pin 2 (Blue wire output from transducer) to Pin 3 (Black - GND) should read 0.5 to 4.5 VDC and will vary depending on suction pressure measured. See Table 10.

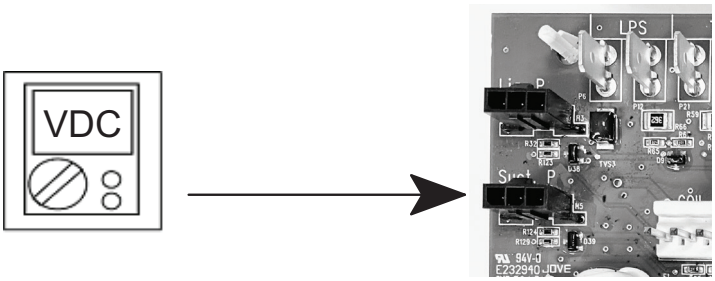

FIGURE 24. Suction Pressure Transducer Voltage

TABLE 10. Suction Pressure Transducer Output Voltage

Suction Pressure (PSIG)	DC Voltage Output (Pin 2 to Pin 3)	Suction Pressure (PSIG)	DC Voltage Output (Pin 2 to Pin 3)
0	0.49	110	2.69
10	0.69	120	2.89
20	0.89	130	3.09
30	1.09	140	3.29
40	1.29	150	3.49
50	1.49	160	3.69
60	1.69	170	3.89
70	1.89	180	4.09
80	2.09	190	4.29
90	2.29	200	4.49
100	2.49	210	4.50

Verifying Liquid Pressure Transducer Operation

Using a multimeter set to VDC with the Liquid Pressure Transducer connected to the "Liq P" 3-pin connector on the control board. Pin 1 (Red wire +5VDC) to Pin 3 (Black wire - GND) should read 5 VDC continuous. Pin 2 (Blue wire output from transducer) to Pin 3 (Black - GND) should read 0.5 to 4.5 VDC and will vary depending on liquid~ pressure measured. See Table 11.

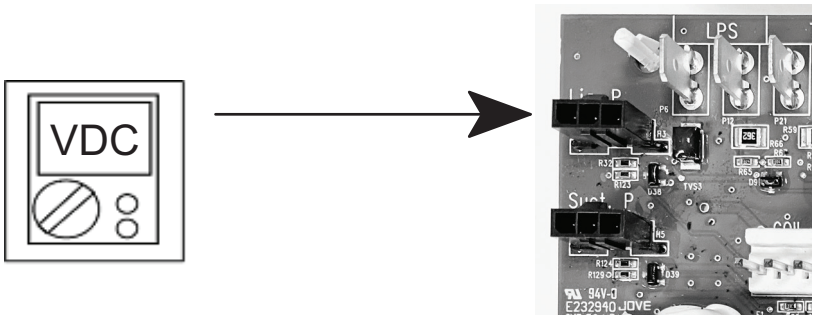

FIGURE 25. Liquid Pressure Transducer Voltage

TABLE 11. Liquid Pressure Transducer Output Voltage

Liquid Pressure (PSIG)	DC Voltage Output (Pin 2 to Pin 3)	Liquid Pressure (PSIG)	DC Voltage Output (Pin 2 to Pin 3)
0	0.50	260	2.58
10	0.58	270	2.66
20	0.66	280	2.74
30	0.74	290	2.82
40	0.82	300	2.90
50	0.90	310	2.98
60	0.98	320	3.06
70	1.06	330	3.14
80	1.14	340	3.22
90	1.22	350	3.30
100	1.30	360	3.38
110	1.38	370	3.46
120	1.46	380	3.54
130	1.54	390	3.62
140	1.62	400	3.70
150	1.70	410	3.78
160	1.78	420	3.86
170	1.86	430	3.94
180	1.94	440	4.02
190	2.02	450	4.10
200	2.10	460	4.18
210	2.18	470	4.26
220	2.26	480	4.34
230	2.34	490	4.42
240	2.42	500	4.50
250	2.50		

High Pressure Switch and Low Pressure Protection Errors

TABLE 12. Outdoor Control 7-Segment Display Alert Codes

System fault and lockout codes take precedence over system status codes (cooling, heating operating percentages or defrost/dehumidification). Only the latest active fault or lockout codes are displayed (if present). If no fault or lockout codes are active, then system status codes are displayed. Alert codes are also displayed on the communicating thermostat.

Alert Codes	Priority	Alarm Description	Possible Causes and Clearing Alarm
E 410	Service Soon	The outdoor unit cycled off due to low pressure switch opening.	Unit pressure is below the lower limit. The system is shutdown. The low pressure switch closes above 90PSIG and opens below 40PSIG. Confirm that the system is properly charged with refrigerant. Check TXV, indoor unit blower motor, dirty filters or clogged refrigerant filter. Confirm that the evaporator coil is clean. The alarm clears after the pressure switch opens or after a power reset.
E 411	Service Urgent	The low pressure switch has opened 5 times within one hour. As a result, the outdoor unit is locked out.	Low pressure switch error count reached 5 strikes. The low pressure switch for HFC410A opens at 40PSIG and resets at 90PSIG. Confirm that the system is properly charged with refrigerant. Check for clogged TXV, blockage to indoor unit blower motor, dirty filters or clogged refrigerant filter. Confirm that the evaporator coil is clean. The alarm clears after a power reset.
E 412	Service Soon	The outdoor unit high pressure switch has opened.	Unit pressure is above the upper limit. System is shut down. The high pressure switch opens at 590PSIG and closes at 418PSIG. Confirm that the system is properly charged with refrigerant. Check for clogged TXV, blockage to indoor unit blower motor, clogged refrigerant filter. Confirm that the outdoor unit is clean. The alarm clears after the pressure switch closes or a power reset. For heating, indoor CFM may be set too low. For zoning system, zone CFM may be set too low.
E 413	Service Urgent	The high pressure switch has opened 5 times within one hour. As a result, the outdoor unit is locked out.	Open high pressure switch error count reached 5 strikes. System is shut down. The high pressure switch for HFC410A will open at 590PSIG and close at 418PSIG. Confirm that the system is properly charged with refrigerant. Check condenser fan motor, clogged TXV, blockage to indoor unit blower motor, stuck reversing valve or clogged refrigerant filter. Confirm that the outdoor unit is clean. The alarm clears after indoor power reset (24VAC power source to Outdoor Control)

Compressor Operation, Checkout and Status / Error Codes

OPERATION:

The SL28XCV units use a 380VAC three phase variable capacity R-Scroll compressor that is approved for use with HFC 410A refrigerant. The compressor, when connected to an inverter, is capable of operating in a running frequency range from 20 hertz up to a maximum of 122 hertz. (maximum hertz is dependent on compressor size). The compressor speed is determined by S30 thermostat demand and in the heating mode, outdoor temperature.

CHECKOUT:

NOTE *- The compressor motor winding resistance is the nominal resistance at 77F. When measuring compressor motor winding resistance, the primary concern is the winding resistance between the different sets of terminals is within 10% of each other. The actual winding resistance is impacted by temperature, refrigerant and oil. Do not automatically condemn a compressor because the measured resistance is slightly higher or lower than the nominal resistance. Check for shorted/open windings and for shorts to ground during testing.*

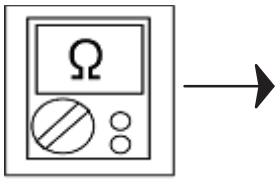

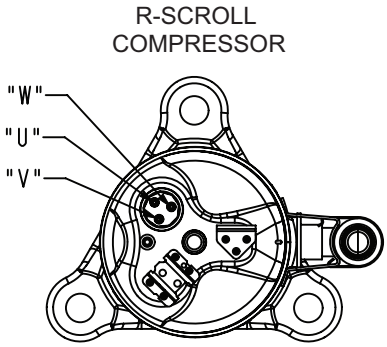

MOTOR WINDING RESISTANCE AT 77° (±7%)			
UNIT	U-V/T1-T2	V-W/T2-T3	W-U/T3-T1
SL28XCV-024	0.529Ω	0.529Ω	0.529 Ω
SL28XCV-036	0.529Ω	0.529Ω	0.529Ω
SL28XCV-048	0.587Ω	0.529Ω	0.529Ω
SL28XCV-060	0.529Ω	0.529Ω	0.529Ω

FIGURE 26. Compressor Operation, Checkout and Status/Error Codes

IMPORTANT: If compressor replacement is required, remove the compressor through the top of the unit. Removal through the access panel is not possible.

FIGURE 27. SL28XCV R-Scroll Compressor Detail

STATUS CODES:

When the compressor is running, the 7-segment display will show the demand as a percentage of compressor cooling or heating capacity, for example, C50 or H50.

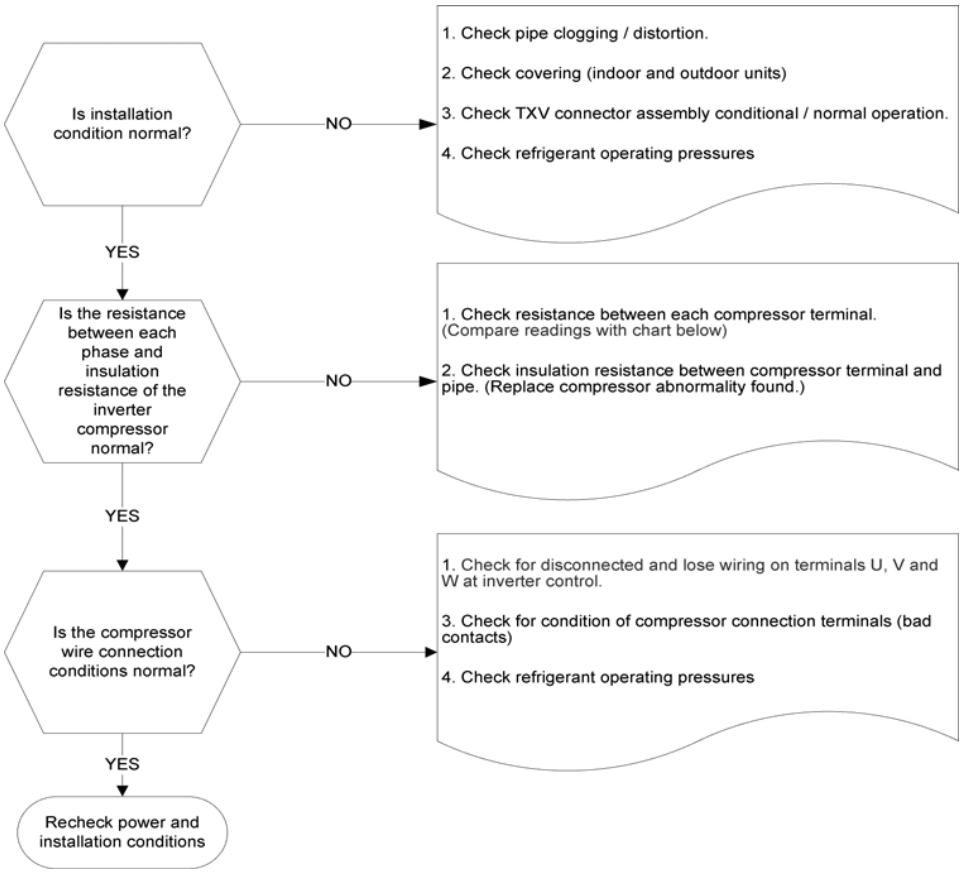

FIGURE 28. Compressor Operation, Checkout and Status/Error Codes

ERROR CODES:

TABLE 13. Outdoor Control 7-Segment Display Alert Codes - Compressor

System fault and lockout codes take precedence over system status codes (cooling, heating operating percentages or defrost/dehumidification). Only the latest active fault or lockout codes are displayed (if present). If no fault or lockout codes are active, then system status codes are displayed. Alert codes are also displayed on the S30 thermostat on systems installed with the S30 thermostat.

Alert Codes	Inverter Code	Inverter LED Flash Code (number of flashes)		Priority	Alarm Description	Possible Causes and Clearing Alarm
		Red LED	Green LED			
E 430	26	2 flashes	6 flashes	Service Soon / Service Urgent	Compressor start failure	If condition is detected, outdoor unit compressor and fan stop. Antishort cycle is initiated. If condition occurs 10 times within an hour, system is locked out. Indicates poor connection at compressor harness, improper winding resistance, locked compressor rotor, or flooded compressor. To clear, disconnect power to the indoor unit (24VAC power source to the outdoor control) which will power off the outdoor control and will open the outdoor unit contactor, which interrupts power to the inverter and then re-apply power.

TABLE 13. Outdoor Control 7-Segment Display Alert Codes - Compressor

System fault and lockout codes take precedence over system status codes (cooling, heating operating percentages or defrost/dehumidification). Only the latest active fault or lockout codes are displayed (if present). If no fault or lockout codes are active, then system status codes are displayed. Alert codes are also displayed on the S30 thermostat on systems installed with the S30 thermostat.

Alert Codes	Inverter Code	Inverter LED Flash Code (number of flashes)		Priority	Alarm Description	Possible Causes and Clearing Alarm
		Red LED	Green LED			
E 433	29	2 flashes	9 flashes	Service Soon / Service Urgent	The inverter has detected a compressor over-current condition.	Error occurs when compressor peak phase current is greater than 28A. Inverter issues code 14 first and slows down to try to reduce the current. If the current remains high, outdoor unit compressor and fan stop. Antishort cycle is initiated. If condition occurs 5 times within an hour, system is locked out. To clear, disconnect power to the indoor unit (24VAC power source to the outdoor control) which will power off the outdoor control and will open the outdoor unit contactor, which interrupts power to the inverter and then re-apply power.
E 439	12	1 flash	2 flashes	Service Soon	Compressor slowdown due to high input current.	Input current is approaching a high limit. Compressor speed automatically slows. The control continues sending the inverter speed demanded by the thermostat. The control sets indoor CFM and outdoor RPM to values according to demand percentage rather than the actual Hz. Alarm is automatically clear.
E 440	13	1 flash	3 flashes	Infor-mation Only - Dealer	Heat sink temperature is approaching limit. The compressor speed automatically slows to reduce heat sink temperature. The control sets indoor CFM and outdoor RPM to values according to demand percentage rather than the actual Hz. Alarm is automatically cleared.	This error code is primarily for informational purposes as the inverter controls the compressor speed to operate within design parameters. Typically the inverter will make a minor speed reduction of 4 Hz (approximately a 5-6% speed reduction) for a brief period of time and to reduce the heat sink temperature and will then resume normal operation. This may occur at high outdoor temperatures (above 110ºF) for brief periods of time (3 – 4 minutes) and is normal and expected operation of the inverter controlling the compressor safely within design parameters. The inverter finned aluminum heat sink is located on the back side of the inverter in the condenser air stream. f the alert code 440 occur frequently, especially at lower outdoor temperatures, check the heat sink for debris that may reduce heat transfer or possible obstructions that may impact air flow across the heat sink. The inverter will begin to briefly reduce the compressor speed when the heat sink temperature rises above 185ºF and will allow the inverter to resume the requested compressor demand speed once the inverter heat sink reaches 176ºF. The heat sink temperature, compressor speed in Hertz & the Inverter Compressor Speed Reduction status (“On” or “Off ”) notification can be viewed under the outdoor unit Diagnostics section of the thermostat dealer control center on units installed with an S30 thermostat.
E 441	14	1 flash	4 flashes	Infor-mation Only - Dealer	Compressor slowdown due to high compressor current. Compressor current is approaching limit. The compressor speed automatically slows. The control sets indoor CFM and outdoor RPM to values according to demand percentage rather than the actual Hz. Alarm is automatically cleared	This error code is primarily for informational purposes as the inverter controls the compressor to operate within design parameters. Alert code 441 typically occurs at startup as the compressor as the currently increases rapidly during startup. The inverter will reduce the compressor speed by 4 hz and slow the compressor ramp up speed to the requested compressor demand (capacity). This is normal and expected operation of the inverter to control the compressor within design parameters. In most cases the alert code 441 does not require any additional service or diagnostic procedures. E441 may also occur if the system is operating at high pressures.
E 600	N/A	N/A	N/A	Service Urgent	Compressor has been cycled OFF by utility load-shedding function.	Load-shedding function: Provides a method for a local utility company to limit the maximum power level usage of the outdoor unit. The feature is activated by applying 24 volts AC power to the L and C terminals on the outdoor control.

Crankcase Heater, Checkout and Status / Error Codes

OPERATION:

CRANKCASE HEATER (HR1)

Compressors in all units are equipped with a 40 watt belly-band type crankcase heater. The heater prevents liquid from accumulating in the compressor. The heater is controlled by the crankcase heater thermostat.

CRANKCASE HEATER THERMOSTAT (S40)

Crankcase heater thermostat S40 controls the crankcase heater in all units and is located on the liquid line (see figure 2 for location).

1. When liquid line temperature drops below 50°F the thermostat closes which results in the heater being energized.
2. When liquid line temperature rises above 70°F the thermostat opens which results in the heater being de-energized.

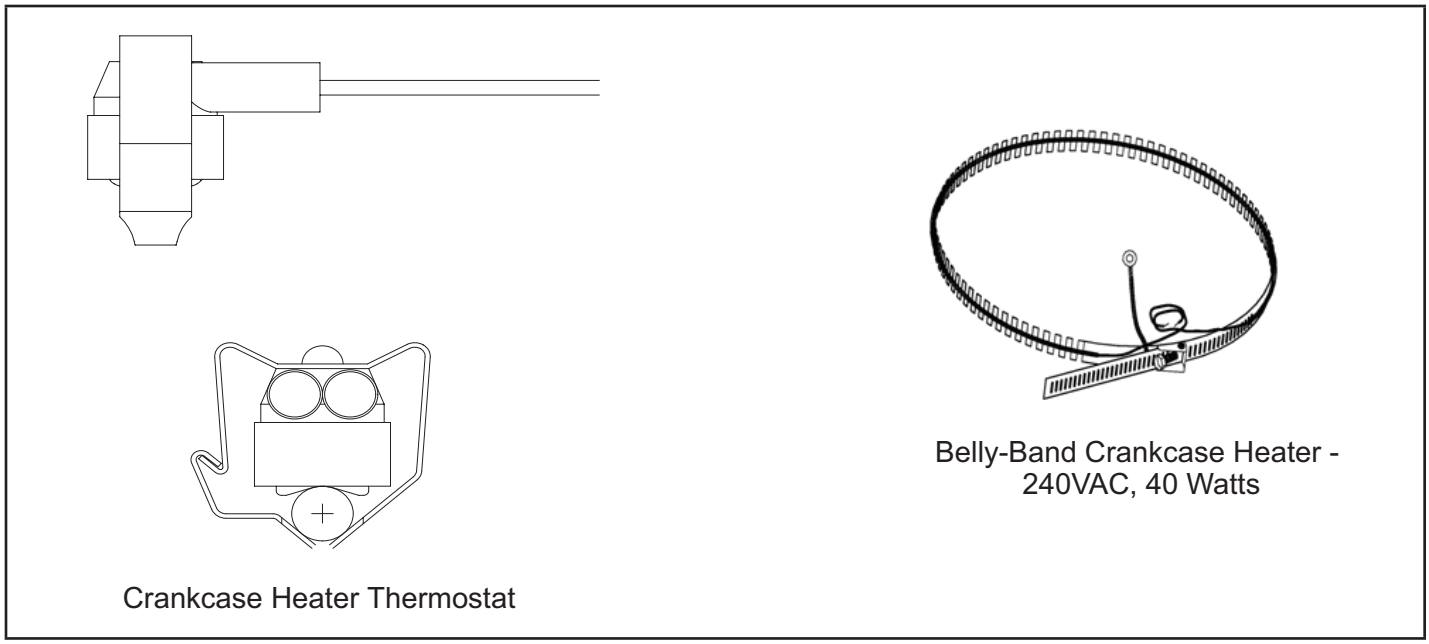

FIGURE 29. Belly-Band Crankcase Heater Thermostat

CHECKOUT:

Belly-Band Crankcase Heater: Using meter set on ohms, check crankcase heater resistance. If resistance is 0 ohms or infinite, replace the crankcase heater.

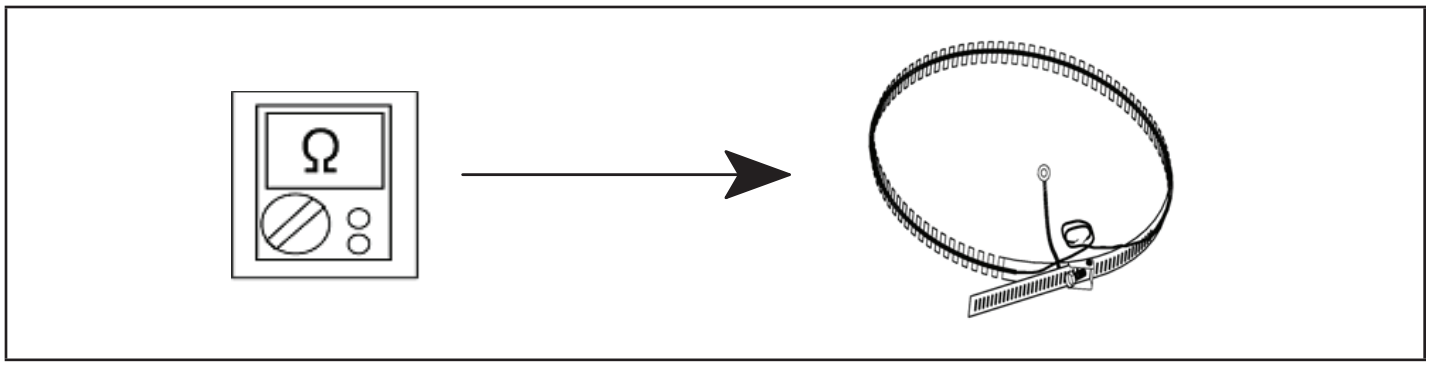

FIGURE 30. Checking Belly-Band Crankcase Heater

Crankcase Heater Thermostat: As the detected temperature changes, the resistance across the sensor changes. Table 17 on page 74 shows how the resistance varies as the temperature changes for this sensor.

NOTE *– When checking the ohms across a sensor, be aware that a sensor showing a resistance value that is not within the range shown in table 15 on page 69, may be performing as designed. However, if a shorted or open circuit is detected, the sensor is faulty; the sensor needs to be replaced.*

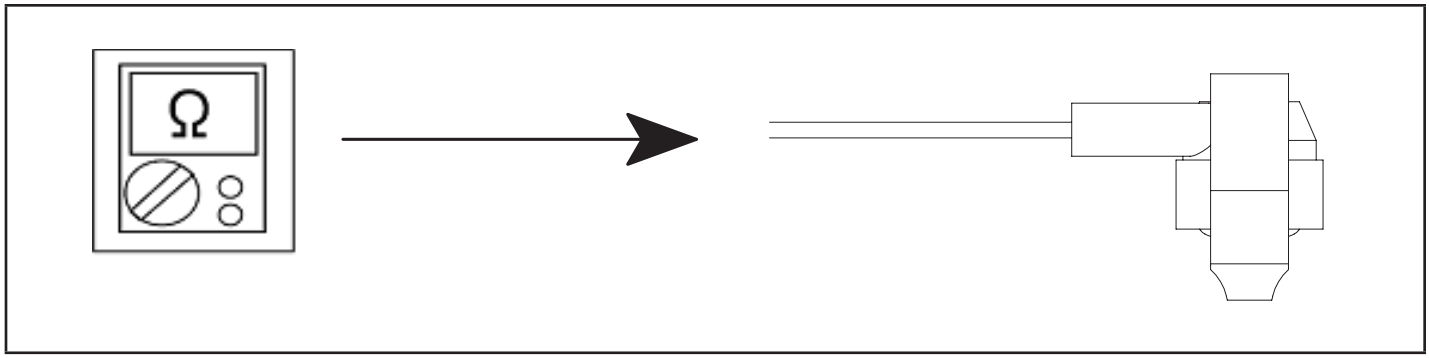

FIGURE 31. Checking Crankcase Heater Thermostat

STATUS CODE:

None

ERROR CODES:

None

Compressor Sound Cover

All units come with two soft-sided polyethylene molded outer shell compressor sound covers; an inner and outer sound cover. The covers help reduce any unwanted operating sounds from the compressor. The cover features a hook/loop closure system for ease of installation on the compressor.

Compressor Sound Dampener

The SL28XCV units have (3) high density rubber sound dampeners located on the compressor suction line between the compressor suction line connection and the accumulator. See figures 2, 3 and 4 on pages 6, 7 and 8. The compressor sound dampeners reduce the compressor sound levels and must be securely fastened and in tight contact to the suction line to be effective.

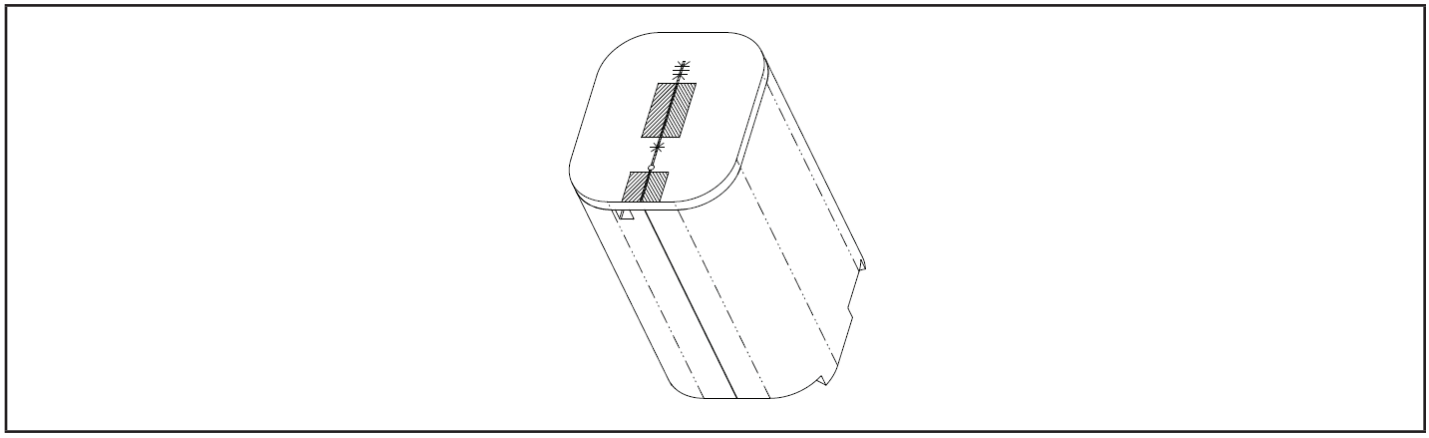

FIGURE 32. Compressor Sound Cover

Liquid Line Filter Drier

The SL28XCV units have a R-Scroll scroll compressor and have a bi-flow liquid line filter drier that is factory-installed in the liquid line. The filter drier is designed to remove moisture and foreign matter, which can lead to compressor failure.

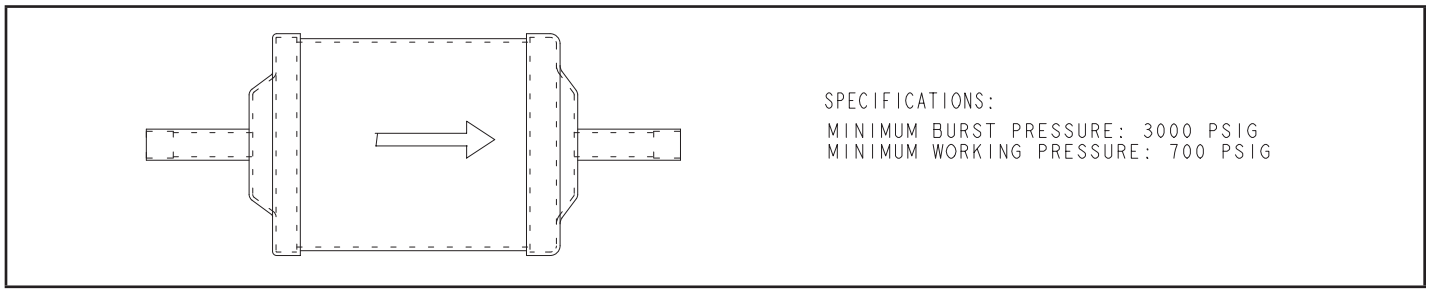

FIGURE 33. Liquid Line Filter Drier

Top Cap Switch Operation, Checkout and Status / Error Codes

OPERATION:

Top Cap Thermal Sensor Switch (S173)

Some units are equipped with a compressor-mounted normally closed temperature switch that prevents compressor damage due to overheating caused by internal friction. The switch is located on top of the compressor casing. This switch senses the compressor casing temperature and opens at 239-257°F to shut off compressor operation. The auto-reset switch closes when the compressor casing temperature falls to 151-187°F, and the compressor is re-energized. This is a single-pole, single-throw (SPST) bi-metallic switch.

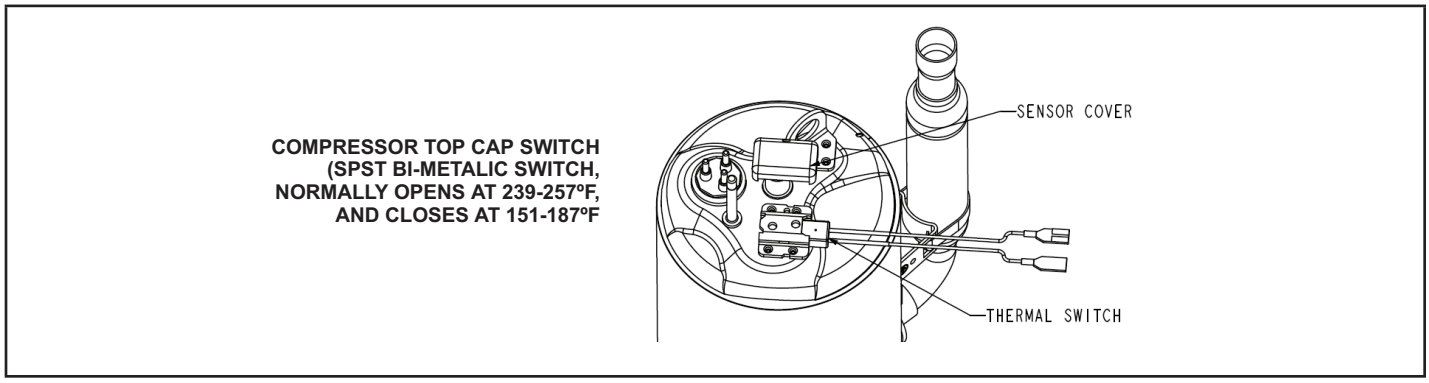

FIGURE 34. Top Cap Thermal Sensor Switch

CHECKOUT:

Using a multimeter set to ohms, with the terminals disconnected from the system, check the resistance between the two terminals of the top cap switch. If the meter display does not change, the switch is open. If the meter display goes to infinite, the switch is closed.

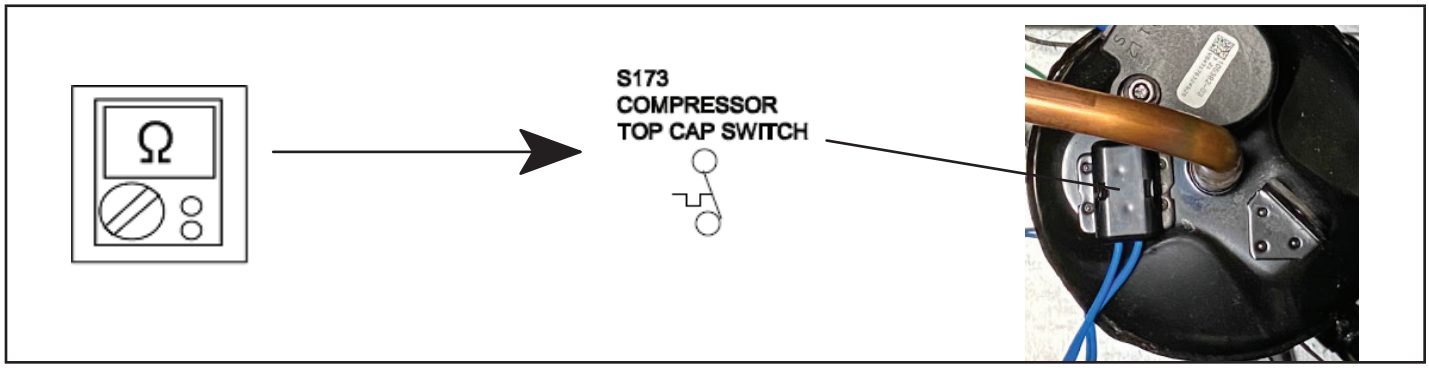

FIGURE 35. Verifying Top Cap Thermal Sensor Switch

STATUS:

None

ERROR:

TABLE 14. Outdoor Control 7-Segment Display Alert Codes - Top Cap Switch

NOTE - System fault and lockout codes take precedence over system status codes (cooling, heating operating percentages or defrost/dehumidification). Only the latest active fault or lockout codes are displayed (if present). If no fault or lockout codes are active, then system status codes are displayed. Alert codes are also displayed on the communicating thermostat.

Alert Codes	Priority	Alarm Description	Possible Causes and Clearing Alarm
E 422	Service Soon	Compressor top cap switch exceeding thermal limit.	The top of the compressor is hot. Refrigerant charge may be low, or low mass flow of refrigerant. Check TXV, clogged filter drier, condenser fan motor, indoor blower motor, confirm indoor coil is clean. Check to make sure the blue wires from the top thermostat did not get pulled off one of the TP terminal on the outdoor control board.
E 442	Service Urgent	The top cap switch has opened 5 times within one hour. As a result, the outdoor unit is locked out.	When compressor thermal protection sensor opens 5 times within 1 hour, outdoor stops working. To clear, disconnect power to the indoor unit (24VAC power source to the outdoor control) which will power off the outdoor control and will open the outdoor unit contactor, which interrupts power to the inverter and then re-apply power.

Reactor Operations, Checkout and Status / Error Codes

OPERATION:

Reactor (Inductor or choke) is a passive two-terminal electrical component that stores energy in its magnetic field. Reactors are one of the basic components used in electronics where current and voltage change with time, due to the ability of inductors to delay and reshape alternating currents.

CHECKOUT:

Main Power ON – Voltage IN reactor should be the same as the voltage OUT. With main power OFF and reactor disconnected from system; resistance between leads should be the same

STATUS CODES:

None

ERROR CODES:

None

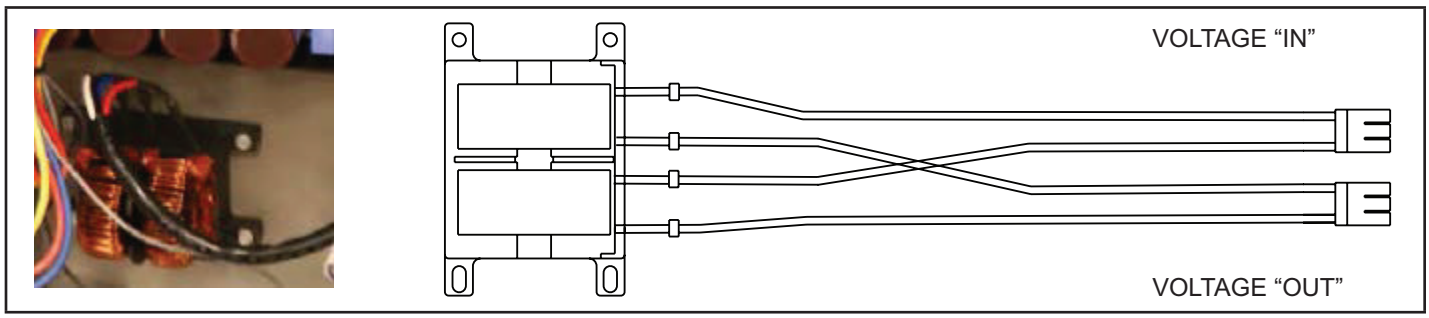

FIGURE 36. SL28XCVS/E18XCV Reactor

Outdoor Fan Operation and Checkout

OPERATION:

The SL28XCV units have a variable speed ECM fan motor. The variable speed ECM fan motor is controlled by PWM fan output when the compressor is running and will vary the fan speed to match the compressor capacity.

LOW AMBIENT OPERATION:

The SL28XCV units have factory installed low ambient cooling mode operation that will control the condenser fan motor based upon liquid line temperature.

The SL28XCV units have a variable speed ECM fan motor. The outdoor control will begin to modulate the outdoor fan motor speed is below 65°F to maintain a liquid line sensor temperature between 58°F and 70°F. If the liquid line sensor drops below 55°F the control will cycle the fan off until liquid temperature rises above 58°F.

CHECKOUT:

VAC Voltage Check

Check for 208/240 VAC power at inverter contactor (red wires) (see figure 49).

Units with ECM Motor

1. With the unit running, check for 230VAC at the red outdoor fan motor wires at the contactor. If no voltage is present check main power at the contactor.
2. Perform a DC voltage check between the FPWM and Fan C terminal.
3. Using the push button on the control, enter the "fan test mode" in the "field test mode" by pushing and holding the button until solid "-" appears, release the button. Display will start flashing, within 10 seconds, push and hold the button until the "F" symbol displays then release the button. Display will begin to flash "F", within 10 seconds, push and hold the button until it stops flashing, release the button. Outdoor fan motor will cycle on for 10 minutes. To exit, push and hold the button until three horizontal bars display. Release the button and the outdoor fan will cycle off.

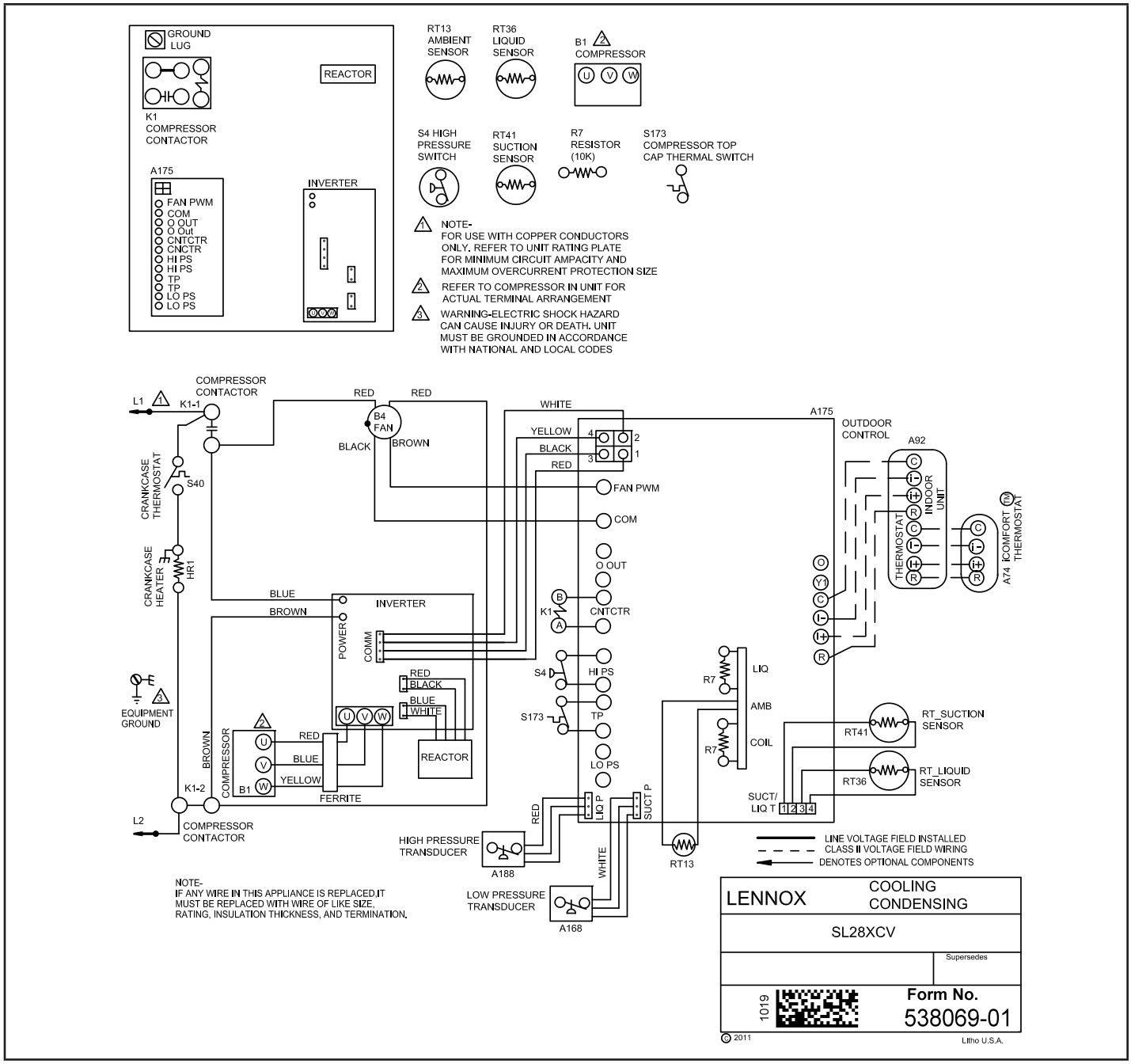

FIGURE 37. VAC Voltage Check

Outdoor Control Operation, Checkout and Status / Error Codes

OPERATION:

The outdoor control is a microprocessor-based device for use with variable-capacity compressors up to 5-tons in capacity operating on 24VAC residential power. The outdoor control integrates the functionality of maintaining compressor speed, and outdoor fan control of ECM motors. The outdoor control is self-configuring. During start-up the outdoor control selects one of two configurations variable-capacity air conditioner or variable-capacity heat pump.

The SL28XCV is a fully communicating system and must be installed with an S30 communicating thermostat and a communicating indoor unit.

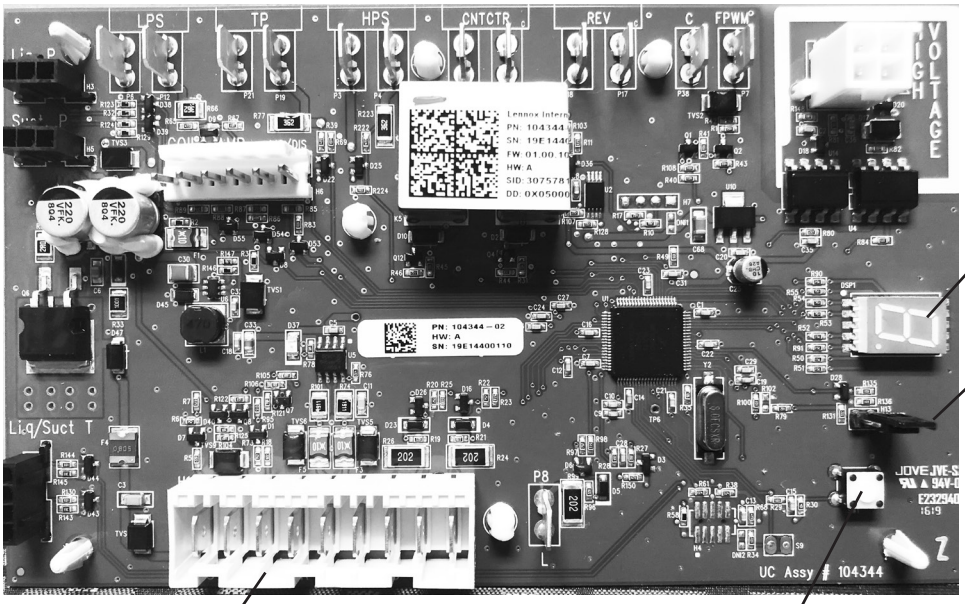

7 SEGMENT DISPLAY

PUMP DOWN – WHEN UNIT IS IN PUMP DOWN MODE, *Pd* WILL BE DISPLAYED ON 7-SEGMENT.
TO ACTIVATE PUMP DOWN MODE, THE CONTROL MUST BE IN THE IDLE STATE, AND THE PUMP DOWN JUMPER PLACED ACROSS THE TWO PUMP DOWN PINS.
TO DEACTIVATE, REMOVE JUMPER.

RAST TERMINALS FOR THERMOSTAT WIRING CONNECTION

PUSH BUTTON

FIGURE 38. Outdoor Control Unit

STATUS CODES:

TABLE 15. Outdoor Control 7-Segment Display Alert Codes - Outdoor Control Status

NOTE - System fault and lockout codes take precedence over system status codes (cooling, heating operating percentages or defrost/dehumidification). Only the latest active fault or lockout codes are displayed (if present). If no fault or lockout codes are active, then system status codes are displayed. Alert codes are also displayed on the S30 thermostat.

Alert Codes	Priority	Alarm Description	Possible Causes and Clearing Alarm
E 600	Service Urgent	Compressor has been cycled OFF on utility load shedding	Load shedding function: Provides a method for a local utility company to limit the maximum power level usage of the outdoor unit. The feature is activated by applying 24 volts AC power to the L and C terminals on the outdoor control.
E 601	Service Urgent	Outdoor unit has been cycled OFF on low temperature protection.	Low temperature Protection: Outdoor unit will not operate when the outdoor temperature is at or below 4° F (20°C). If the unit is operating and the outdoor temperature drops below 4°F (20°C), the unit will continue to operate until the room thermostat is satisfied or the outdoor temperature drops to 15°F (26°C). (Outdoor unit ambient sensor provides temperature readings.)

System Configuration

SL28XCV Thermostat Control

The SL28XCV variable capacity units are a fully communicating system and must be installed with an S30 thermostat and a communicating indoor unit.

S30 Communicating Thermostat Control

The SL28XCV variable capacity unit must be installed as a fully communicating system consisting of S30 Smart Communicating Thermostat, an indoor unit and the SL28XCV variable capacity outdoor unit wired with (4) communication wires (R, I+, I- and C) connected to the SL28XCV Outdoor Unitary Control.

The SL28XCV variable capacity unit when wired as a fully communicating system will take full advantage of the advanced diagnostics and control, Wi-Fi accessibility and system operation parameters. Refer to the SL28XCV field wiring diagram for an S30 communicating thermostat.

Unit Operation

SL28XCV Unit Operation with an S30 Communicating Thermostat

The SL28XCV unit must be installed with an S30 communicating thermostat and enabled indoor unit. The unit capacity will be controlled in the variable capacity mode throughout the range of capacity from minimum capacity to maximum capacity based upon thermostat demand in cooling mode. The indoor air volume will be controlled to match compressor capacity throughout the capacity range.

ERROR CODES:

TABLE 16. Outdoor Control 7-Segment Display Alert Codes - Outdoor Control Errors

NOTE - System fault and lockout codes take precedence over system status codes (cooling, heating operating percentages or defrost/dehumidification). Only the latest active fault or lockout codes are displayed (if present). If no fault or lockout codes are active, then system status codes are displayed. Alert codes are also displayed on the S30 thermostat.

Alert Codes	Priority	Alarm Description	Possible Causes and Clearing Alarm
E 105	Service Soon	The outdoor control has lost communication with either the thermostat or indoor unit.	Equipment is unable to communicate. Indicates numerous message errors. In most cases errors are related to electrical noise. Make sure high voltage power is separated from RSBus. Check for miswired and/or loose connections between the stat, indoor unit and outdoor unit. Check for a high voltage source of noise close to the system. Fault clears after communication is restored.
E 120	Service Soon	There is a delay in the outdoor unit responding to the system.	Typically, this alarm/code does not cause any issues and will clear on its own. The alarm / code is usually caused by a delay in the outdoor unit responding to the thermostat. Check all wiring connections. Cleared after unresponsive device responds to any inquiry.
E 124	Service Urgent	The S30® thermostat has lost communication with the outdoor unit for more than 3 minutes.	Equipment lost communication with the thermostat. Check the wiring connections, ohm wires and cycle power. The alarm stops all associated HVAC operations and waits for a heartbeat message from the unit that's not communicating. The alarm / fault clears after communication is re-established.
E 125	Service Urgent	There is a hardware problem with the outdoor control.	There is a control hardware problem. Replace the outdoor control if the problem prevents operation and is persistent. The alarm / fault is cleared 300 seconds after the fault recovers
E 131	Service Urgent	The outdoor unit control parameters are corrupted	Reconfigure the system. Replace the control if heating or cooling is not available.
E 132	Service Urgent	Internal software error	Replace outdoor control.

Unit Sensor Operation, Checkout and Status /Error Codes

OPERATION:

6-Pin Sensor Harness (COIL, AMB, LIQ/DIS)

Liq/Dis Sensor (R7 - No Sensor)

There is no sensor located on positions 5 and 6 of the connector. A 10K Ohm resistor installed between pins 5 and 6 on the cable harness provides continuity for this circuit.

Ambient Temperature Sensor (RT13)

Ambient temperatures, as read by the ambient temperature sensor connected to pin 3 and pin 4, which are below -35°F (-37°C) or above 120°F (48°C) trigger a fault condition. If the ambient sensor is open, shorted, or out of the temperature range of the sensor, the control displays the appropriate alert code. Heating and cooling operation is allowed in this fault condition

Coil Temperature Sensor (R7 - No Sensor)

There is no sensor located on position 1 to position 2 of the connector. A 10K ohm resistor is installed between pins 1 and 2 on the cable harness and provides continuity for this circuit.

4-Pin Suction Temperature Sensor / Liquid Temperature Sensor Harness

Suction Line Sensor (RT41)

Suction line temperature is read by the suction line temperature sensor between Pins 1 and Pin 2 of the 4-pin sensor harness. Nominal Resistance of the sensor is 10K ohms at 77F. The control will display are E182 error code if the sensor reads open or shorted for 24 hours. Cooling operation is allowed with this fault.

Liquid Line Temperature Sensor (RT36)

Liquid line temperature is read by the liquid line temperature sensor between Pins 3 and Pin 4 of the 4-pin sensor harness. Nominal Resistance of the sensor is 10K ohms at 77F. The control will display are E184 error code if the sensor reads open or shorted for 24 hours. Cooling operation is allowed with this fault.

SENSOR	TEMP RANGE ºF (ºC)	RESISTANCE VALUES RANGE (OHMS)	PIN# / WIRE SLEEVE COLOR
NONE	N/A	10K Ohms Nominal	6 AND 5
OUTDOOR AMBIENT	-40 (-40) TO 140 (60)	336,000 to 2,487 (see table 16 on page 74 for exact temperature to ohm readings)	4 AND 3 (**BLACK**)
NONE	N/A	N/A	2 AND 1

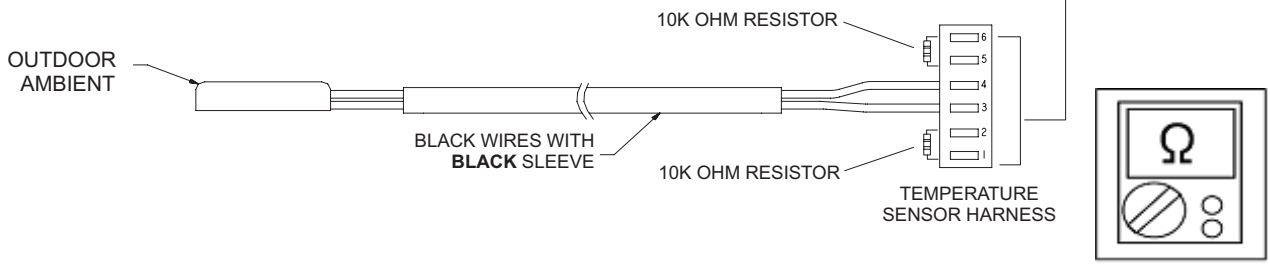

FIGURE 39. Temperature Sensor Specification

CHECKOUT:

Sensors connect to the outdoor control through a field-replaceable harness assembly that plugs into the outdoor control. Through the sensors, the control detects outdoor ambient, coil and liquid temperature fault conditions. As the detected temperature changes, the resistance across the sensor changes. Check sensor operation by reading ohms across pins shown in figure 49.

NOTE *– When checking the ohms across a sensor, be aware that a sensor showing a resistance value that is not within the range shown in figure 49, may be performing as designed. However, if a shorted or open circuit is detected, then the sensor may be faulty and the sensor harness will need to be replaced.*

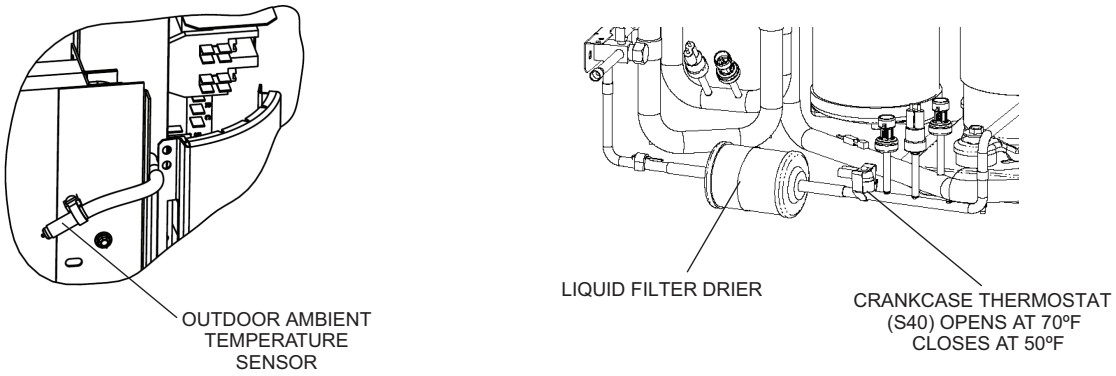

FIGURE 40. Temperature Sensor Locations

TABLE 17. Ambient and Liquid Line Sensors Temperature / Resistance Range

Degrees Fahr-enheit	Resistance	Degrees Fahr-enheit	Resistance	Degrees Fahr-enheit	Resistance	Degrees Fahr-enheit	Resistance
136.3	2680	56.8	16657	21.6	44154	-11.3	123152
133.1	2859	56.0	16973	21.0	44851	-11.9	125787
130.1	3040	55.3	17293	20.5	45560	-12.6	128508
127.3	3223	54.6	17616	20.0	46281	-13.2	131320
124.7	3407	53.9	17942	19.4	47014	-13.9	134227
122.1	3592	53.2	18273	18.9	47759	-14.5	137234
119.7	3779	52.5	18607	18.4	48517	-15.2	140347
117.5	3968	51.9	18945	17.8	49289	-15.9	143571
115.3	4159	51.2	19287	17.3	50074	-16.5	146913
113.2	4351	50.5	19633	16.8	50873	-17.2	150378
111.2	4544	49.9	19982	16.3	51686	-17.9	153974
109.3	4740	49.2	20336	15.7	52514	-18.6	157708
107.4	4937	48.5	20695	15.2	53356	-19.3	161588
105.6	5136	47.9	21057	14.7	54215	-20.1	165624
103.9	5336	47.3	21424	14.1	55089	-20.8	169824
102.3	5539	46.6	21795	13.6	55979	-21.5	174200
100.6	5743	46.0	22171	13.1	56887	-22.3	178762
99.1	5949	45.4	22551	12.5	57811	-23.0	183522
97.6	6157	44.7	22936	12.0	58754	-23.8	188493
96.1	6367	44.1	23326	11.5	59715	-24.6	193691
94.7	6578	43.5	23720	11.0	60694	-25.4	199130
93.3	6792	42.9	24120	10.4	61693	-26.2	204829
92.0	7007	42.3	24525	9.9	62712	-27.0	210805
90.6	7225	41.7	24934	9.3	63752	-27.8	217080
89.4	7444	41.1	25349	8.8	64812	-28.7	223677
88.1	7666	40.5	25769	8.3	65895	-29.5	230621
86.9	7890	39.9	26195	7.7	67000	-30.4	237941
85.7	8115	39.3	26626	7.2	68128	-31.3	245667
84.5	8343	38.7	27063	6.7	69281	-32.2	253834
83.4	8573	38.1	27505	6.1	70458	-33.2	262482
82.3	8806	37.5	27954	5.6	71661	-34.1	271655
81.2	9040	37.0	28408	5.0	72890	-35.1	281400
80.1	9277	36.4	28868	4.5	74147	-36.1	291774
79.0	9516	35.8	29335	3.9	75431	-37.1	302840
78.0	9757	35.2	29808	3.4	76745	-38.2	314669
77.0	10001	34.7	30288	2.8	78090	-39.2	327343
76.0	10247	34.1	30774	2.3	79465		
75.0	10496	33.5	31267	1.7	80873		
74.1	10747	33.0	31766	1.2	82314		
73.1	11000	32.4	32273	0.6	83790		
72.2	11256	31.9	32787	0.0	85302		
71.3	11515	31.3	33309	-0.5	86852		
70.4	11776	30.7	33837	-1.1	88440		
69.5	12040	30.2	34374	-1.7	90068		
68.6	12306	29.6	34918	-2.2	91738		
67.7	12575	29.1	35471	-2.8	93452		
66.9	12847	28.6	36031	-3.4	95211		
66.0	13122	28.0	36600	-4.0	97016		
65.2	13400	27.5	37177	-4.6	98870		
64.4	13681	26.9	37764	-5.2	100775		
63.6	13964	26.4	38359	-5.7	102733		
62.8	14251	25.8	38963	-6.3	104746		
62.0	14540	25.3	39577	-6.9	106817		
61.2	14833	24.8	40200	-7.5	108948		
60.5	15129	24.2	40833	-8.2	111141		
59.7	15428	23.7	41476	-8.8	113400		
59.0	15730	23.2	42130	-9.4	115727		
58.2	16036	22.6	42794	-10.0	118126		
57.5	16345	22.1	43468	-10.6	120600		

ERROR CODES:

TABLE 18. Outdoor Control 7-Segment Display Alert Codes – Outdoor Control Errors

NOTE - System fault and lockout codes take precedence over system status codes (cooling, heating operating percentages or defrost/dehumidification). Only the latest active fault or lockout codes are displayed (if present). If no fault or lockout codes are active, then system status codes are displayed. Alert codes are also displayed on the S30 thermostat.

Alert Codes	Priority	Alarm Description	Possible Causes and Clearing Alarm
E 180	Service Soon / Service Urgent	The S30 thermostat has found a problem with the outdoor unit's ambient temperature sensor.	During normal operation, after the outdoor control recognizes sensors, the alarm will be sent only if valid temperature reading is lost. Compare outdoor sensor resistance to temperature/resistance charts in unit installation instructions. Replace sensor pack if necessary. At the beginning of (any) configuration, furnace or air-handler control will detect the presence of the sensor(s). If detected (reading in range), appropriate feature will be set as 'installed' and shown in the S30 thermostat 'About' screen. The alarm / fault will clear upon configuration, or sensing normal values.
E 182	Service Soon	Suction Temperature Sensor has malfunctioned	Sensor is open or shorted. Replace the Sensor
E 183	Service Soon	Liquid Pressure Transducer Fault	Liquid pressure transducer is out of range. The signal should be between 0.5 VDC and 4.5 VDC between Blue and Black. The error code will be cleared when the proper signal is provided. Systems controlled by a conventional 24VAC heat pump thermostat will operate in stage mode.
E 184	Service Soon	Faulty outdoor liquid line sensor	Sensor is open or shorted. Replace the sensor.

DC Inverter Control Operation, Checkout, Status / Error Codes

OPERATION OF COMPONENTS:

Electromagnetic compatibility circuit (EMC): EMC ensures the correct operation of different equipment items which use or respond to electromagnetic phenomena. It also helps to negate the effects of interference.

CONVERTER:

Converts AC (alternating current) to DC (direct current).

POWER FACTOR CORRECTION (PFC) CIRCUIT:

The PFC module is an integrated part of the outdoor inverter that monitors the DC bus for high, low and abnormal voltage conditions. If any of these conditions are detected, the PFC function and compressor will stop.

INTELLIGENT (INVERTER) POWER MODULE (IPM):

The IPM converts DC power into AC power. The control method is known as pulse width modulation (PWM). This means the DC is switched on and off very quickly (chopped) by the transistor switches to make simulated AC at required frequency and voltage.

COMMUNICATION CONTROL CIRCUIT:

Receives and sends message between the inverter and the outdoor control.

STATUS CODES:

TABLE 19. Outdoor Control 7-Segment Display Alert Codes and Inverter LED Flash Codes

NOTE - System fault and lockout codes take precedence over system status codes (cooling, heating operating percentages or defrost/dehumidification). Only the latest active fault or lockout codes are displayed (if present). If no fault or lockout codes are active, then system status codes are displayed. Alert codes are also displayed on the S30 thermostat.

Alert Codes	Inverter LED Flash Code (number of flashes)		Prority	Alarm Description	Possible Causes and Clearing Alarm
	Red LED	Green LED			
N/A	ON	OFF	N/A	SL28XCV-024 only: Indicates inverter is operating normally.	
N/A	ON	ON	N/A	SL28XCV-036, -048, -060 only: Indicates inverter is operating normally.	
N/A	OFF	OFF	N/A	Indicates inverter is NOT energized.	

ERROR CODES:

TABLE 20. Outdoor Control 7-Segment Display Alert Codes and Inverter LED Flash Codes

NOTE - System fault and lockout codes take precedence over system status codes (cooling, heating operating percentages or defrost/dehumidification). Only the latest active fault or lockout codes are displayed (if present). If no fault or lockout codes are active, then system status codes are displayed. Alert codes are also displayed on the S30 thermostat.

Alert Codes	Inverter Code	Inverter LED Flash Code (number of flashes)		Priority	Alarm Description	Possible Causes and Clearing Alarm
		Red LED	Green LED			
E 423	40	4 flashes	OFF	Service Soon / Service Urgent	The inverter has detected a circuit problem.	Control will lock out after 10 strikes within an hour. To clear, disconnect power to the indoor unit (24VAC power source to the outdoor control) which will power off the outdoor control and will open the outdoor unit contactor, which interrupts power to the inverter and then re-apply power.
E 426	N/A	N/A	N/A	Service Urgent	Excessive inverter alarms	After ten faults within one hour, control will lock out. Indicates poor system operation. Review history of alarms to resolve system setup. Check condenser fan motor, TXV, indoor unit blower motor, stuck reversing valve, overcharge, undercharge, and clogged refrigerant filter. To clear, disconnect power to the indoor unit (24VAC power source to the outdoor control) which will power off the outdoor control and will open the outdoor unit contactor, which interrupts power to the inverter and then re-apply power. Inverter alarms 12 to 14 and 53 do not count towards this lock out condition.
E 427	21	2 flashes	1 flash	Service Soon / Service Urgent	The inverter has detected a DC peak fault condition.	If condition (55A or higher) is detected, outdoor unit will stop (compressor and fan). Antishort cycle is initiated. If peak current (55A or higher) occurs 10 times within an hour, system will lock out. Indicates high pressure, condenser fan failure, locked compressor rotor or overcharge. To clear, disconnect power to the indoor unit (24VAC power source to the outdoor control) which will power off the outdoor control and will open the outdoor unit contactor, which interrupts power to the inverter and then re-apply power.
E 428	22	2 flashes	2 flashes	Service Soon / Service Urgent	The inverter has detected a high main input current condition	If condition is detected, outdoor unit will stop (compressor and fan). Antishort cycle is initiated. If condition occurs 5 times within an hour, system will lock out. Indicates high pressure, condenser fan failure or overcharge. To clear, disconnect power to the indoor unit (24VAC power source to the outdoor control) which will power off the outdoor control and will open the outdoor unit contactor, which interrupts power to the inverter and then re-apply power.
E 429	23	2 flashes	3 flashes	Service Soon / Service Urgent	On a call for compressor operation, if DC link power in inverter does not rise above 180 VDC for 2 and 3 ton models, 250 VDC for 4 and 5 ton models, within 30 seconds, the control will display a moderate code. If condition is detected, outdoor unit will stop (Compressor and fan). Antishort cycles is initiated. If condition occurs 10 times within a 60 minute rolling time period, system will lock out and display a critical code.	**Issues**: (1) If DC link power in inverter does not rise above 180 VDC for 2- and 3-ton models, 250 VDC for 4- and 5-ton models, within 30 seconds, the outdoor control will display a moderate code. (2) Capacitors on inverter do not properly charge. **Corrective Actions:** (1) Check for proper main power to outdoor unit and for any loose electrical connections.

TABLE 20. Outdoor Control 7-Segment Display Alert Codes and Inverter LED Flash Codes

NOTE - System fault and lockout codes take precedence over system status codes (cooling, heating operating percentages or defrost/dehumidification). Only the latest active fault or lockout codes are displayed (if present). If no fault or lockout codes are active, then system status codes are displayed. Alert codes are also displayed on the S30 thermostat.

Alert Codes	Inverter Code	Inverter LED Flash Code (number of flashes)		Priority	Alarm Description	Possible Causes and Clearing Alarm
		Red LED	Green LED			
E 430	26	2 flashes	6 flashes	Service Soon / Service Urgent	Compressor start failure.	If condition is detected, outdoor unit will stop (compressor and fan). Antishort cycle is initiated. If condition occurs 10 times within an hour, system will lock out. Indicates poor connection at compressor harness, improper winding resistance, locked compressor rotor, or flooded compressor. To clear, disconnect power to the indoor unit (24VAC power source to the outdoor control) which will power off the outdoor control and will open the outdoor unit contactor, which interrupts power to the inverter and then re-apply power.
E 431	27	2 flashes	7 flashes	Service Soon / Service Urgent	Error occurs when PFC detects an over-current condition of 100A, the control will display a moderate code. If condition is detected, outdoor unit will stop (Compressor and fan). Anti-short cycle is initiated. Inverter is unavailable to communicate with the outdoor control for 3 minutes. If condition occurs 10 times within a 60 minute rolling time period, system will lock out and display a critical code.	**Issues**: (1) Indicates power interruption, brownout, poor electrical connection or loose inverter input wire. (2) System testing was set up and code was generated when the reversing valve is de-energized coming out of defrost (code appears with or without 30 compressor delay). **Corrective Actions:** (1) Check for proper main power to outdoor unit and for any loose electrical connections.
E 432	28	2 flashes	8 flashes	Service Soon / Service Urgent	The inverter has detected a DC link high voltage condition.	Error occurs when the DC link capacitor voltage is greater than 480VDC. If condition is detected, outdoor unit will stop (compressor and fan). Antishort cycle is initiated. If condition occurs 10 times within an hour, system will lock out. System will stop. To clear, disconnect power to the indoor unit (24VAC power source to the outdoor control) which will power off the outdoor control and will open the outdoor unit contactor, which interrupts power to the inverter and then re-apply power.
E 433	29	2 flashes	9 flashes	Service Soon / Service Urgent	The inverter has detected a compressor over-current condition	Error occurs when compressor peak phase current is greater than 28A. Inverter will issue code 14 first and slow down to try to reduce the current. If the current remains high, outdoor unit will stop (compressor and fan). Antishort cycle is initiated. If condition occurs 5 times within an hour, system will lock out. To clear, disconnect power to the indoor unit (24VAC power source to the outdoor control) which will power off the outdoor control and will open the outdoor unit contactor, which interrupts power to the inverter and then re-apply power.

TABLE 20. Outdoor Control 7-Segment Display Alert Codes and Inverter LED Flash Codes

NOTE - System fault and lockout codes take precedence over system status codes (cooling, heating operating percentages or defrost/dehumidification). Only the latest active fault or lockout codes are displayed (if present). If no fault or lockout codes are active, then system status codes are displayed. Alert codes are also displayed on the S30 thermostat.

Alert Codes	Inverter Code	Inverter LED Flash Code (number of flashes)		Priority	Alarm Description	Possible Causes and Clearing Alarm
		Red LED	Green LED			
E 434	53	5 flashes	3 flashes	Service Soon / Service Urgent	Outdoor control has lost communications with the inverter for greater than 3 minutes. Outdoor unit will stop all compressor demand. Outdoor control will attempt to establish communication multiple times and will automatically clear when the error clears. Unit will lock out after 60 minutes if communication is not established and will display a critical error code.	**Issues**: (1) Outdoor disconnect is off or outdoor power is off, when indoor power is on (source for 24VAC) (2) Loose electrical power connections (3) Interruption of main power to the inverter (4) Generator powers indoor unit, but not the outdoor unit. **Corrective Actions:** (1) To reset, cycle the indoor power off (source of 24VAC to outdoor unit) and back on. This will de-energize outdoor control and inverter by cycling the contactor. (2) Make sure the disconnect is on (3) Check electrical power supply connections (4) Check for proper main 230V power supply
E 435	60	6 flashes	OFF	Service Soon / Service Urgent	Inverter internal error.	When this error occurs, the outdoor control will cycle power to the inverter by opening the contactor for 2 minutes. Check that the EEPROM is properly seated. After power is cycled to the inverter 3 times, the outdoor unit is locked out.
E 436	62	6 flashes	2 flashes	Service Soon / Service Urgent	Inverter heat sink temperature exceeded limit. Occurs when the heat sink temperature exceeds the inverter limit. Inverter issues code 13 first, then slows down to allow the heat sink to cool. If temperature remains high, outdoor unit stops (compressor and fan). Anti-short cycle is initiated. If condition occurs 5 times within an hour, system is locked out. To clear, disconnect power to the indoor unit (24VAC power source to the outdoor control) which will power off the outdoor control and will open the outdoor unit contactor, which interrupts power to the inverter and then re-apply power.	**Issue**: Feedback from supplier tear down of inverter indicates that the screws that hold the inverter to the inverter board were loose causing poor contact between these two components. **Corrective Action:** Tighten screws that hold the heat sink to the inverter control board. **NOTE**: Wait five minutes to all capacitor to discharge before checking screws.
E 437	65	6 flashes	5 flashes	Service Soon / Service Urgent	Heat sink temperature sensor fault has occurred (temperature less than 4 ºF or greater than 264ºF after 10 minutes of operation).	This occurs when the temperature sensor detects a temperature less than 0.4ºF or greater than 264ºF after 10 minutes of operation. If condition is detected, outdoor unit will stop (compressor and fan). Antishort cycle is initiated. If condition occurs 5 times within an hour, system will lock out. To clear, disconnect power to the indoor unit (24VAC power source to the outdoor control) which will power off the outdoor control and will open the outdoor unit contactor, which interrupts power to the inverter and then re-apply power.

TABLE 20. Outdoor Control 7-Segment Display Alert Codes and Inverter LED Flash Codes

NOTE - System fault and lockout codes take precedence over system status codes (cooling, heating operating percentages or defrost/dehumidification). Only the latest active fault or lockout codes are displayed (if present). If no fault or lockout codes are active, then system status codes are displayed. Alert codes are also displayed on the S30 thermostat.

Alert Codes	Inverter Code	Inverter LED Flash Code (number of flashes)		Priority	Alarm Description	Possible Causes and Clearing Alarm
		Red LED	Green LED			
E 438	73	7 flashes	3 flashes	Service Soon / Service Urgent	The inverter has detected a PFC over current condition. This would be caused by a high load condition, high pressure, or outdoor fan failure. Outdoor control will display the code when the inverter has the error. After 3 minutes, the inverter will reset and the compressor will turn on again. If it happens 10 times within a 60 minute rolling time period, the OD control will lock out operation of the outdoor unit and display a critical code.	**Issue**: Possible issue is system running at high pressures. Check for high pressure trips or other alert codes in room thermostat and outdoor control. To clear, disconnect power to the indoor unit (24VAC power source to the outdoor control) which will power off the outdoor control and will open the outdoor unit contactor, which interrupts power to the inverter and then re-apply power.
E 439	12	1 flash	2 flashes	Information Only - Dealer	Compressor slowdown due to high input current.	This error code is primarily for informational purposes as the inverter controls the compressor to operate within design parameters. Typically the inverter will make a minor speed reduction of 4 Hz (approximately a 5-6% speed reduction) for a brief period of time and to reduce the input current and will then resume normal operation.
E 440	13	1 flash	3 flashes	Information Only - Dealer	Heat sink temperature is approaching limit. The compressor speed automatically slows to reduce heat sink temperature. The control sets indoor CFM and outdoor RPM to values according to demand percentage rather than the actual Hz. Alarm is automatically cleared.	This error code is primarily for informational purposes as the inverter controls the compressor speed to operate within design parameters. Typically the inverter will make a minor speed reduction of 4 Hz (approximately a 5-6% speed reduction) for a brief period of time and to reduce the heat sink temperature and will then resume normal operation. This may occur at high outdoor temperatures (above 110ºF) for brief periods of time (3 – 4 minutes) and is normal and expected operation of the inverter controlling the compressor safely within design parameters. The inverter finned aluminum heat sink is located on the back side of the inverter in the condenser air stream. f the alert code 440 occur frequently, especially at lower outdoor temperatures, check the heat sink for debris that may reduce heat transfer or possible obstructions that may impact air flow across the heat sink. The inverter will begin to briefly reduce the compressor speed when the heat sink temperature rises above 185ºF and will allow the inverter to resume the requested compressor demand speed once the inverter heat sink reaches 176ºF. The heat sink temperature, compressor speed in Hertz & the Inverter Compressor Speed Reduction status (“On” or “Off ”) notification can be viewed under the outdoor unit Diagnostics section of the thermostat dealer control center on units installed with an S30 thermostat.

TABLE 20. Outdoor Control 7-Segment Display Alert Codes and Inverter LED Flash Codes

NOTE - System fault and lockout codes take precedence over system status codes (cooling, heating operating percentages or defrost/dehumidification). Only the latest active fault or lockout codes are displayed (if present). If no fault or lockout codes are active, then system status codes are displayed. Alert codes are also displayed on the S30 thermostat.

Alert Codes	Inverter Code	Inverter LED Flash Code (number of flashes)		Priority	Alarm Description	Possible Causes and Clearing Alarm
		Red LED	Green LED			
E 441	14	1 flash	4 flashes	Information Only - Dealer	Compressor slowdown due to high compressor current. Compressor current is approaching limit. The compressor speed automatically slows. The control sets indoor CFM and outdoor RPM to values according to demand percentage rather than the actual Hz. Alarm is automatically cleared..	This error code is primarily for informational purposes as the inverter controls the compressor to operate within design parameters. Alert code 441 typically occurs at startup as the compressor as the currently increases rapidly during startup. The inverter will reduce the compressor speed by 4 hz and slow the compressor ramp up speed to the requested compressor demand (capacity). This is normal and expected operation of the inverter to control the compressor within design parameters. In most cases the alert code 441 does not require any additional service or diagnostic procedures. E441 may also occur if the system is operating at high pressures. This error code is primarily for informational purposes as the inverter controls the compressor to operate within design parameters. Alert code 441 typically occurs at startup as the compressor as the currently increases rapidly during startup. The inverter will reduce the compressor speed by 4 hz and slow the compressor ramp up speed to the requested compressor demand (capacity). This is normal and expected operation of the inverter to control the compressor within design parameters. In most cases the alert code 441 does not require any additional service or diagnostic procedures. E441 may also occur if the system is operating at high pressures.

System Refrigerant

⚠ IMPORTANT

The system must be operating at full capacity during charging. Using the Charge Mode Jumper on the outdoor control ensures the unit is running at 100% capacity. Confirm outdoor unit running capacity.

This section outlines the procedures to:

1 - Connect a gauge set for testing and charging as illustrated in figure 41.

2 - Check and adjust indoor airflow as described in figure 42.

3 - Add or remove refrigerant using the weigh-in method shown in figure 43.

4 - Verify the charge using the subcooling method described in figure 44.

IMPORTANT: Unit must be operating at 100% capacity to be charged properly.

ADDING OR REMOVING REFRIGERANT

This system uses HFC-410A refrigerant which operates at much higher pressures than HCFC-22.

INDOOR AIRFLOW CHECK

Check airflow using the Delta-T (DT) process using the illustration in figure 50.

The diagnostic screen on the S30 thermostat displays the indoor CFMs on systems installed with the S30 communicating thermostat.

On systems installed with the S30 thermostat, the Cooling - Maximum Rate Test located in the Test section of the Dealer Control Center of the thermostat or the Lennox Dealer Setup App may be used to operate the unit at maximum capacity during charging.

CHARGE SYSTEM AT 100% CAPACITY

System charging must be performed with the unit operating at maximum cooling capacity (100% capacity). The unit can be operated at maximum capacity by entering the test mode at the S30 thermostat or by using the Lennox Dealer Setup App. The S30 Test Mode can be selected by going to Menu>Advanced Settings> View Dealer Control Center> Test and then Cooling - Maximum Rate Test - Maximum Rate Test. The seven-segment display on the outdoor control will show outdoor unit running capacity.

GAUGE SET

CONNECTIONS FOR TESTING AND CHARGING

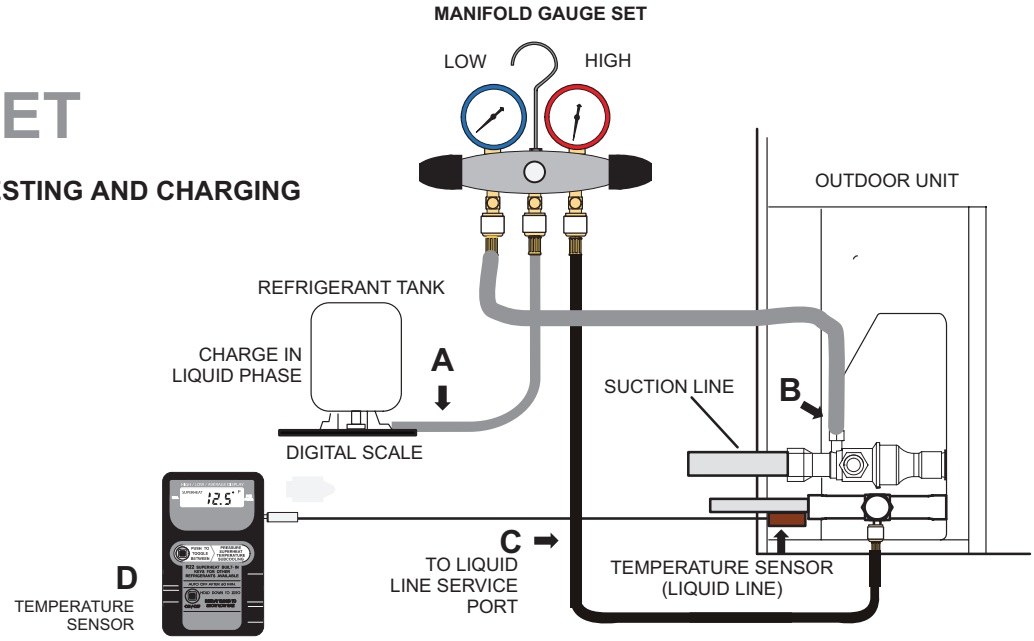

A. CLOSE MANIFOLD GAUGE SET VALVES AND CONNECT THE CENTER HOSE TO A CYLINDER OF HFC-410A SET FOR LIQUID PHASE CHARGING.

B. CONNECT THE MANIFOLD GAUGE SET'S LOW PRESSURE SIDE TO THE SUCTION LINE SERVICE PORT.

C. CONNECT THE MANIFOLD GAUGE SET'S HIGH PRESSURE SIDE TO THE LIQUID LINE SERVICE PORT.

D. POSITION TEMPERATURE SENSOR ON LIQUID LINE NEAR LIQUID LINE SERVICE PORT.

FIGURE 41. Gauge Set Connections

AIRFLOW

INDOOR COIL

TEMPERATURE OF AIR ENTERING INDOOR COIL ºF

DRY-BULB	DT													
80	24	24	24	23	23	22	22	22	20	19	18	17	16	15
78	23	23	23	22	22	21	21	20	19	18	17	16	15	14
76	22	22	22	21	21	20	19	19	18	17	16	15	14	13
74	21	21	21	20	19	19	18	17	16	16	15	14	13	12
72	20	20	19	18	17	17	16	15	15	14	13	12	11	10
70	19	19	18	18	17	17	16	15	15	14	13	12	11	10
WET-BULB ºF	**57**	**58**	**59**	**60**	**61**	**62**	**63**	**64**	**65**	**66**	**67**	**68**	**69**	**70**

A

B

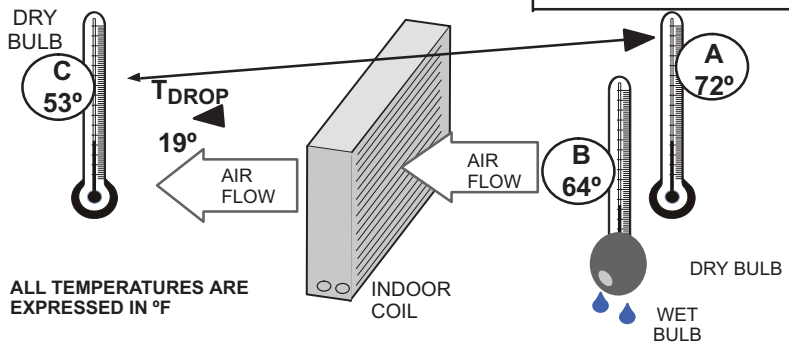

ALL TEMPERATURES ARE EXPRESSED IN ºF

1. DETERMINE THE DESIRED DT — MEASURE ENTERING AIR TEMPERATURE USING DRY BULB (**A**) AND WET BULB (**B**). **DT** IS THE INTERSECTING VALUE OF **A** AND **B** IN THE TABLE (SEE TRIANGLE).
2. **FIND TEMPERATURE DROP ACROSS COIL** — MEASURE THE DRY BULB AIR TEMPERATURE ENTERING AND LEAVING THE COIL (**A** AND **C**). TEMPERATURE DROP FORMULA: (T_{DROP}) = **A** MINUS **C**.
3. DETERMINE IF FAN NEEDS ADJUSTMENT — IF THE DIFFERENCE BETWEEN THE MEASURED T_{DROP} AND THE DESIRED **DT** (T_{DROP}–**DT**) IS WITHIN ±3º, NO ADJUSTMENT IS NEEDED. SEE EXAMPLE AT LEFT:
4. **ADJUST THE FAN SPEED** — SEE INDOOR UNIT INSTRUCTIONS TO INCREASE/DECREASE FAN SPEED.

NOTE - CHANGING AIR FLOW AFFECTS ALL TEMPERATURES; RECHECK TEMPERATURES TO CONFIRM THAT THE TEMPERATURE DROP AND DT ARE WITHIN ±3º.

ASSUME **DT** = 15 AND **A** TEMP. = 72º, BELOW **C** TEMPERATURES REQUIRE ACTION:

C º	T_{DROP}	–	DT	=	ºF	*ACTION*
53º	19	–	15	=	4	*INCREASE THE AIRFLOW*
58º	14	–	15	=	-1	*(WITHIN ±3º RANGE) NO CHANGE*
62º	10	–	15	=	-5	*DECREASE THE AIRFLOW*

FIGURE 42. Checking Indoor Airflow over Evaporator Coil using Delta-T Chart

Use the WEIGH-IN method for adding initial refrigerant charge, and then use SUBCOOLING method for for verifying refrigerant charge.

WEIGH-IN CHARGING METHOD

64ºF (17.7ºC) and Below

Amount specified on nameplate _____ ± Adjust amount for variation in line set length and liquid line diameter using table below. _____ = Total charge _____

Liquid Line Set Diameter	HFC-410A (ounces per foot)
5/16”	0.40
3/8”	0.60
1/2”	1.00

NOTE - Insulate liquid line when it is routed through areas where the surrounding ambient temperature could become higher than the temperature of the liquid line or when pressure drop is equal to or greater than 20 psig.

NOTE - The nameplate is shown for illustration purposes only. Go to actual nameplate on outdoor unit for charge information.

Charging Formula for Liquid Line Charge Adjustments

[(Line set oz./ft. x total length) - (factory charge for line set)] = charge adjustment

Example: Units are factory-charged for 15 feet (4.6 meters) of 3/8" line set. Factory charge for 3/8" is 0.60 oz/ft x 15 = 9.0 ounces.

FIGURE 43. Using HFC-410A Weigh-In Method

SUBCOOLING CHARGING METHOD

*(All charging **MUST** be performed while system is operating either at maximum speed or 100% demand.)*

1. THE DIAGNOSTIC SCREEN ON THE THERMOSTAT OR OUTDOOR CONTROL 7-SEGMENT DISPLAY WILL SHOW INDOOR AND OUTDOOR MOTOR CFMS OR RPMS.
2. MEASURE OUTDOOR AMBIENT TEMPERATURE.
3. CONNECT GAUGE SET.
4. CHECK LIQUID AND VAPOR LINE PRESSURES. COMPARE PRESSURES WITH COOLING MODE NORMAL OPERATING PRESSURES IN THE APPLICABLE CHARGING STICKER, NORMAL OPERATING PRESSURES AT MAXIMUM CAPACITY.
   NOTE - THE REFERENCE TABLE IS A GENERAL GUIDE. EXPECT MINOR PRESSURE VARIATIONS. SIGNIFICANT DIFFERENCES MAY MEAN IMPROPER CHARGE OR OTHER SYSTEM PROBLEM.
5. SET THERMOSTAT FOR HEAT/COOL DEMAND, DEPENDING ON MODE BEING USED:

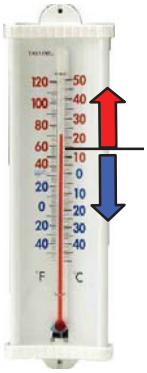

USE COOLING MODE

60ºF (15ºC)

USE HEATING MODE

USING COOLING MODE — WHEN THE OUTDOOR AMBIENT TEMPERATURE IS 60°F (15°C) AND ABOVE. TARGET SUBCOOLING VALUES (MAXIMUM / 100% CAPACITY) IN APPLICABLE CHARGING STICKER ARE BASED ON 70 TO 80°F (21-27°C) INDOOR RETURN AIR TEMPERATURE; IF NECESSARY, OPERATE HEATING TO REACH THAT TEMPERATURE RANGE; THEN SET THE INITIAL COOLING DEMAND AT MAXIMUM CAPACITY. THE PREFERRED METHOD IS TO USE THE “CHARGE MODE” JUMPER ON THE OUTDOOR CONTROL. SEE CHARGE MODE JUMPER SECTION ON PAGE 80. WHEN PRESSURES HAVE STABILIZED, CONTINUE WITH STEP 6.

6. READ THE LIQUID LINE TEMPERATURE; RECORD IN THE LIQº SPACE.
7. READ THE LIQUID LINE PRESSURE; THEN FIND ITS CORRESPONDING TEMPERATURE IN THE TEMPERATURE/ PRESSURE CHART LISTED IN THE APPLICABLE CHARGING STICKER AND RECORD IT IN THE SATº SPACE.
8. SUBTRACT LIQº TEMPERATURE FROM SATº TEMPERATURE TO DETERMINE SUBCOOLING; RECORD IT IN SCº SPACE.
9. COMPARE SCº RESULTS WITH APPLICABLE CHARGING STICKER, BEING SURE TO NOTE ANY ADDITIONAL CHARGE FOR LINE SET AND/OR MATCH-UP.
10. IF SUBCOOLING VALUE IS GREATER THAN SHOWN IN APPLICABLE CHARGING STICKER FOR THE APPLICABLE UNIT, REMOVE REFRIGERANT; IF LESS THAN SHOWN, ADD REFRIGERANT.
11. IF REFRIGERANT IS ADDED OR REMOVED, REPEAT STEPS 6 THROUGH 10 TO VERIFY CHARGE.
12. DISCONNECT GAUGE SET AND RE-INSTALL BOTH THE LIQUID AND SUCTION SERVICE VALVE CAPS.

SATº _____

LIQº – _____

SCº = _____

FIGURE 44. Using HFC-410A Subcooling Method - High Speed (High Capacity)

TABLE 21. HFC-410A Temperature (°F) - Pressure (Psig)

°F	Psig	°F	Psig	°F	Psig	°F	Psig	°F	Psig	°F	Psig	°F	Psig	°F	Psig
32	100.8	48	137.1	63	178.5	79	231.6	94	290.8	110	365.0	125	445.9	141	545.6
33	102.9	49	139.6	64	181.6	80	235.3	95	295.1	111	370.0	126	451.8	142	552.3
34	105.0	50	142.2	65	184.3	81	239.0	96	299.4	112	375.1	127	457.6	143	559.1
35	107.1	51	144.8	66	187.7	82	242.7	97	303.8	113	380.2	128	463.5	144	565.9
36	109.2	52	147.4	67	190.9	83	246.5	98	308.2	114	385.4	129	469.5	145	572.8
37	111.4	53	150.1	68	194.1	84	250.3	99	312.7	115	390.7	130	475.6	146	579.8
38	113.6	54	152.8	69	197.3	85	254.1	100	317.2	116	396.0	131	481.6	147	586.8
39	115.8	55	155.5	70	200.6	86	258.0	101	321.8	117	401.3	132	487.8	148	593.8
40	118.0	56	158.2	71	203.9	87	262.0	102	326.4	118	406.7	133	494.0	149	601.0
41	120.3	57	161.0	72	207.2	88	266.0	103	331.0	119	412.2	134	500.2	150	608.1
42	122.6	58	163.9	73	210.6	89	270.0	104	335.7	120	417.7	135	506.5	151	615.4
43	125.0	59	166.7	74	214.0	90	274.1	105	340.5	121	423.2	136	512.9	152	622.7
44	127.3	60	169.6	75	217.4	91	278.2	106	345.3	122	428.8	137	519.3	153	630.1
45	129.7	61	172.6	76	220.9	92	282.3	107	350.1	123	434.5	138	525.8	154	637.5
46	132.2	62	175.4	77	224.4	93	286.5	108	355.0	124	440.2	139	532.4	155	645.0
47	134.6			78	228.0			109	360.0			140	539.0		

FIGURE 45. SL28XCV Charging Label

SL28XCV – HFC-410A CHARGING PROCEDURE

FOR COMPLETE CHARGING DETAILS, REFER TO THE OUTDOOR UNIT INSTALLATION AND SERVICE PROCEDURE

IMPORTANT !

Unit must be put in Test Mode so charging occurs with system operating at 100% capacity. Seven-segment display on outdoor control will show outdoor unit running capacity.

AIRFLOW CHECK - Both airflow and refrigerant charge must be monitored for a proper system set-up. It may be necessary to alternately check and adjust the airflow and the refrigerant charge.

NOTE - Be sure that filters and indoor and outdoor coils are clean before testing.

The unit is factory-charged with HFC-410A refrigerant in the amount indicated on the unit rating plate. This charge is based on a matching indoor coil and outdoor coil using a 15 foot (4.6 m) line set. The following charging procedure is intended as a general guide. It is intended for use on expansion valve systems only. For best results, indoor temperature should be between 70ºF (21ºC) and 80ºF (27ºC) and monitor system pressures while charging. Charging should be done with unit operating in the **cooling mode.**

1 - Connect the manifold gauge set to the service valves. Connect the low pressure gauge to vapor valve service port and the high pressure gauge to liquid valve service port. Connect the center manifold hose to an upright cylinder of HFC-410A. Close manifold gauge set valves.

2 - Set the room thermostat to call for heat. This will create the necessary load to properly charge the system in the cooling cycle.

3 - Use a digital thermometer to record the outdoor ambient temperature.

4 - When the heating demand has been satisfied, switch the thermostat to cooling mode with a set point of 68°F (20°C). When pressures have stabilized, use a digital thermometer to record the liquid line temperature.

5 - The outdoor temperature will determine which charging method to use. Proceed with the appropriate charging procedure list below.

Using the Weigh-in Method—*Outdoor Temperature 64ºF (17.7ºC) and below.*

If the system is void of refrigerant, or if the outdoor ambient temperature is 64ºF (17.7ºC) or below, the refrigerant charge should be weighed into the unit. Do this after any leaks have been repaired.

NOTE: See installation instruction for adding charge for longer line sets.

1 - Recover the refrigerant from the unit.

2 - Perform a leak check and evacuate as outlined in the installation instruction.

3 - Weigh in the unit nameplate charge.

If weighing facilities are not available or if you are charging the unit during warm weather, follow one of the other procedures outlined as follows.

Subcooling Method—*Outdoor Temperature 65ºF (18.3ºC) and above.*

Use the subcooling method to charge the unit. It may be necessary to restrict the air flow through the outdoor coil to achieve pressures in the 325-375 psig (2240-2585 kPa) range. These higher pressures are necessary for checking the charge. Block equal sections of air intake panels and move obstructions sideways until the liquid pressure is in the 325-375 psig (2240-2585 kPa) range.

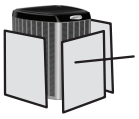

1 - Block coil one side at a time with cardboard/plastic until proper testing pressures are reached.

2 - With the manifold gauge hose still on the liquid service port and the unit operating stably, use a digital thermometer to record the liquid line temperature.

3 - At the same time, record the liquid line pressure reading.

4 - Use a temperature/pressure chart for HFC-410A to determine the saturation temperature for the liquid line pressure reading.

5 - Subtract the liquid line temperature from the saturation temperature (according to the chart) to determine subcooling **(Saturation temperature - Liquid line temperature = Subcooling Value).**

6 - Compare the subcooling value with those in table 1. If subcooling is greater than shown, recover some refrigerant. If subcooling is less than shown, add some refrigerant.

Using the Approach Method—*Outdoor Temperature 65ºF (18.3ºC) and above.* Monitor system pressures while charging.

1 - Record outdoor ambient temperature using a digital thermometer.

2 - Attach high pressure gauge set and operate unit for several minutes to allow system pressures to stabilize.

3 - Compare stabilized pressures with those provided in table 3, Normal Operating Pressures. Minor variations in these pressures may be expected due to differences in installations. Significant differences could mean that the system is not properly charged or that a problem exists with some component in the system. Pressures higher than those listed indicate that the system is overcharged. Pressures lower than those listed indicate that the system is undercharged. Verify adjusted charge using the approach method.

4 - Use the same digital thermometer used to check outdoor ambient temperature to check liquid line temperature. Verify the unit charge using the approach method.

5 - The difference between the liquid and ambient temperatures should match values given in table 2. If the values don't agree with the those in table 2, add refrigerant to lower the approach temperature or recover refrigerant from the system to increase the approach temperature.

Charging Temperatures and Pressures

SL28XCV	-024	-036	-048	-060
Table 1 – Subcooling Values *Saturation Temperature minus Liquid Line Temperature °F ± 1°F*				
Temp. °F	8	6	10	11
Table 2 – Approach Values *Liquid Line Temperature minus Outdoor Ambient Temperature °F ± 1°F*				
Temp. °F	0.5	4	4	4
Table 3 – Normal Operating Pressures (Liquid ±10 and Suction ±5 psig)				
Air Temp.*	The values below are typical pressures; indoor evaporator match up, indoor air quantity, and evaporator load will cause the pressures to vary			
Maximum Speed	**Suction/ Liquid Line Pressures**	**Suction/ Liquid Line Pressures**	**Suction/ Liquid Line Pressures**	**Suction/ Liquid Line Pressures**
65°	143/214	131/222	137/230	124/233
70°	145/230	135/237	138/247	126/251
75°	146/249	137/256	140/267	129/270
80°	147/268	138/276	141/288	131/291
85°	148/289	139/297	142/310	133/313
90°	149/311	140/319	142/334	135/336
95°	150/333	141/342	144/357	136/361
100°	151/358	142/366	145/383	138/387
105°	153/381	144/390	147/409	139/413
110°	154/407	145/418	148/435	140/442
115°	155/433	146/444	150/465	141/472

**Temperature of air entering outdoor coil.*

0520
580985-01

SL28XCV Advanced Diagnostics

The SL28XCV air conditioner has factory installed liquid pressure transducers, liquid temperature sensors, suction pressure transducers and suction pressure temperature sensors that support advanced systems diagnostic information. The advanced diagnostic information is available at the S30 under the Dealer Dashboard, in the Diagnostic section of the Lennox Dealer Setup App and remotely on LennoxPros Service Dashboard.

The refrigerant pressures and temperatures along with the liquid subcooling value and suction superheat are now part of the diagnostic information. The SL28XCV refrigerant pressures. Temperatures., superheat and subcooling can checked while at the jobsite without connecting manifold gauges to the system and remotely at the office using LennoxPros service dashboard.

The Lennox Dealer Setup App can be downloaded for free at the App Store for Apple smartphones and tablets or at the Google Play for Android smartphones and tablets.

Examples of the diagnostic information available on LennoxPros Service Dashboard and the Lennox Dealer Setup App are shown below.

Lennox Dealer Setup App

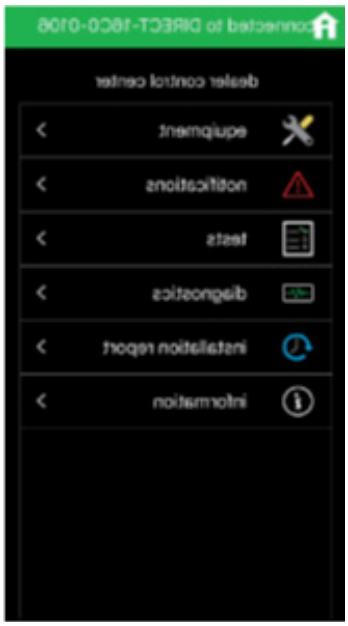

LennoxPros Service Dashboard

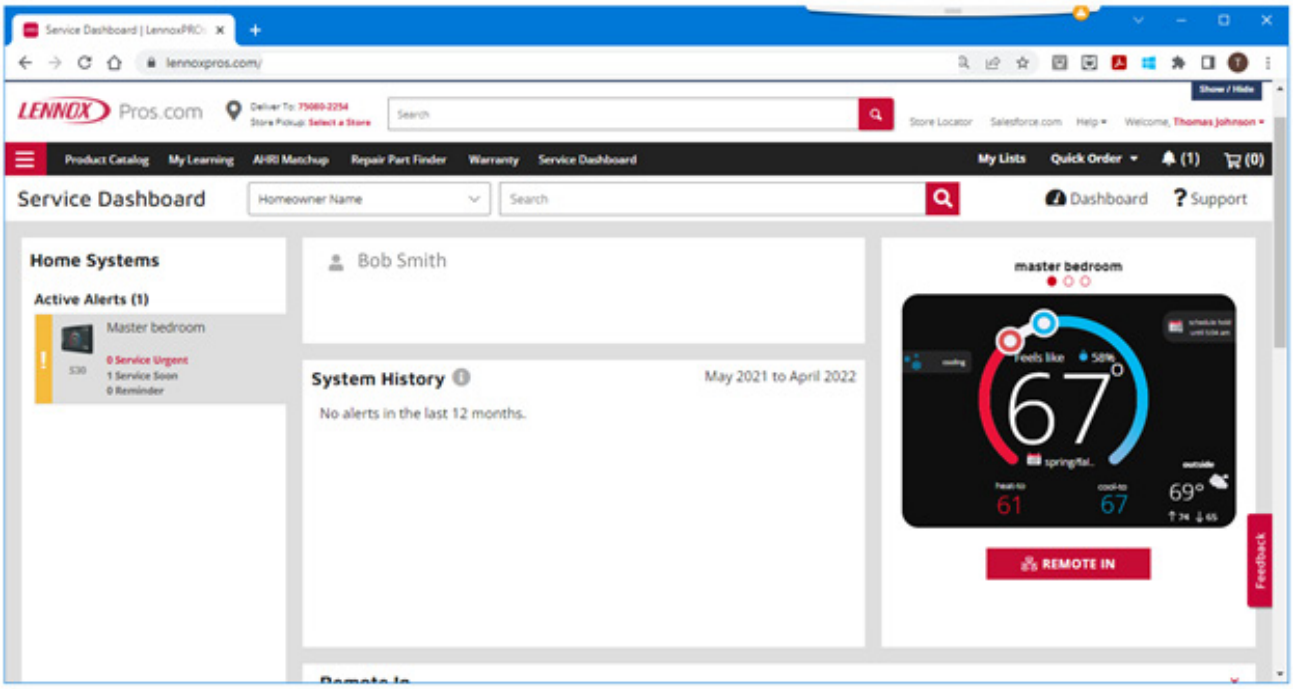

Remote In

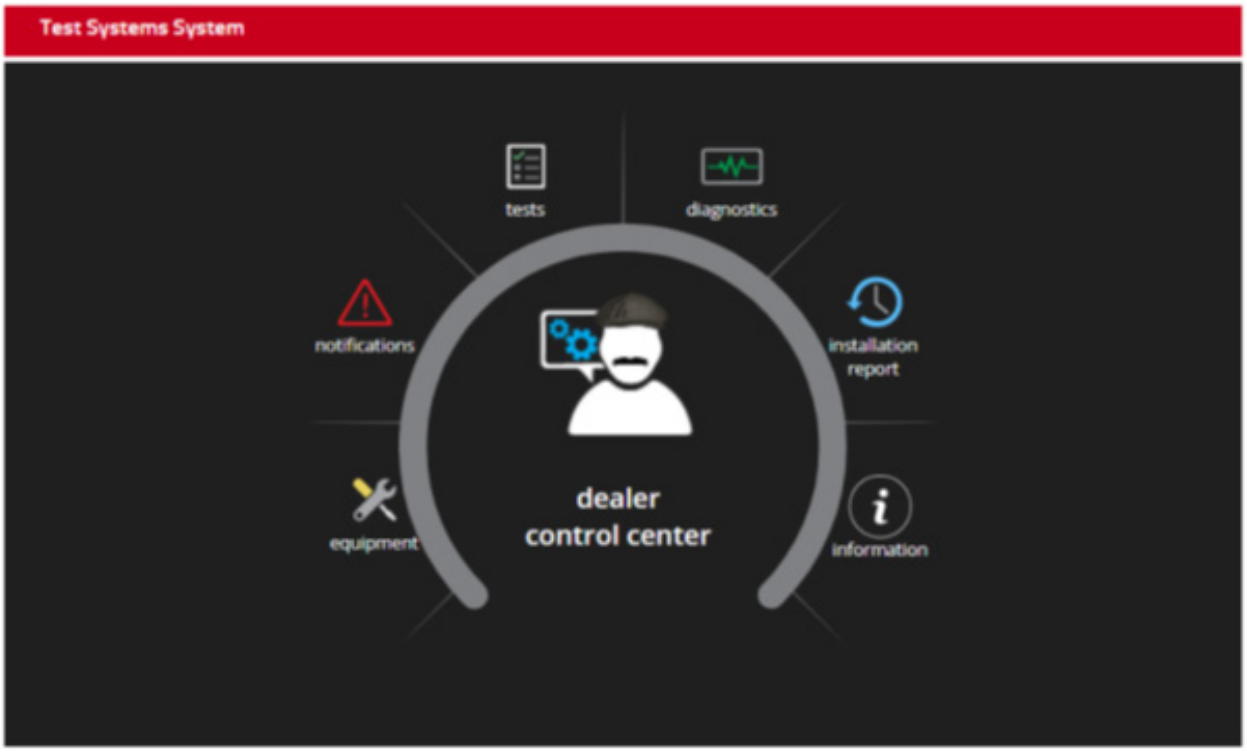

Test Systems System

diagnostics

diagnostic results

Air Conditioner

Comp. Short Cycle Delay Active	No
Cooling Rate	49.0 %
High Pressure Switch	Closed
Low Pressure Switch	Closed
Top Cap Switch Status	Closed
Liquid Line Temp	77.8 F
Ambient Temp	70.8 F
Compressor Active Alarm	0
Compressor Hz	25.0 Hz
Compressor Speed Reduction	Off
Heat Sink Temperature	78.8 F
Inverter Input Voltage	250.0 V
DC Link Voltage	339.0 V
Compressor Current	2.730 A
Subcooling	1.2 F
Liquid Line Pressure	223.6 PSI
Liquid Line Temp	75.4 F
Superheat	20.4 F
Suction Line Pressure	131.9 PSI
Suction Line Temp	65.9 F

stop diagnostics