KEY	DESCRIPTION
A3	CONTROL, BURNER 1
A55	CONTROL, MAIN BOARD LENNOX
B6	MOTOR, COMBUSTION AIR BLOWER
C3	CAPACITOR, COMB AIR BLOWER 1
E1	SPARK
FS1	SENSOR, FLAME
GV1	VALVE, GAS 1
HR6	HEATER, -50C LOW AMBIENT KIT
K13,-1	RELAY, COMBUSTION AIR BLOWER
K72,-1,2	RELAY, GAS 3
K125,-1	RELAY, HEAT SHUT OFF
S10	SWITCH, LIMIT PRIMARY GAS
S18	SWITCH, COMBUSTION AIR PROVE 1
S43	SWITCH, LOW GAS PRESSURE
S47	SWITCH FLAME ROLLOUT BURNER
S59	TSTAT, OPEN -20F, CLOSE 10F
S60	TSTAT, OPEN 20F, CLOSE -10F
S61	TSTAT, OPEN 50F, CLOSE 20F
T3	TRANSFORMER COMB AIR BWR 1

J/P	DESCRIPTION
19	COMBUSTION AIR BLOWER 1
21	COMBUSTION AIR BLOWER 2
228	VESTIBULE HEATER
229	VESTIBULE HEATER CONTROL 1
265D	CONTACTOR RELAY
266A	HEATING CONTROL STG 1
271A,B	HEATING SENSORS STG 1

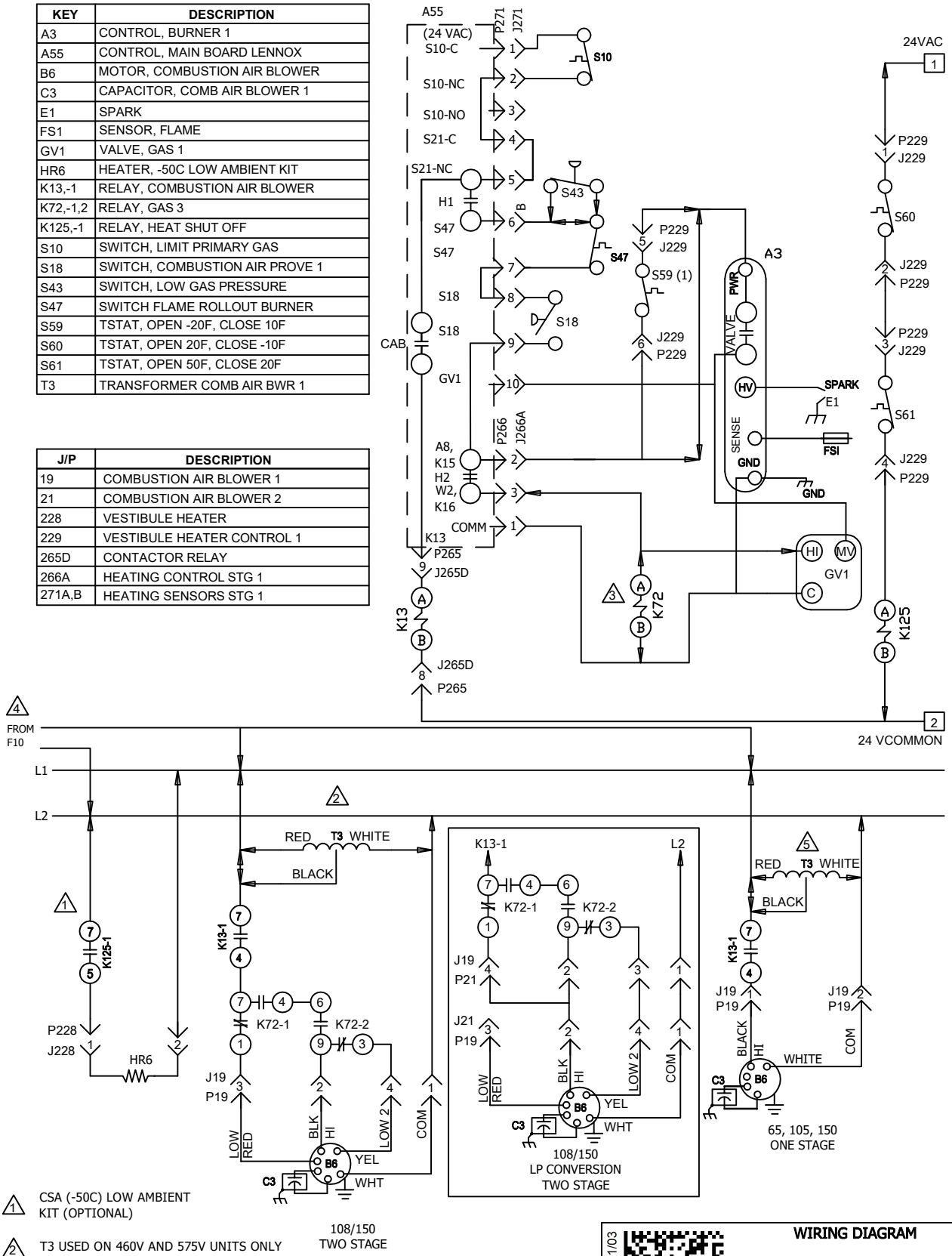

1. CSA (-50C) LOW AMBIENT KIT (OPTIONAL)
2. T3 USED ON 460V AND 575V UNITS ONLY
3. K72 AND GV1 2STG ARE USED ON TWO STAGE UNITS.
4. ONLY ON UNITS WITH SCCR OPTION
5. T3 USED ON 460V AND 575V UNITS

DENOTES OPTIONAL COMPONENTS

2021/03	WIRING DIAGRAM 537704-05	03/21
HEATING		
GAS HEAT, LGH 65 - 150		
SECTION A		REV. 1
Supersedes 537704-04	New Form No. 537704-05	