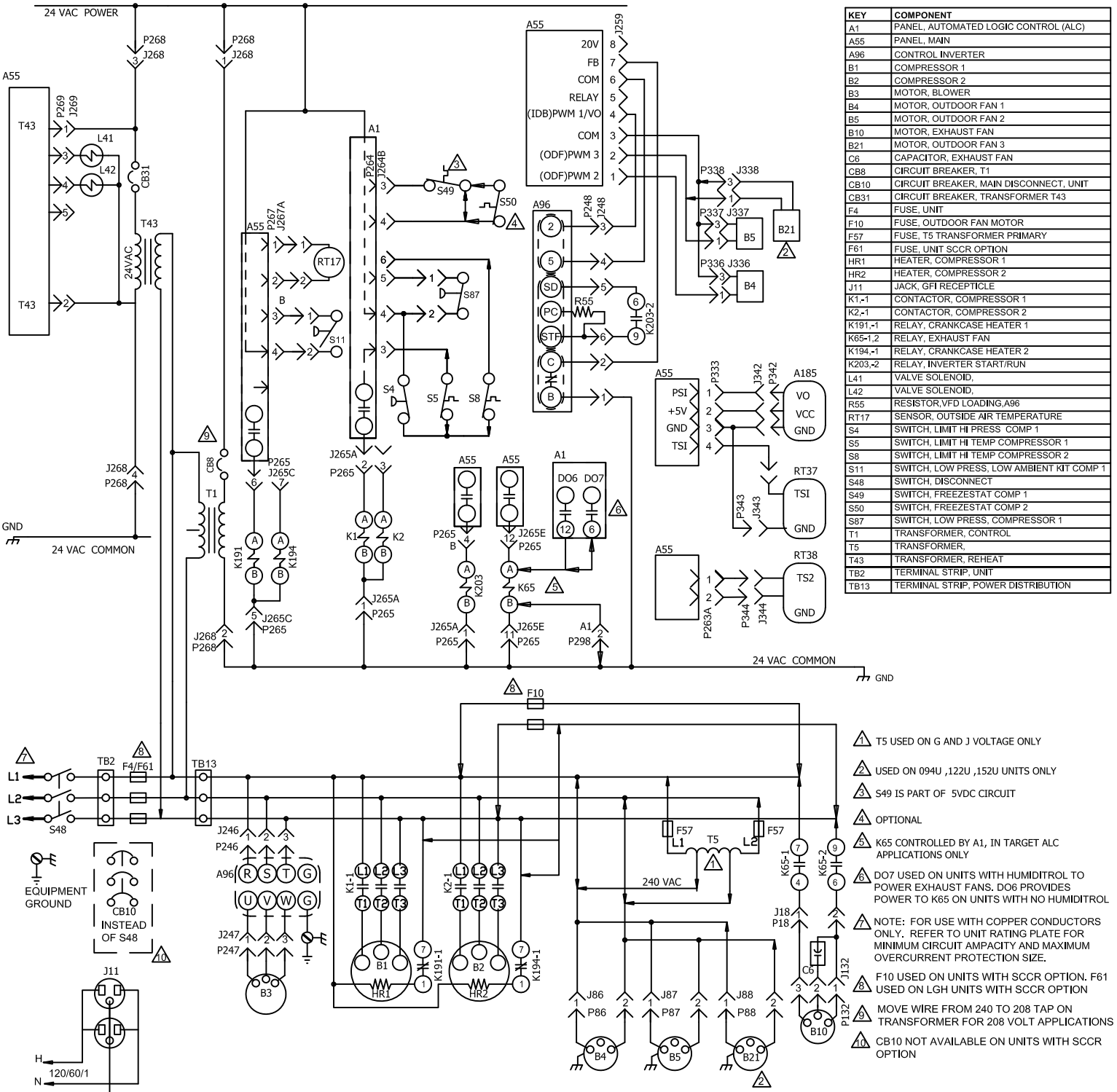

KEY	COMPONENT
A1	PANEL, AUTOMATED LOGIC CONTROL (ALC)
A55	PANEL, MAIN
A96	CONTROL INVERTER
B1	COMPRESSOR 1
B2	COMPRESSOR 2
B3	MOTOR, BLOWER
B4	MOTOR, OUTDOOR FAN 1
B5	MOTOR, OUTDOOR FAN 2
B10	MOTOR, EXHAUST FAN
B21	MOTOR, OUTDOOR FAN 3
C6	CAPACITOR, EXHAUST FAN
CB8	CIRCUIT BREAKER, T1
CB10	CIRCUIT BREAKER, MAIN DISCONNECT, UNIT
CB31	CIRCUIT BREAKER, TRANSFORMER T43
F4	FUSE, UNIT
F10	FUSE, OUTDOOR FAN MOTOR
F57	FUSE, T5 TRANSFORMER PRIMARY
F61	FUSE, UNIT SCCR OPTION
HR1	HEATER, COMPRESSOR 1
HR2	HEATER, COMPRESSOR 2
J11	JACK, GFI RECEPTICLE
K1,-1	CONTACTOR, COMPRESSOR 1
K2,-1	CONTACTOR, COMPRESSOR 2
K191,-1	RELAY, CRANKCASE HEATER 1
K65-1,2	RELAY, EXHAUST FAN
K194,-1	RELAY, CRANKCASE HEATER 2
K203,-2	RELAY, INVERTER START/RUN
L41	VALVE SOLENOID,
L42	VALVE SOLENOID,
R55	RESISTOR,VFD LOADING,A96
RT17	SENSOR, OUTSIDE AIR TEMPERATURE
S4	SWITCH, LIMIT HI PRESS COMP 1
S5	SWITCH, LIMIT HI TEMP COMPRESSOR 1
S8	SWITCH, LIMIT HI TEMP COMPRESSOR 2
S11	SWITCH, LOW PRESS, LOW AMBIENT KIT COMP 1
S48	SWITCH, DISCONNECT
S49	SWITCH, FREEZESTAT COMP 1
S50	SWITCH, FREEZESTAT COMP 2
S87	SWITCH, LOW PRESS, COMPRESSOR 1
T1	TRANSFORMER, CONTROL
T5	TRANSFORMER,
T43	TRANSFORMER, REHEAT
TB2	TERMINAL STRIP, UNIT
TB13	TERMINAL STRIP, POWER DISTRIBUTION

1. T5 USED ON G AND J VOLTAGE ONLY
2. USED ON 094U ,122U ,152U UNITS ONLY
3. S49 IS PART OF 5VDC CIRCUIT
4. OPTIONAL
5. K65 CONTROLLED BY A1, IN TARGET ALC APPLICATIONS ONLY
6. DO7 USED ON UNITS WITH HUMIDITROL TO POWER EXHAUST FANS. DO6 PROVIDES POWER TO K65 ON UNITS WITH NO HUMIDITROL
7. NOTE: FOR USE WITH COPPER CONDUCTORS ONLY. REFER TO UNIT RATING PLATE FOR MINIMUM CIRCUIT AMPACITY AND MAXIMUM OVERCURRENT PROTECTION SIZE.
8. F10 USED ON UNITS WITH SCCR OPTION. F61 USED ON LGH UNITS WITH SCCR OPTION
9. MOVE WIRE FROM 240 TO 208 TAP ON TRANSFORMER FOR 208 VOLT APPLICATIONS
10. CB10 NOT AVAILABLE ON UNITS WITH SCCR OPTION

J/P	JACK/PLUG DESCRIPTION
18	POWER, EXHAUST FAN
48	POWER TO INDOOR BLOWER
86	POWER, OUTDOOR FAN INTERFACE B4
87	POWER, OUTDOOR FAN INTERFACE B5
88	POWER, OUTDOOR FAN INTERFACE B21
132	POWER, EXHAUST FAN MOTOR
246	POWER TO VFD
247	POWER, VFD TO MOTOR
248	VFD CONTROL
263	HIGH AND LOW PRESSURE SWITCHES
264	BLOWER DECK
265	CONTACTORS AND RELAYS
267	OUTDOOR FAN AREA
268	TRANFORMER T1 POWER
269	TRANFORMER T43 POWER
298	IAQ INTERFACE

DENOTES OPTIONAL COMPONENTS
LINE VOLTAGE FIELD INSTALLED

2018/07	WIRING DIAGRAM 537616-04	07/18
COOLING -MSAV NO BYPASS		
(ULTRA) LCH/LGH - 092U, 094U, 120U, 122U, 152U - Y, G, J, M		
SECTION B		REV 0
Supersedes 537616-03	New Form No. 537616-04	