GAS FURNACES

ML196DFE

MERIT® SERIES

Downflow - Constant Torque Blower - 60Hz

RESIDENTIAL PRODUCT SPECIFICATIONS

Bulletin No. 210910
July 2026
Supersedes all previous versions

MERIT® SERIES

ENERGY STAR

QUALIFIED ONLY IN

U.S. SOUTH: AL, AZ, AR, CA, DC, DE, FL, GA, HI, KY, LA, MD, MS, NV, NM, NC, OK, SC, TN, TX, VA

AFUE - 96%
Input - 44,000 to 110,000 Btuh
Nominal Add-on Cooling - 1.5 to 5 Tons

MODEL NUMBER IDENTIFICATION

ML 1 96 DF 070 X E 36 B

Unit Type
ML = Merit® Series

Stages
1 = One-Stage

AFUE
96 = 96%

Configuration
DF = Downflow

Nominal Gas Heat Input
045 = 44,000 Btuh
070 = 66,000 Btuh
090 = 88,000 Btuh
110 = 110,000 Btuh

Low NOx
X = Units meet California Nitrogen Oxides Standard (40 ng/J)

Blower
E = High Efficiency Constant Torque Blower Motor

Nominal Add-On Cooling Capacity
36 = 1.5 - 3 tons
48 = 2.5 - 4 tons
60 = 3 - 5 tons

[1] **Cabinet Width**
B = 17-1/2 in.
C = 21 in.

[1] Downflow indoor coils with the same letter designation physically match the furnace **supply air opening**.

FEATURE HIGHLIGHTS

1. Lennox Duralok Plus™ Heat Exchanger
2. Secondary Heat Exchanger
3. Inshot Burners
4. Gas Control Valve
5. Combustion Air Inducer
6. SureLight® Integrated Furnace Control
7. Power Saver™ Constant Torque Blower
8. Insulated Cabinet
9. Safety Interlock Switch
10. Gas Piping And Electrical Inlets

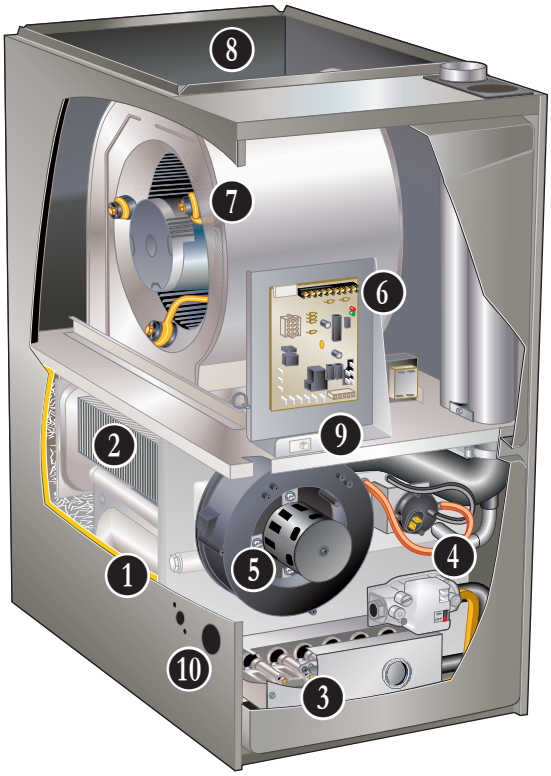

CONTENTS

Blower Data 21
Dimensions 15
- Furnace/Coil Combined Dimensions 17
- Optional Accessories 16
- Optional Accessories - Venting. 18
- Unit 15
Approvals And Warranty 3
Features 3
Gas Heat Accessories 10
High Altitude Derate 10
Installation Clearances 8
Model Number Identification. 1
Optional Accessories 9
Specifications 8
Vent Lengths 11
- Exhaust Or Intake 11
- Exhaust Using Ventilated Attic/Crawlspace Intake Air. 13
- Uninsulated Exhaust Pipe In Unconditioned Space 14

APPROVALS AND WARRANTY

APPROVALS

- AHRI Certified
- Tested and rated according to US DOE test procedures and FTC labeling regulations
- Approved by the California Energy Commission and meets California Nitrogen Oxides Standard (NOx) limits of 40 ng/J
- ENERGY STAR® units are certified only in the U.S. South in certain states and are designed to use less energy, help save money on utility bills, and help protect the environment
- ISO 9001 Registered Manufacturing Quality System
- Blower data from unit tests conducted in Lennox Laboratory air test chamber

NOTE - This furnace has not been CSA International design certified for installation in mobile homes, recreational vehicles, or outdoors.

California Only

- This furnace **does not meet** the South Coast Air Quality Management District (SCAQMD) Rule 1111 and San Joaquin Valley Air Pollution Control District (SJVAPCD) Rule 4905 NOx emission limit (14 ng/J) and cannot be installed within the SCAQMD, SJVAPCD and Bay Area
- Approved by the California Energy Commission and meets California Nitrogen Oxides Standard (NOx) limits of 40 ng/J

WARRANTY

- Duralok Plus™ Aluminized Steel Heat Exchanger:
  - Limited twenty year in residential applications
  - Limited ten years in non-residential applications
- All other covered components:
  - Limited five years in residential installations
  - Limited one year in non-residential installations

NOTE - Refer to Lennox® Basic Limited Warranty at www.Lennox.com for additional details.

FEATURES

APPLICATIONS

- Input capacities of 44,000, 66,000, 88,000 and 110,000 Btuh
- Energy efficiency (AFUE) - 96%
- Lennox add-on indoor coils, high-efficiency air cleaners and humidifiers can easily be added to furnace
- Shipped factory assembled with controls installed and wired
- Each unit factory test operated to ensure proper operation

HEATING SYSTEM

1 Lennox Duralok Plus™ Heat Exchanger Assembly

- Lennox developed heat exchanger assembly consists of primary heat exchanger and secondary condenser coil assembly
- Main multi-pass crimped seam design clamshell type
- Constructed of heavy-gauge, aluminized steel
- Designed for normal expansion and contraction with maximum efficiency and minimum resistance to air flow
- 2 Secondary heat exchanger condenser coil constructed of aluminum fins fitted to stainless steel tubes
- Coil is factory tested for leaks
- Condensate drain header box assembly located on front of coil
- Compact size permits low overall design of furnace cabinet
- Laboratory life cycle tested in excess of industry standards

Lennox Designed Header Box

- Header box on end of condenser coil collects flue condensate for disposal through condensate drains
- Drains are located on each side of the cabinet for easy field installation of condensate drain trap
- Only one drain is used, the other drain is sealed
- Condensate drain trap is included with the unit for field installation

Lennox Designed Flue Condensate Trap Assembly

- Field installed outside the conditioned air stream
- Assembly can be mounted on either side of cabinet in upflow applications
- Assembly is mounted below the cabinet in horizontal applications
- Can also be mounted remotely (up to 5 ft. away) from unit
- See Dimension Drawing and Installation Instructions
- 90° street elbow furnished for ease of drain trap installation
- Drain connection can be made with field provided PVC pipe or PVC coupling
- Drain cap on trap allows easy cleaning and winterizing

HEATING SYSTEM (continued)

3 Inshot Burners
- Aluminized steel inshot burners provide efficient, trouble-free operation
- Burner venturi mixes air and gas in correct proportion for proper combustion
- Burner assembly can be removed from the unit as a single component for ease of service

SureLight® Hot Surface Ignitor
- Tough, reliable, long-life, trouble-free performance
- Silicon nitride ignitor
- Cemented to steatite block for protection against current leakage
- Ignition leads are constructed of nickel plated copper and are enclosed in high temperature Teflon® insulation for dependable operation

4 Gas Control Valve
- 24 volt redundant combination gas control valve combines manual shut off switch (On-Off), automatic electric valve (dual) and gas pressure regulation into a compact combination control

5 Combustion Air Inducer
- Shaded pole heavy duty blower prepurges heat exchanger and safely vents flue products
- Operates only during heating cycle

Pressure Switch
- Proves Combustion Air Inducer operation before allowing gas valve to open

Limit Control
- Primary limit is accurately located on header box on all units
- Automatic reset

Flame Rollout Switches (2)
- Factory installed on the front of the burner box
- Switch provides protection from abnormal operating conditions
- Manual reset

Optional Accessories

High Altitude Orifice Kits
- Required on all units for proper operation at altitudes from 7501 to 10,000 ft.
- Kits are available for natural gas and LPG/propane

High Altitude Pressure Switch Kit
- Required for proper unit operation on installations above 4500 ft.

Natural Gas to LPG/Propane Conversion Kit
- Required for field changeover from natural gas to LPG/Propane

LPG/Propane to Natural Gas Conversion Kit
- Required for field changeover from LPG/Propane to natural gas

Muffler (US Only)
- Significantly reduces outdoor operating sound levels
- Two-inch diameter muffler is optional for all models
- Installed vertically in the exhaust piping
- See Optional Accessory Dimension Drawing

DIRECT VENT / NON-DIRECT VENT SEALED COMBUSTION SYSTEM

- Furnace features a “sealed combustion” system and can be installed in either Direct Vent or Non-Direct applications
- In Direct Vent applications, combustion air is supplied from outdoors and flue gases are discharged outdoors
- In Non-Direct Vent applications, combustion air is supplied from indoors and flue gases are discharged outdoors

NOTE - Lennox has approved the use of DuraVent® PolyPro® and Centrotherm InnoFlue® manufactured vent pipe and terminations as an alternative to PVC vent pipe. Must be ordered separately.
Tested and listed to the ULC S636 standard in Canada

- The polypropylene venting system must follow the uninsulated and unconditioned space vent lengths listed in the table on 14
- Refer to the Installation Instructions for additional details

Flue Coupling
- Assists with exhaust flue piping connection and servicing
- Includes flexible one 2-inch rubber coupling and two adjustable bands
- Approved for all Lennox 90% furnaces

DIRECT VENT / NON-DIRECT VENT SEALED COMBUSTION SYSTEM (continued)

Vent Termination Kits

- Facilitates installation of combustion air intake pipe and flue exhaust pipe
- Refer to venting table in this bulletin to determine pipe size needed and proper termination kit required
- See Optional Accessories table and dimension drawings

Concentric Termination Kit - Direct Vent Applications

- 2 or 3 inch kit contains concentric termination assembly, reducer bushing and 45° elbow
- 2 inch kit for -030-045-070 models contains an outdoor exhaust accelerator
- Kit requires single hole penetration of roof or wall for installation
- Roof Termination Flashing Kit is available for use with 2 inch Kits
- CSA certified

Flush-Mount Termination Kit

- Kit contains flush-mount termination, accelerator, mounting template and hardware
- Kit may be used with 2, 2-1/2 or 3 in. pipe

Wall Assembly Termination Kits

Close Couple (US Only) - Direct Vent Applications

- 2 or 3 inch kit consists of close-couple, side-by-side PVC piping with galvanized steel wall cover plate
- Seals and isolates intake and exhaust piping penetration of wall
- Piping spacing and length is sized for proper wall installations
- CSA certified

Close Couple WTK (Canada Only) - Direct Vent Applications

- 2 or 3 inch kit contains one insulated faceplate, one insulated exhaust pipe, elbow and fittings

NOTE - Maintain a maximum of 6 inches between the inlet and outlet openings in the installation of the pipes.

Roof Termination Flashing Kit

- For vertical venting through a roof
- 2 or 3 inch kit contains two neoprene rubber roof flashings
- Vent pipe and insulation not furnished
- Flashing Kit can also be used with Concentric Vent Termination Kits used in vertical venting rooftop applications

CONTROLS

6 SureLight® Integrated Furnace Control

- Contains all necessary controls and relays to operate furnace
- Combustion air inducer is operated by the integrated furnace control
- Prior to ignition, a pre-purge cycle for 15 seconds is initiated
- After the main burners are turned off, a post-purge cycle for 5 seconds is run
- Flame sensor assures safe and reliable operation
- Should loss of flame occur, the integrated furnace control will initiate 4 re-attempts at ignition before locking out unit operation for 60 minutes
- Watchguard type circuit automatically resets ignition controls after one hour of continuous thermostat demand after unit lockout, eliminating nuisance calls for service
- Fan control consists of adjustable blower timed-off delay (60, 90, 120, 180 seconds - factory setting 90 seconds) and fixed blower timed-on delay (30 seconds heating, 2 seconds cooling)
- For air-conditioning applications, blower is automatically energized on thermostat demand for cooling
- Two accessory terminals furnished for additional power supply requirements for 120 volt (less than 1 amp) power humidifiers and powered air cleaners
- One additional terminal is furnished for power supply requirements for 24V (less than 0.5 amp) low voltage accessories
- Ignition control has a single red LED to indicate status and as an aid in troubleshooting
- Last ten codes are stored in non-volatile memory (accessible by recall button on control) for servicing

24 Volt Transformer (40VA)

- Furnished and factory installed on outside of control box
- Circuit breaker (furnished) is wired in series

Field Wiring Make-Up Box

- Furnished for line voltage wiring
- Factory installed internally on left side of furnace
- Box may be installed internally on right side of furnace

CONTROLS (continued)

Optional Accessories

M30 Smart Wi-Fi Thermostat

- Wi-Fi-enabled, electronic 7-day, universal, multi-stage, programmable, touchscreen thermostat
- 4 Heat/2 Cool
- Auto-changeover
- Dual-fuel control with optional outdoor sensor
- Controls dehumidification during cooling mode and humidification during heating mode

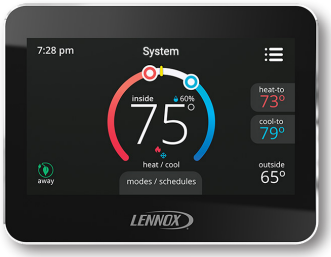

- Offers enhanced capabilities including humidification / dehumidification / dewpoint measurement and control, Humiditrol® control, and equipment maintenance reminders
- Easy to read 4.3 in. color touchscreen (measured diagonally)
- LCD display with backlight shows the current and set temperature, time, inside relative humidity, system status (operating mode and schedules) and outside temperature (optional outdoor sensor required)
- Smooth Setback Recovery starts system early to achieve setpoint at start of program period
- Compressor short-cycle protection (5 minutes)
- Up to four separate schedules are available plus Schedule IQ™
- One-Touch Away Mode - A quick and easy way to set the cooling and heating setpoints while away
- Smart Away™ - Uses geo-fencing technology to determine when the homeowner is within a predetermined distance from the home to operate the system when leaving, away and arriving
- Wi-Fi remote monitoring and adjustment through a home wireless network for desktop PCs, laptops and apps for smartphones or tablets
- Smart home automation compatible with Amazon Alexa®, Google Assistant and IFTTT
- Service Dashboard features online real-time monitoring of installed thermostats

NOTE - See the M30 Smart Wi-Fi Thermostat Product Specifications bulletin in the Controls section for more information.

Remote Outdoor Temperature Sensor

- Used with the M30 Smart Thermostat
- Outdoor sensor allows thermostat to display outdoor temperature

NOTE - Sensor is required for the Enhanced Dehumidification Accessory (EDA).

Thermostat

- Thermostat is not furnished with unit
- See Lennox Price Book for selection

Blower Relay Kit (For Use With Two-Stage Outdoor Units)

- Allows furnace blower speed changes when matched with two-stage air conditioners or heat pumps

Furnace Twinning Panel

- Required to operate two identical furnaces simultaneously from a single thermostat
- For single stage conventional (1 heat/1 cool), multi-stage conventional (2 heat/2 cool) and heat pump (3 heat/2 cool) equipment
- Can be used with common or separate ducted systems
- Contains PC Control Board with terminal strip connections for thermostat and HVAC equipment
- LEDs indicate system operating status
- Uses standard 18-gauge thermostat wire
- Power Supply: 24 VAC, 40VA (transformer not furnished)
- Mounting base with hardware furnished
- Dimensions (H x W x D): 10 x 5 x 2 in.

NOTE - Only identical furnaces should be twinned in order to ensure that both furnace blowers start at the same time. If furnaces are not identical, back draft dampers can be installed in either the supply or return duct.

Up to four identical furnaces can be twinned. Requires two panels that are wired together.

Furnace Twinning Kit

- Required to operate two furnaces simultaneously
- Kit consists of twinning relays, quick connect terminals and mounting hardware
- Used for single-stage heating/single-stage cooling with a single-stage thermostat

Transformer (75VA)

- Recommended when furnace is used with zoning or defrost thermostats and other 24V accessories requiring a higher VA rating
- Circuit breaker (furnished) is wired in series
- Replaces the standard 40VA transformer

FEATURES

BLOWER

- Direct drive blower
- Statically and dynamically balanced
- Resiliently mounted
- Blower assembly easily removed for servicing

7 Power Saver™ Constant Torque Blower Motor

- DC Brushless Motor
- High Efficiency Constant Torque
- ECM (Electronically Commutated Motor)
- Motor is programmed to provide constant torque at each of the selectable speeds
- Motor is controlled by the Integrated Furnace Control
- Blower speeds are easily changed on the integrated furnace control
- See Blower Data tables

CABINET

- Low-profile, narrow width allows easy installation
- Heavy-gauge, cold rolled steel construction
- Pre-painted cabinet finish
- Flanges provided on supply air opening for ease of plenum connection or alignment with indoor coil
- 8 Insulated with foil faced insulation on sides and back of heating compartment
- Sealed blower compartment
- Complete service access
- 9 Safety interlock switch automatically shuts off power to unit when blower compartment access door is removed
- 10 Gas piping and electrical inlets are provided in both sides of cabinet

Coil Match-Up

- All Lennox downflow indoor coils will physically match the furnace supply air opening with the same letter designation (A, B, C, D) as in the furnace model number.

Low Leakage Cabinet

- All models have less than 2% air leakage
- Meets ANSI/ASHRAE Standard 193-2010 “Method of Test for Determining the Air Tightness of HVAC Equipment”

Optional Accessories

Condensate Drain Heat Cable Kits

- Self-limiting wattage heat cable prevents condensate drain from freezing in unconditioned areas
- Available in 6 or 24 ft. lengths

Crawl Space Vent Drain Kit

- Allows venting through a crawl space for upflow and horizontal applications
- Kit for Canada is certified to ULC S636
- Includes 2 or 3 inch sanitary tee, 2 inch PVC assembly, PVC boot and clamp

Downflow Combustible Flooring Base

- Required for heating only units installed on combustible floors
- Not required in add-on cooling applications
- See Dimension Drawing

FILTER (not furnished)

- Filter and provisions for external mounting must be field provided

Optional Accessories

Downflow Filter Cabinet

- Filter cabinet mounts directly on top of furnace
- “B” and “C” width cabinets have two filters
- Filter rails are furnished
- Front access for servicing
- Cleanable filter(s) are furnished

FEATURES

REFRIGERATION DETECTION SYSTEM (RDS)

Optional Accessories

Refrigerant Detection System (RDS) Coil Sensor Kit

- Complies with UL 60335-2-40 approved standard
- Required for field installation for all systems using R-454B refrigerant if sensor is not furnished with coil
- Consists of Refrigerant Detection System (RDS) sensor, lineset sleeves, mounting brackets and A2L labeling
- Sensor ensures safe operation for systems equipped with R-454B refrigerant
- Sensor will detect anu R-454B refrigerant

Refrigerant Detection System (RDS) Blower Control Board

Communicating Blower Control Board (Universal)

- Communicating Blower Control Board and Sensor can be used universally with any Lennox® communicating furnace or any non-communicating 24 volt furnace

Non-Communicating Blower Control Board

- Non-Communicating Blower Control Board and Sensor can be used with any non-communicating 24 volt furnace

Standard Features

- Complies with UL 60335-2-40 approved standard
- Required for all systems using R-454B refrigerant
- Connects to the RDS sensor furnished with the RDS Coil Sensor Kit
- Supports up to two RDS Sensors (factory setting)
- Used as an interface between indoor unit and thermostat to control system
- Ensures safe operation for systems equipped with R-454B refrigerant
- If R-454B refrigerant is detected, the refrigerant detection system will stop compressor and/or heating operating and operate the blower to reduce concentrations in the conditioned space
- Once safe levels are reached the HVAC system will resume normal operation
- Multi-color LED for system status and as an aid in troubleshooting
  - Flashing LED codes for system status (Green/Blue) and diagnosing Sensor errors (Red)
- Alarm relay can trigger an external alarm if R-454B refrigerant is detected
- Zone relay opens all zone dampers (if part of a zoning system) if R-454B refrigerant is detected
- Power is disabled to non-communicating thermostats to prevent demand if R-454B refrigerant is detected
- On system start-up blower will run for five minutes and any thermostat demands are disabled
- Dimensions (H x W x D): 7-7/16 x 7-7/16 x 2-1/2 (189 x 189 x 127 mm)

NOTE - See Refrigerant Detection System (RDS) Components Table on page 11.

See the CK40 Indoor Coil Product Specifications bulletins for more information.

Refer to the Installation Instructions for additional information.

SPECIFICATIONS

	Model No.	ML196DF045XE36B	ML196DF070XE48B	ML196DF090XE48C	ML196DF110XE60C
Gas Heating Performance	[1] AFUE	96%	96%	96%	96%
	Input - Btuh	44,000	66,000	88,000	110,000
	Output - Btuh	43,000	64,000	86,000	108,000
	Temperature rise range - °F	30 - 60	35 - 65	50 - 80	40 - 70
	Gas Manifold Pressure (in. w.g.) Nat. Gas / LPG/Propane	3.5 / 10	3.5 / 10	3.5 / 10	3.5 / 10
	High static - in. w.g.	0.5	0.5	0.5	0.5
Energy Star® Certified		Yes	Yes	Yes	Yes
Connections in.	Intake / Exhaust Pipe (PVC)	2 / 2	2 / 2	2 / 2	2 / 2
	Gas pipe size IPS	1/2	1/2	1/2	1/2
	Condensate Drain Trap (PVC pipe) - i.d.	3/4	3/4	3/4	3/4
	with furnished 90° street elbow	3/4 slip x 3/4 Mipt	3/4 slip x 3/4 Mipt	3/4 slip x 3/4 Mipt	3/4 slip x 3/4 Mipt
	with field supplied (PVC coupling) - o.d.	3/4 slip x 3/4 MPT	3/4 slip x 3/4 MPT	3/4 slip x 3/4 MPT	3/4 slip x 3/4 MPT
Indoor Blower	Wheel nom. diameter x width - in.	10 x 8	11-1/2 x 10	10 x 10	11 x 11
	Motor Type	DC Brushless	DC Brushless	DC Brushless	DC Brushless
	Motor output - hp	1/2	3/4	3/4	1
	Tons of add-on cooling	1.5 - 3	2 - 4	2 - 4	3 - 5
	Air Volume Range - cfm	505 - 1455	525 - 1720	860 - 1760	1010 - 3115
Electrical Data	Voltage	120 volts - 60 hertz - 1 phase			
	Blower motor full load amps	6.8	8.4	8.4	10.9
	Maximum overcurrent protection	15	15	15	15
Shipping Data	lbs. - 1 package	126	139	154	162

NOTE - Filters and provisions for mounting are not furnished and must be field provided.

[1] Annual Fuel Utilization Efficiency based on DOE test procedures and according to FTC labeling regulations. Isolated combustion system rating for non-weatherized furnaces.

INSTALLATION CLEARANCES

Sides	[1] 0 inches (0 mm)
Rear	0 inches (0 mm)
Top/Plenum	1 inch (25 mm)
Front	0 inches (0 mm)
Front (service/alcove)	24 inches (610 mm)
Floor	[2] Combustible

NOTE - Air for combustion must conform to the methods outlined in the National Fuel Gas Code (NFPA 54/ ANSI-Z223.1) or the National Standard of Canada CAN/CSA-B149.1 “Natural Gas and Propane Installation Code”.

NOTE - In the U.S. flue sizing must conform to the methods outlined in the current National Fuel Gas Code (NFPA 54/ANSI-Z223.1) or applicable provisions of local building codes. In Canada flue sizing must conform to the methods outlined in National Standard of Canada CAN/CSA-B149.1.

[1] Allow proper clearances to accommodate condensate trap and vent pipe installation.

[2] Clearance for installation on combustible floor if Optional Downflow Combustible Flooring Base is installed between furnace and combustible floor. Not required in add-on cooling applications if installed in accordance with local codes or National Fuel Gas Code ANSI-Z223.1 or CAN/CGA−149.1,.2. Do not install the furnace directly on carpeting, tile, or other combustible materials other than wood flooring.

OPTIONAL ACCESSORIES

			"B" Width Models	"C" Width Models
CABINET ACCESSORIES				
Downflow Combustible Flooring Base			**11M60**	**11M61**
CONDENSATE DRAIN KITS				
Condensate Drain Heat Cable		6 ft.	**26K68**	**26K68**
		24 ft.	**26K69**	**26K69**
Crawl Space Vent Drain Kit		US	**51W18**	**51W18**
		Canada	**15Z70**	**15Z70**
CONTROLS				
M30 Smart Wi-Fi Thermostat			**15Z69**	**15Z69**
Remote Outdoor Temperature Sensor			**X2658**	**X2658**
Furnace Twinning Panel			**Y3653**	**Y3653**
Furnace Twinning Kit			**16W72**	**16W72**
Transformer (75VA)			**27J32**	**27J32**
Blower Relay Kit (for two-stage outdoor units)			**85W66**	**85W66**
DOWNFLOW FILTER KITS				
[1] **Downflow Filter Cabinet**			**51W07**	**51W08**
		No. and Size of filter - in.	(2) 16 x 20 x 1	(2) 16 x 20 x 1
TERMINATION KITS				
See Installation Instructions for specific venting information.				
Direct Vent	Concentric	US - 2 in.	**71M80**	**69M29**
		3 in.	**- - -**	**60L46**
		Canada - 2 in.	**44W92**	**44W92**
		3 in.	**- - -**	**44W93**
	Flush-Mount	US - 2, 2-1/2 or 3 in.	**51W11**	**51W11**
		Canada - 2, 2-1/2 or 3 in.	**51W12**	**51W12**
	Wall - Close Couple	US - 2 in.	**22G44**	**- - -**
		3 in.	**44J40**	**44J40**
	Wall - Close Couple WTK	Canada - 2 in.	**30G28**	**- - -**
		3 in.	**81J20**	**81J20**
	Roof Termination Flashing Kit (no vent pipe - 2 flashings)	2 in.	**15F75**	**15F75**
		3 in.	**44J41**	**44J41**
VENTING				
Flue Coupling		2 in.	**17H92**	**17H92**

[1] Cleanable polyurethane frame type filter.

NOTE - Termination Kits (**44W92**, **44W93**, **30G28**, **51W12**, **81J20**) and Crawl Space Vent Drain Kit (**15Z70**) are certified to ULC S636 standard for use in Canada only.

GAS HEAT ACCESSORIES

Input	High Altitude Pressure Switch Kit		Natural Gas to LPG/Propane Kit	LPG/Propane to Natural Gas Kit	Natural Gas High Altitude Orifice Kit	LPG/Propane High Altitude Orifice Kit	Muffler (US Only)
	4501 - 7500 ft.	7501 - 10,000 ft.	0 - 7500 ft.	0 - 7500 ft.	7501 - 10,000 ft.	7501 - 10,000 ft.	
045	11U65	11U66	11K49	73W81	73W37	11K44	15Y66 (2-inch)
070	11U70	11U68	11K49	73W81	73W37	11K44	15Y66 (2-inch)
090	11U71	11U68	11K49	73W81	73W37	11K44	15Y66 (2-inch)
110	11U70	11U68	11K49	73W81	73W37	11K44	15Y66 (2-inch)

REFRIGERANT DETECTION SYSTEM (RDS) COMPONENTS

Description		Order No.
Refrigerant Detection System (RDS) Coil Sensor Kit		26Z69
Refrigerant Detection System (RDS) Blower Control Board	Any Lennox® Communicating Furnace or any Non-Communicating 24V Furnace (Universal)	27A03
	Any Non-Communicating 24V Furnace	27A02

NOTE - Communicating Blower Control Board and Sensor can be used universally with Lennox® communicating furnace or any non-communicating 24 volt furnace. Non-Communicating Blower Control Board and Sensor can be used with any non-communicating 24 volt furnace.

HIGH ALTITUDE DERATE

NOTE - Units may be installed at altitudes up to 10,000 ft.
At altitudes above 4501 ft. the unit must be derated to match the manifold pressure information shown below.
Units installed at altitudes of 4501 to 10,000 ft. require a pressure switch change.
Units installed at altitudes of 7501 to 10,000 ft. require an orifice change.
See the Gas Heat Accessories table for ordering information.

NOTE - This is the only permissible derate for these units.

NOTE - In Canada, certification for installations at elevations over 4500 feet is the jurisdiction of local authorities.

Input	Gas	Manifold Pressure in. w.g.					Supply Line Pressure in. w.g. 0 - 10,000 ft.	
		0 - 4500 ft.	4501 - 5500 ft.	5501 - 6500 ft.	6501 - 7500 ft.	7501 - 10,000 ft.	Min.	Max.
All Sizes	Natural	3.5	3.3	3.2	3.1	3.5	4.5	13.0
	LPG/Propane	10.0	9.4	9.1	8.9	10.0	11.0	13.0

OUTDOOR TERMINATION KIT USAGE

Input Size	Vent Pipe Diameter (in.)	Standard Terminations				Concentric Terminations		
		Flush Mount Kit	Wall Kit		Field Fabricated Exhaust Accelerator Size Required	Concentric Kit		
			2 inch	3 inch		1-1/2 inch	2 inch	3 inch
		51W11 (US) [5] 51W12 (CA)	22G44 (US) [5] 30G28 (CA)	44J40 (US) [5] 81J20 (CA)		71M80 (US) [5] 44W92 (CA)	69M29 (US) [5] 44W92 (CA)	60L46 (US) [5] 44W93 (CA)
045	[1] 1-1/2	[4] YES	YES	[2] YES	1-1/2 in.	[3] YES	- - -	- - -
	2	[4] YES	YES	[2] YES	1-1/2 in.	[3] YES	- - -	- - -
	2-1/2	[4] YES	YES	[2] YES	1-1/2 in.	[3] YES	- - -	- - -
	3	[4] YES	YES	[2] YES	1-1/2 in.	[3] YES	- - -	- - -
070	[1] 1-1/2	[4] YES	YES	[2] YES	1-1/2 in.	[3] YES	- - -	- - -
	2	[4] YES	YES	[2] YES	1-1/2 in.	[3] YES	- - -	- - -
	2-1/2	[4] YES	YES	[2] YES	1-1/2 in.	[3] YES	- - -	- - -
	3	[4] YES	YES	[2] YES	1-1/2 in.	[3] YES	- - -	- - -
090	2	[4] YES	- - -	YES	2 in.	- - -	YES	YES
	2-1/2	[4] YES	- - -	YES	2 in.	- - -	YES	YES
	3	[4] YES	- - -	YES	2 in.	- - -	YES	YES
110	2	YES	- - -	YES	2 in.	- - -	YES	YES
	2-1/2	YES	- - -	YES	2 in.	- - -	YES	YES
	3	YES	- - -	YES	2 in.	- - -	YES	YES

NOTE - Standard Terminations do not include any vent pipe or elbows external to the structure.
Any vent pipe or elbows external to the structure must be included in total vent length calculations. See Vent Length Tables.

[1] 2 inch to 1-1/2 inch reducer required, must be field provided.

[2] Requires field provided 1-1/2 in. outdoor exhaust accelerator.

[3] Concentric Kits **71M80** and **44W92** include 1-1/2 in. outdoor exhaust accelerator, required when used with 030, 045 and 070 input models. Accelerator is not used with 090 or 110 input models. When using 1-1/2 in. piping, the pipe must be transitioned to 2 in. pipe when used with the Concentric Kit.

[4] Flush Mount Kit **51W11** and **51W12** includes 1-1/2 in. outdoor exhaust accelerator, required when used with 030, 045, 070 and 090 input models. Accelerator is not used with 110 input models. When using 1-1/2 in. piping, the pipe must be transitioned to 2 in. pipe when used with the Flush Mount Kit.

[5] Termination Kits **30G28**, **44W92**, **44W93**, **51W12** and **81J20** are certified to ULC S636 standard for use in Canada only.

STANDARD TERMINATION AT 0 - 2000 ft. ELEVATION

	Pipe Size	1-1/2 in.				2 in.				2-1/2 in.				3 in.			
	Input	045	070	090	110	045	070	090	110	045	070	090	110	045	070	090	110
No. of 90 ELL	1	15	15	N/A	N/A	61	46	24	N/A	100	80	43	N/A	127	127	108	108
	2	10	10	N/A	N/A	56	41	19	N/A	95	75	38	N/A	122	122	103	103
	3	N/A	N/A	N/A	N/A	51	36	14	N/A	90	70	33	N/A	117	117	98	98
	4	N/A	N/A	N/A	N/A	46	31	N/A	N/A	85	65	28	N/A	112	112	93	93
	5	N/A	N/A	N/A	N/A	41	26	N/A	N/A	80	60	23	N/A	107	107	88	88
	6	N/A	N/A	N/A	N/A	36	21	N/A	N/A	75	55	18	N/A	102	102	83	83
	7	N/A	N/A	N/A	N/A	31	16	N/A	N/A	70	50	13	N/A	97	97	78	78
	8	N/A	N/A	N/A	N/A	26	11	N/A	N/A	65	45	N/A	N/A	92	92	73	73
	9	N/A	N/A	N/A	N/A	21	N/A	N/A	N/A	60	40	N/A	N/A	87	87	68	68
	10	N/A	N/A	N/A	N/A	16	N/A	N/A	N/A	55	35	N/A	N/A	82	82	63	63

NOTES - Additional vent pipe and long radius elbows (required) used to terminate vent pipe outside the structure must be included in the total vent length calculation.
Intake and exhaust pipes are sized separately.
Values in table are for separate intake or exhaust pipe lengths.
Both intake and exhaust pipe must be the same size diameter.

STANDARD TERMINATION AT 2001 - 10,000 ft. ELEVATION

	Pipe Size	1-1/2 in.	2 in.							
	Input	030	045	070			090			110
	Elevation	- - -	2001-10,000 ft.	2001-3000 ft.	3001-4000 ft.	4001-10,000 ft.	2001-3000 ft.	3001-4000 ft.	4001-10,000 ft.	2001-10,000 ft.
No. of 90 ELL	1	N/A	35	40	35	25	20	18	15	N/A
	2		30	35	30	20	15	13	10	N/A
	3		25	30	25	15	10	8	N/A	N/A
	4		15	25	20	10	N/A	N/A	N/A	N/A
	5		10	20	15	N/A	N/A	N/A	N/A	N/A
	6		N/A	15	10	N/A	N/A	N/A	N/A	N/A
	7		N/A	10	N/A	N/A	N/A	N/A	N/A	N/A
	8		N/A	N/A	N/A	N/A	N/A	N/A	N/A	N/A
	9		N/A	N/A	N/A	N/A	N/A	N/A	N/A	N/A
	10		N/A	N/A	N/A	N/A	N/A	N/A	N/A	N/A

	Pipe Size	2-1/2 in.				3 in.			
	Input	045	070	090	110	045	070	090	110
	Elevation	2001-10,000 ft.				2001-10,000 ft.			
No. of 90 ELL	1	100	73	43	N/A	127	127	108	108
	2	95	68	38	N/A	122	122	103	103
	3	90	63	33	N/A	117	117	98	98
	4	85	58	28	N/A	112	112	93	93
	5	80	53	23	N/A	107	107	88	88
	6	75	48	18	N/A	102	102	83	83
	7	70	43	13	N/A	97	97	78	78
	8	65	38	N/A	N/A	92	92	73	73
	9	60	33	N/A	N/A	87	87	68	68
	10	55	28	N/A	N/A	82	82	63	63

NOTES - Additional vent pipe and long radius elbows (required) used to terminate vent pipe outside the structure must be included in the total vent length calculation.
Intake and exhaust pipes are sized separately.
Values in table are for separate intake or exhaust pipe lengths.
Both intake and exhaust pipe must be the same size diameter.

CONCENTRIC TERMINATION AT 0 - 2000 ft. ELEVATION

	Pipe Size	1-1/2 in.				2 in.				2-1/2 in.				3 in.			
	Input	045	070	090	110	045	070	090	110	045	070	090	110	045	070	090	110
No. of 90 ELL	1	10	10	N/A	N/A	53	38	22	N/A	90	70	39	N/A	111	111	104	104
	2	N/A	N/A	N/A	N/A	48	33	17	N/A	85	65	34	N/A	106	106	99	99
	3	N/A	N/A	N/A	N/A	43	28	12	N/A	80	60	29	N/A	101	101	94	94
	4	N/A	N/A	N/A	N/A	38	23	N/A	N/A	75	55	24	N/A	96	96	89	89
	5	N/A	N/A	N/A	N/A	33	18	N/A	N/A	70	50	19	N/A	91	91	84	84
	6	N/A	N/A	N/A	N/A	28	13	N/A	N/A	65	45	14	N/A	86	86	79	79
	7	N/A	N/A	N/A	N/A	23	N/A	N/A	N/A	60	40	9	N/A	81	81	74	74
	8	N/A	N/A	N/A	N/A	18	N/A	N/A	N/A	55	35	N/A	N/A	76	76	69	69
	9	N/A	N/A	N/A	N/A	13	N/A	N/A	N/A	50	30	N/A	N/A	71	71	64	64
	10	N/A	N/A	N/A	N/A	n/a	N/A	N/A	N/A	45	25	N/A	N/A	66	66	59	59

NOTES - Additional vent pipe and long radius elbows (required) used to terminate vent pipe outside the structure must be included in the total vent length calculation.
Intake and exhaust pipes are sized separately.
Values in table are for separate intake or exhaust pipe lengths.
Both intake and exhaust pipe must be the same size diameter.

CONCENTRIC TERMINATION AT 2001 - 10,000 ft. ELEVATION

	Pipe Size	1-1/2 in.	2 in.							
	Input	030	045	070			090			110
	Elevation	- - -	2001-10,000 ft.	2001-3000 ft.	3001-4000 ft.	4001-10,000 ft.	2001-3000 ft.	3001-4000 ft.	4001-10,000 ft.	2001-10,000 ft.
No. of 90 ELL	1	N/A	35	40	35	25	20	18	15	N/A
	2		30	35	30	20	15	13	10	N/A
	3		25	30	25	15	10	8	N/A	N/A
	4		20	25	20	10	N/A	N/A	N/A	N/A
	5		15	20	15	N/A	N/A	N/A	N/A	N/A
	6		10	15	10	N/A	N/A	N/A	N/A	N/A
	7		N/A	10	N/A	N/A	N/A	N/A	N/A	N/A
	8		N/A	N/A	N/A	N/A	N/A	N/A	N/A	N/A
	9		N/A	N/A	N/A	N/A	N/A	N/A	N/A	N/A
	10		N/A	N/A	N/A	N/A	N/A	N/A	N/A	N/A

	Pipe Size	2-1/2 in.				3 in.			
	Input	045	070	090	110	045	070	090	110
	Elevation	2001-10,000 ft.				2001-10,000 ft.			
No. of 90 ELL	1	90	63	39	N/A	111	111	104	104
	2	85	58	34	N/A	106	106	99	99
	3	80	53	29	N/A	101	101	94	94
	4	75	48	24	N/A	96	96	89	89
	5	70	43	19	N/A	91	91	84	84
	6	65	38	14	N/A	86	86	79	79
	7	60	33	9	N/A	81	81	74	74
	8	55	28	N/A	N/A	76	76	69	69
	9	50	23	N/A	N/A	71	71	64	64
	10	45	18	N/A	N/A	66	66	59	59

NOTES - Additional vent pipe and long radius elbows (required) used to terminate vent pipe outside the structure must be included in the total vent length calculation.
Intake and exhaust pipes are sized separately.
Values in table are for separate intake or exhaust pipe lengths.
Both intake and exhaust pipe must be the same size diameter.

STANDARD TERMINATION AT 0 - 2000 ft. ELEVATION

Pipe Size		1-1/2 in.				2 in.				2-1/2 in.				3 in.			
Input		045	070	090	110	045	070	090	110	045	070	090	110	045	070	090	110
No. of 90 ELL	1	10	10	N/A	N/A	51	36	14	N/A	85	65	28	N/A	107	107	88	88
	2	N/A	N/A	N/A	N/A	46	31	9	N/A	80	60	23	N/A	102	102	83	83
	3	N/A	N/A	N/A	N/A	41	26	N/A	N/A	75	55	18	N/A	97	97	78	78
	4	N/A	N/A	N/A	N/A	36	21	N/A	N/A	70	50	13	N/A	92	92	73	73
	5	N/A	N/A	N/A	N/A	31	16	N/A	N/A	65	45	8	N/A	87	87	68	68
	6	N/A	N/A	N/A	N/A	26	11	N/A	N/A	60	40	N/A	N/A	82	82	63	63
	7	N/A	N/A	N/A	N/A	21	N/A	N/A	N/A	55	35	N/A	N/A	77	77	58	58
	8	N/A	N/A	N/A	N/A	16	N/A	N/A	N/A	50	30	N/A	N/A	72	72	53	53
	9	N/A	N/A	N/A	N/A	11	N/A	N/A	N/A	45	25	N/A	N/A	67	67	48	48
	10	N/A	N/A	N/A	N/A	N/A	N/A	N/A	N/A	40	20	N/A	N/A	62	62	43	43

NOTE - Additional vent pipe and long radius elbows (required) used to terminate vent pipe outside the structure must be included in the total vent length calculation.

STANDARD TERMINATION AT 2001 - 10,000 ft. ELEVATION

Pipe Size		1-1/2 in.	2 in.							
Input		030	045	070			090			110
Elevation		- - -	2001-10,000 ft.	2001-3000 ft.	3001-4000 ft.	4001-10,000 ft.	2001-3000 ft.	3001-4000 ft.	4001-10,000 ft.	2001-10,000 ft.
No. of 90 ELL	1	N/A	30	35	30	20	15	13	10	N/A
	2		25	35	30	15	10	8	N/A	N/A
	3		20	30	25	10	N/A	N/A	N/A	N/A
	4		15	25	20	N/A	N/A	N/A	N/A	N/A
	5		10	20	15	N/A	N/A	N/A	N/A	N/A
	6		N/A	15	10	N/A	N/A	N/A	N/A	N/A
	7		N/A	10	N/A	N/A	N/A	N/A	N/A	N/A
	8		N/A	N/A	N/A	N/A	N/A	N/A	N/A	N/A
	9		N/A	N/A	N/A	N/A	N/A	N/A	N/A	N/A
	10		N/A	N/A	N/A	N/A	N/A	N/A	N/A	N/A

Pipe Size		2-1/2 in.				3 in.			
Input		045	070	090	110	045	070	090	110
Elevation		2001-10,000 ft.				2001-10,000 ft.			
No. of 90 ELL	1	80	53	28	N/A	107	107	88	88
	2	75	48	23	N/A	102	102	83	83
	3	70	43	18	N/A	97	97	78	78
	4	65	38	13	N/A	92	92	73	73
	5	60	33	8	N/A	87	87	68	68
	6	55	28	3	N/A	82	82	63	63
	7	50	23	N/A	N/A	77	77	58	58
	8	45	18	N/A	N/A	72	72	53	53
	9	40	13	N/A	N/A	67	67	48	48
	10	35	8	N/A	N/A	62	62	43	43

NOTES - Additional vent pipe and long radius elbows (required) used to terminate vent pipe outside the structure must be included in the total vent length calculation.
Intake and exhaust pipes are sized separately.
Values in table are for separate intake or exhaust pipe lengths.
Both intake and exhaust pipe must be the same size diameter.

VENT LENGTHS — UNINSULATED EXHAUST PIPE IN UNCONDITIONED SPACE

[1] Winter Design Temperatures	Vent Pipe Diameter	Unit Input Size							
		045		070		090		110	
		Maximum Uninsulated Exhaust Vent Length (ft.)							
		PVC	PolyPro InnoFlue	PVC	PolyPro InnoFlue	PVC	PolyPro InnoFlue	PVC	PolyPro InnoFlue
32 to 21°F	1-1/2 in.	20	N/A	20	N/A	N/A	N/A	N/A	N/A
	2 in.	18	16	31	28	50	48	30	30
	2-1/2 in.	13	N/A	24	N/A	42	N/A	36	N/A
	3 in.	9	9	18	18	35	35	29	29
20 to 1°F	1-1/2 in.	15	N/A	20	N/A	N/A	N/A	n/a	n/a
	2 in.	9	8	18	16	32	29	27	24
	2-1/2 in.	5	N/A	13	N/A	24	N/A	20	n/a
	3 in.	N/A	N/A	8	8	19	19	14	14
0 to –20°F	1-1/2 in.	10	N/A	15	N/A	N/A	N/A	N/A	N/A
	2 in.	5	N/A	12	10	22	19	18	15
	2-1/2 in.	N/A	N/A	7	N/A	15	N/A	12	N/A
	3 in.	N/A	N/A	N/A	N/A	10	10	7	7

NOTE - Concentric terminations are equivalent to 5 ft. of straight pipe and should be included when measuring total pipe length.

NOTE - Each elbow is equivalent to 5 ft. of straight pipe and should be included when measuring total pipe length.

[1] Refer to 99% Minimum Design Temperature table provided in the current edition of the ASHRAE Handbook-Fundamentals.

PolyPro® poly-propylene vent pipe is a registered trademark of DuraVent®.

Innoflue® is a registered trademark of Centrotherm Eco Systems.

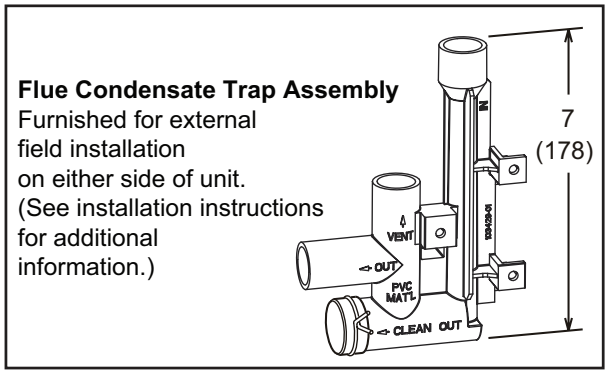

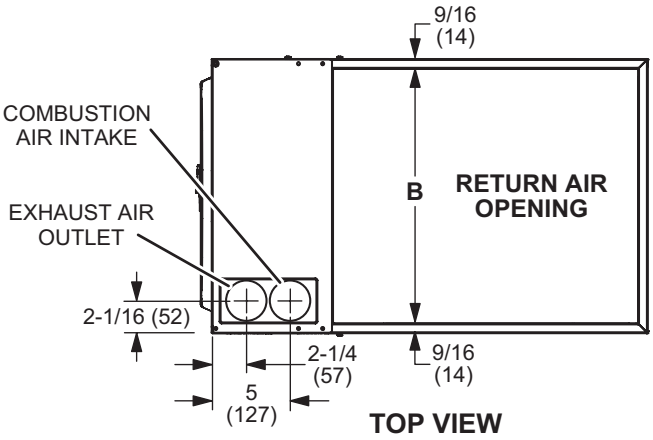

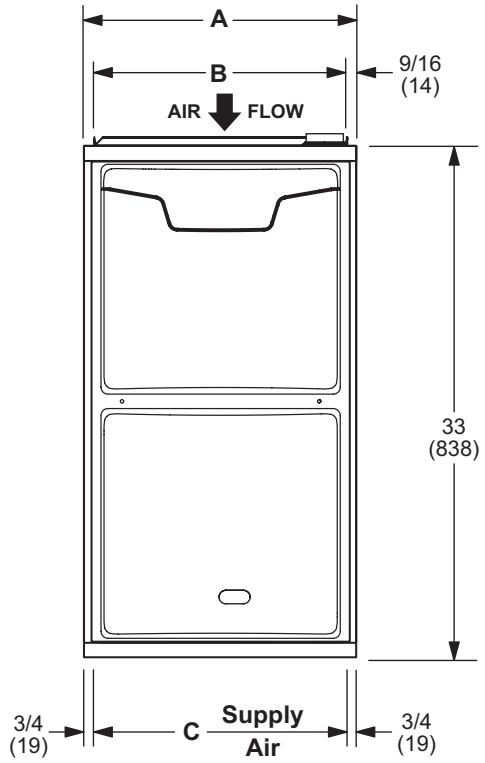

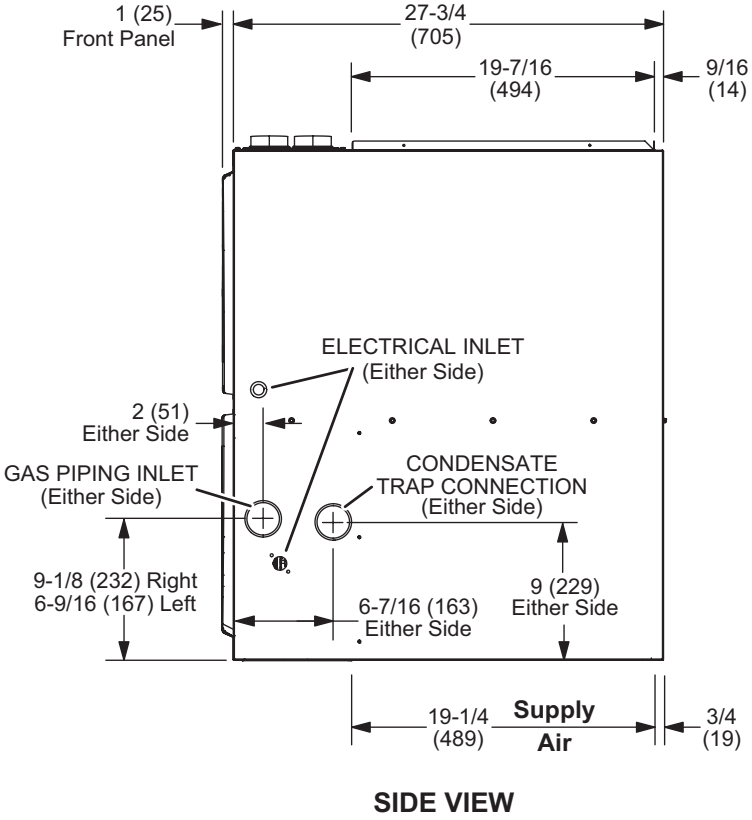

Model No.	A		B		C	
	in.	mm	in.	mm	in.	mm
ML196DF045XE36B ML196DF070XE48B	17-1/2	446	16-3/8	416	16	406
ML196DF090XE48C ML196DF110XE60C	21	533	19-7/8	505	19-1/2	495

DOWNFLOW FILTER CABINET

“B AND ”C” WIDTH FURNACES
(Two Filters)

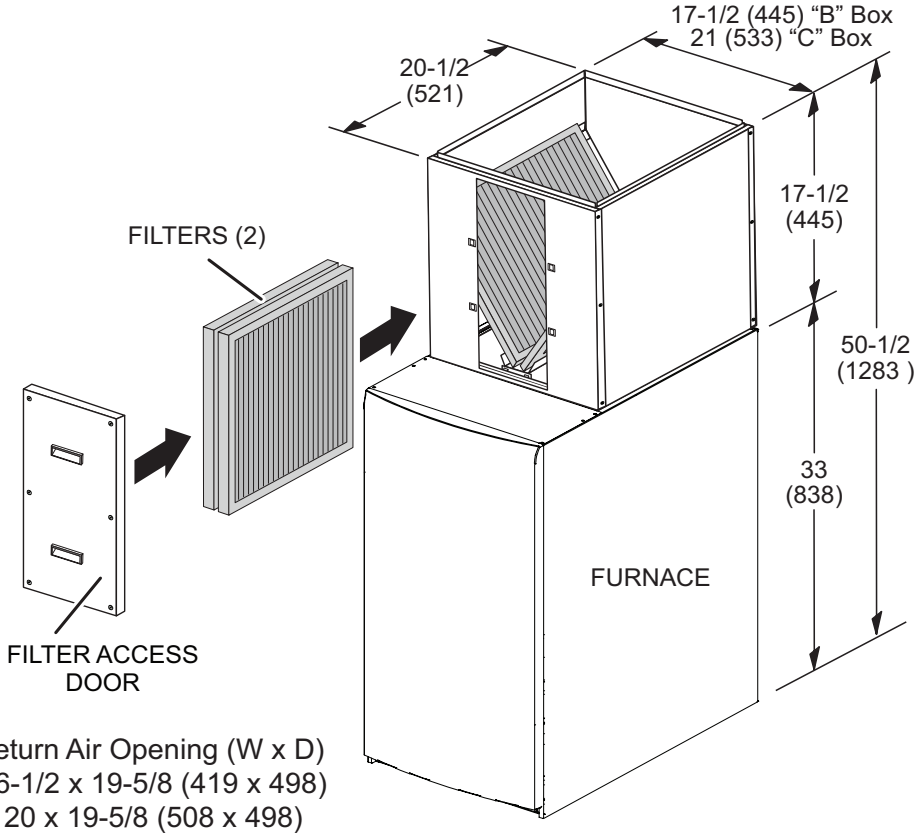

NOTE: Return Air Opening (W x D)
“B” Box 16-1/2 x 19-5/8 (419 x 498)
“C” Box 20 x 19-5/8 (508 x 498)

DOWNFLOW COMBUSTIBLE FLOORING BASE

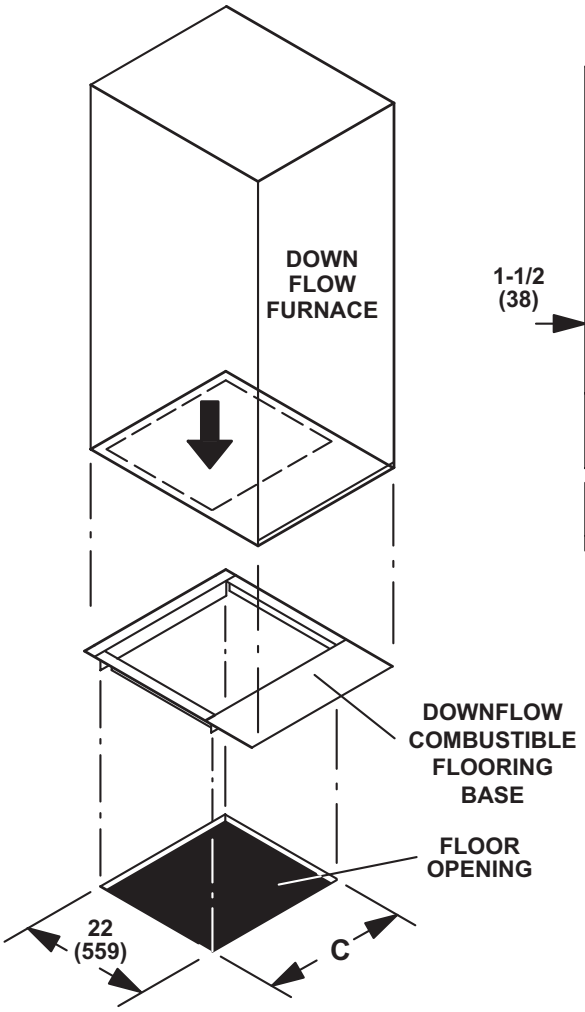

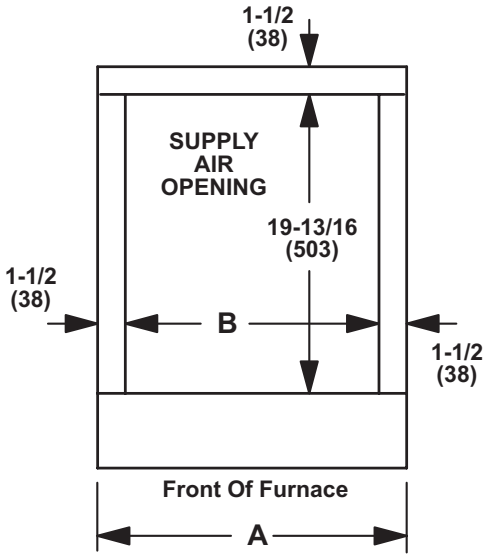

TOP VIEW

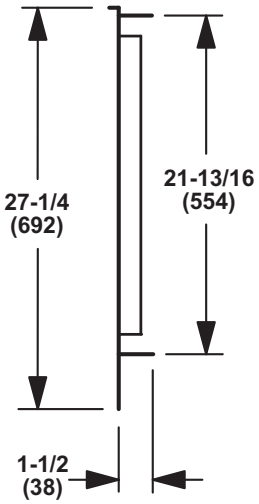

SIDE VIEW

Cabinet Width	Catalog Number	A		B		C	
		in.	mm	in.	mm	in.	mm
B	**11M60**	19-9/16	497	16-9/16	421	18-3/4	476
C	**11M61**	23-1/16	586	20-1/16	510	22-1/4	565

DIMENSIONS FURNACE/COIL COMBINED DIMENSIONS

Model		Coil/Furnace Width		Coil Height		Overall Height	
CK40DT	**CRX35**	in.	mm	in.	mm	in.	mm
CK40DT-24B	CRX35-24B	17-1/2	445	18	457	51	1295
CK40DT-30/36B	CRX35-30/36B	17-1/2	445	23-1/2	597	56-1/2	1435
CK40DT-30/36C	CRX35-30/36C	21	533	23-1/2	597	56-1/2	1435
CK40DT-42B	CRX35-42B	17-1/2	445	23-1/2	597	56-1/2	1435
CK40DT-48C	CRX35-48C	21	533	27-1/2	699	60-1/2	1537
CK40CT-50/60C	CRX35-50/60C	21	533	27-1/2	699	60-1/2	1537

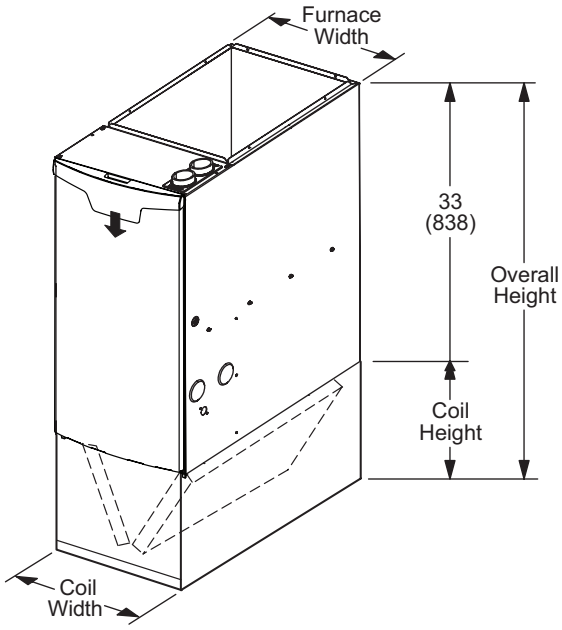

FLUSH-MOUNT VENT TERMINATION KIT 51W11 (US) or 51W12 (CANADA)

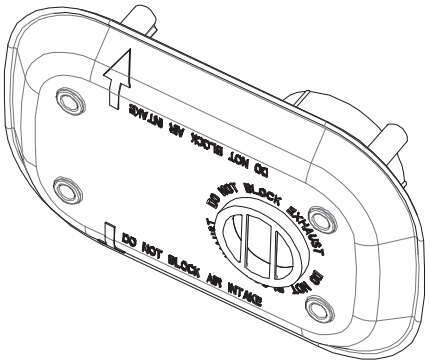

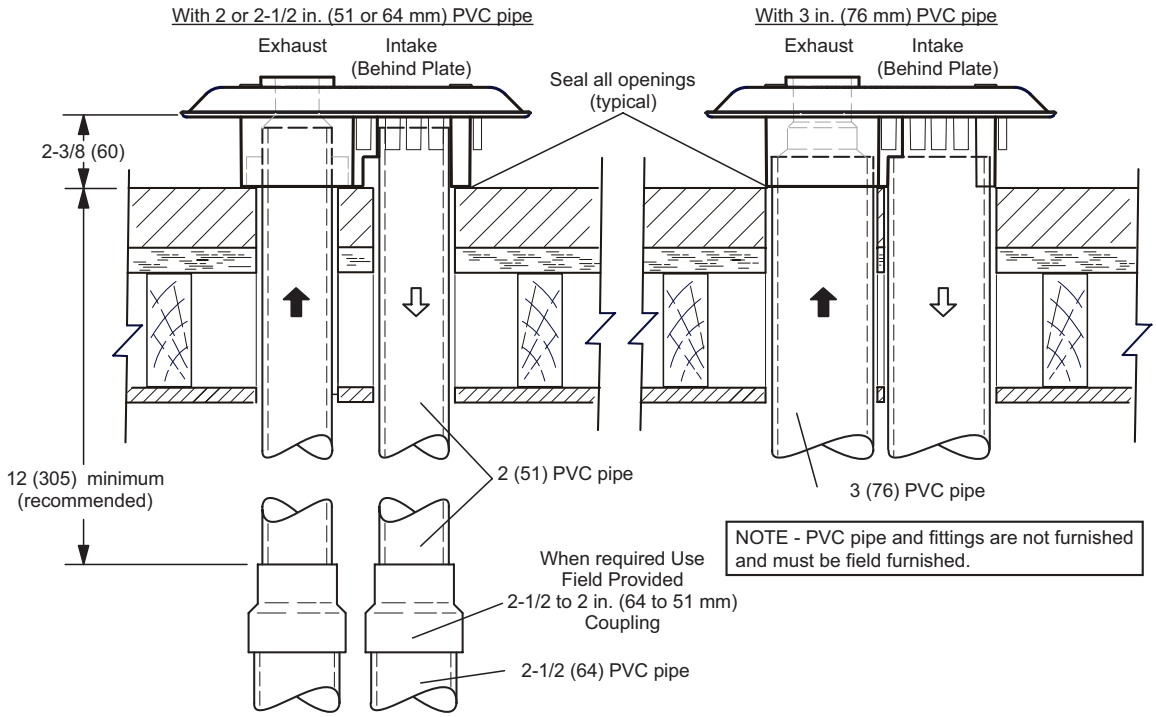

NOTE - PVC pipe and fittings are not furnished and must be field furnished.

MUFFLERS
15Y66 - 2-inch

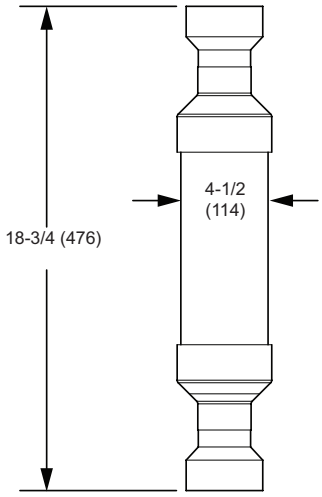

(Installed Vertically in the Exhaust Pipe)

CONCENTRIC WALL TERMINATION APPLICATIONS

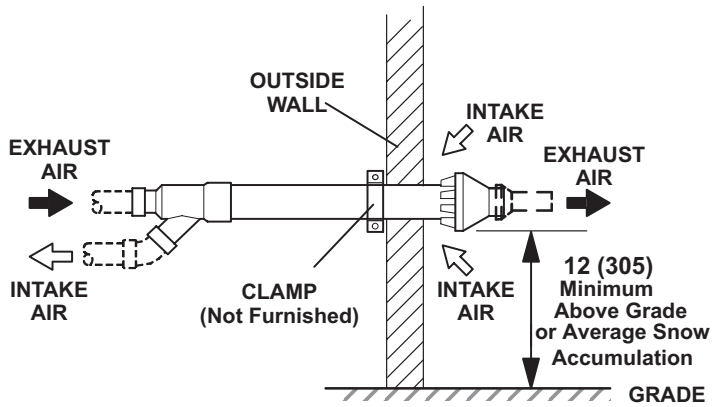

CONCENTRIC ROOF TERMINATION APPLICATIONS

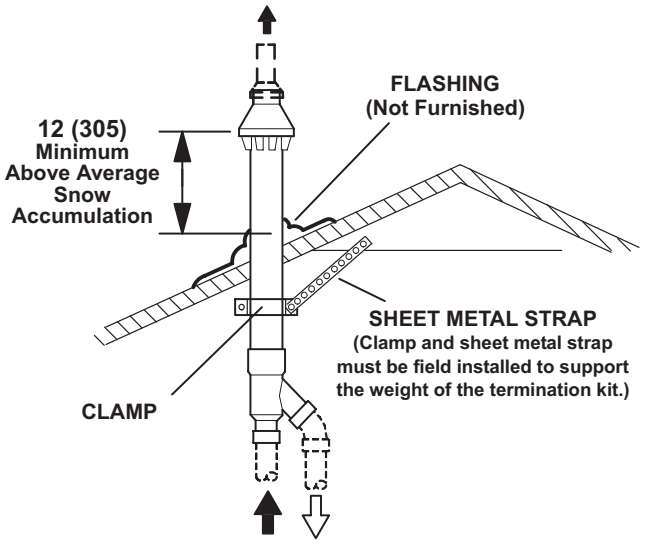

71M80 / 69M29 / 44W92 − 2 inch kits
60L46 / 44W93 − 3 inch kits
See Installation Instructions for additional information.

Note - Field provided reducer may be required to adapt different vent pipe sizes to termination.

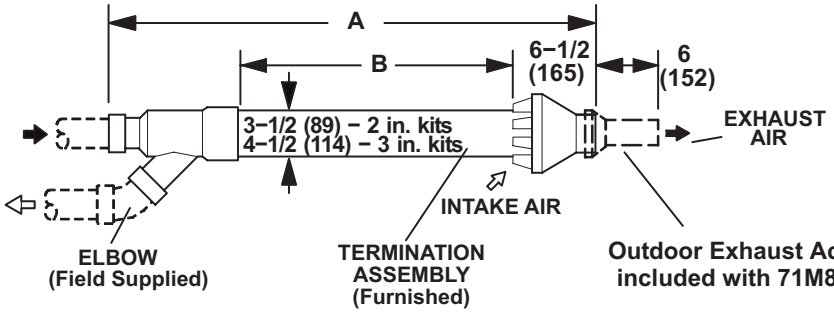

Cat. No.	A		B	
	in.	mm	in.	mm
71M80 69M29	33−3/8	848	16−3/4	425
44W92 (Canada)	29	737	15−1/2	394
60L46	38−7/8	987	21−3/16	538
44W93 (Canada)	36−1/8	918	19−1/2	495

NOTE − Typical illustration for dimensions only. Design may vary depending on kit ordered.

WALL TERMINATION KITS (CLOSE-COUPLE)
EXTENDED VENT FOR GRADE CLEARANCE
2 inch (51 mm) 22G44 (US)
3 inch (76 mm) 44J40 (US)
See Installation Instructions for additional information.

Note - Field provided reducer may be required to adapt different vent pipe sizes to termination.

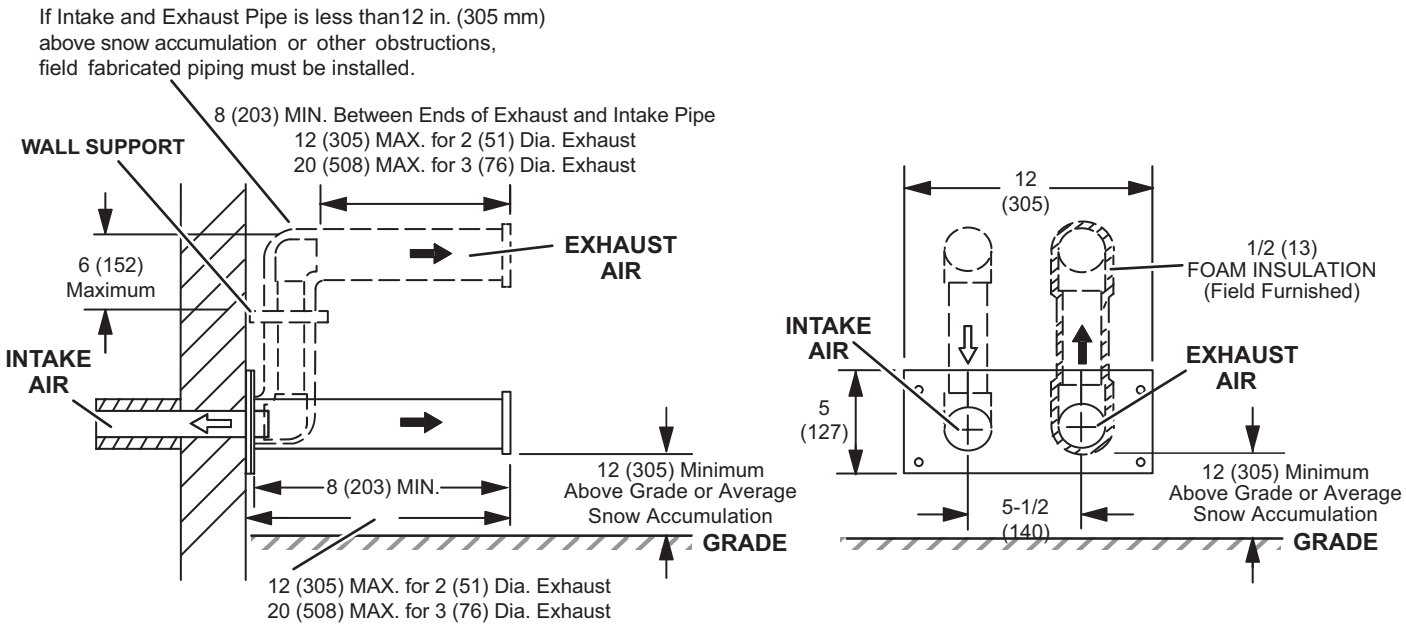

WALL TERMINATION KITS (CLOSE-COUPLE)
EXTENDED VENT FOR GRADE CLEARANCE
2 inch (51 mm) 30G28 (WTK Canada)
3 inch (76 mm) 81J20 (WTK Canada)
See Installation Instructions for additional information.

Note - Field provided reducer may be required to adapt different vent pipe sizes to termination.

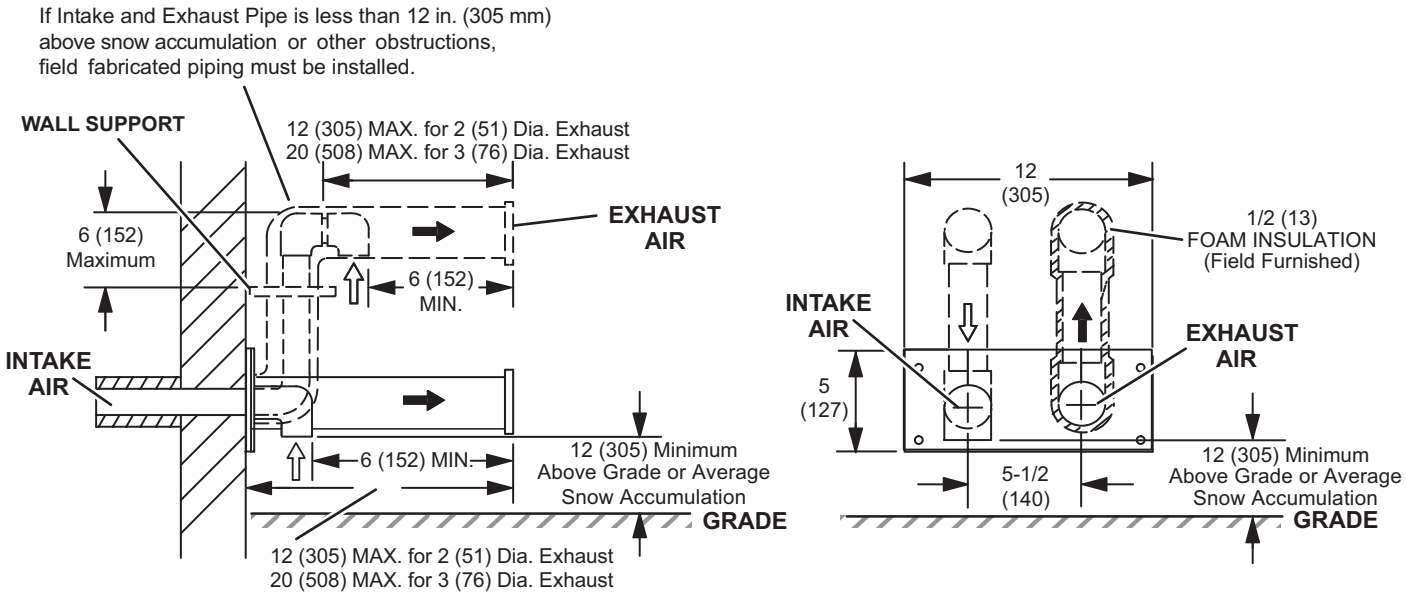

BLOWER DATA

ML196DF045XE36B PERFORMANCE (Less Filter)

External Static Pressure in. w.g.	Air Volume / Watts at Various Blower Speeds									
	High (Black)		Medium-High (Brown)		Medium (Blue)		Medium-Low (Yellow)		Low (Red)	
	cfm	Watts	cfm	Watts	cfm	Watts	cfm	Watts	cfm	Watts
0.00	1414	316	1259	229	1161	181	926	107	886	91
0.10	1385	331	1230	242	1125	192	890	113	843	98
0.20	1356	346	1201	255	1089	203	854	119	800	105
0.30	1327	359	1162	259	1058	212	814	127	761	110
0.40	1301	365	1136	267	1023	219	776	133	719	118
0.50	1270	376	1106	278	990	224	735	139	678	124
0.60	1239	377	1075	286	950	234	690	145	628	131
0.70	1179	368	1039	294	927	240	647	152	588	136
0.80	1098	347	1017	305	890	249	609	158	548	142
0.90	1011	326	967	305	862	257	574	164	513	148
1.00	892	296	879	286	817	262	538	171	476	155

ML196DF070XE48B PERFORMANCE (Less Filter)

External Static Pressure in. w.g.	Air Volume / Watts at Various Blower Speeds									
	High (Black)		Medium-High (Brown)		Medium (Blue)		Medium-Low (Yellow)		Low (Red)	
	cfm	Watts	cfm	Watts	cfm	Watts	cfm	Watts	cfm	Watts
0.00	1742	489	1524	333	1358	240	1262	198	1022	116
0.10	1712	502	1493	347	1320	251	1219	208	974	124
0.20	1682	516	1462	362	1282	262	1177	217	926	132
0.30	1650	529	1426	372	1244	273	1135	226	874	140
0.40	1619	541	1392	383	1204	281	1091	235	821	147
0.50	1592	556	1353	393	1161	290	1047	243	771	155
0.60	1542	554	1319	404	1121	299	1002	251	718	161
0.70	1484	546	1281	412	1078	308	959	260	659	168
0.80	1417	532	1245	423	1038	318	915	269	603	176
0.90	1341	514	1207	434	999	328	871	277	551	184
1.00	1232	485	1160	440	959	336	825	286	487	193

ML196DF090XE48C PERFORMANCE (Less Filter)

External Static Pressure in. w.g.	Air Volume / Watts at Various Blower Speeds									
	High (Black)		Medium-High (Brown)		Medium (Blue)		Medium-Low (Yellow)		Low (Red)	
	cfm	Watts	cfm	Watts	cfm	Watts	cfm	Watts	cfm	Watts
0.00	1749	369	1551	259	1435	207	1366	176	1235	143
0.10	1714	379	1510	269	1378	215	1302	185	1172	148
0.20	1679	389	1469	279	1321	223	1238	194	1109	153
0.30	1639	396	1436	287	1288	235	1201	206	1066	163
0.40	1604	408	1384	300	1232	241	1150	209	1014	171
0.50	1569	419	1343	305	1199	249	1106	225	954	176
0.60	1510	432	1298	315	1150	258	1051	232	917	185
0.70	1487	441	1260	323	1101	267	1003	232	862	191
0.80	1422	437	1218	332	1054	275	952	241	807	199
0.90	1321	416	1175	344	1012	283	904	249	749	207
1.00	1197	383	1124	349	970	291	861	259	694	215

BLOWER DATA

ML196DF110XE60C PERFORMANCE (Less Filter)

External Static Pressure in. w.g.	Air Volume / Watts at Various Blower Speeds									
	High (Black)		Medium-High (Brown)		Medium (Blue)		Medium-Low (Yellow)		Low (Red)	
	cfm	Watts	cfm	Watts	cfm	Watts	cfm	Watts	cfm	Watts
0.00	2217	662	1980	465	1828	355	1714	299	1531	218
0.10	2169	679	1929	479	1770	369	1656	308	1474	227
0.20	2121	697	1877	492	1712	383	1598	317	1417	236
0.30	2083	710	1835	502	1673	392	1543	330	1371	245
0.40	2038	721	1798	515	1627	403	1502	338	1315	253
0.50	2006	732	1747	528	1573	414	1449	351	1265	263
0.60	1966	743	1707	538	1527	420	1402	359	1197	272
0.70	1927	760	1667	547	1475	432	1352	368	1146	279
0.80	1890	767	1623	558	1434	445	1313	379	1093	288
0.90	1844	768	1575	568	1389	453	1254	388	1026	296
1.00	1728	750	1540	578	1337	463	1205	397	980	304

REVISIONS

Sections	Description of Change
Approvals	Updated ENERGY STAR® usage.

Visit us at www.Lennox.com
For the latest technical information, www.LennoxPros.com
Contact us at 1-800-4-LENNOX

NOTE - Due to Lennox' ongoing commitment to quality, Specifications, Ratings and Dimensions subject to change without notice and without incurring liability.
Improper installation, adjustment, alteration, service or maintenance can cause property damage or personal injury.
Installation and service must be performed by a qualified installer and servicing agency.

©2026 Lennox Industries, Inc.