CUT SIZE: 6-1/2" WIDE x 8-1/8" Tall

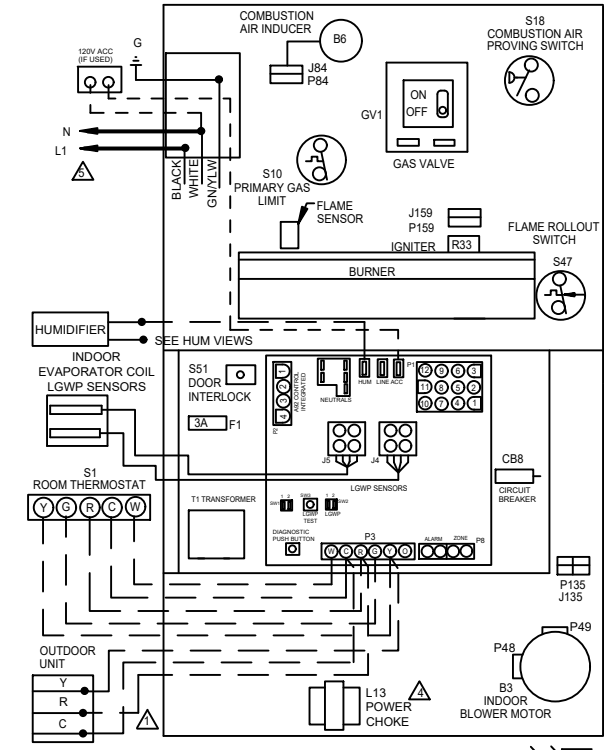


| BLOWER SPEED CHART | | | | |
|---|---|---|---|---|
| UNIT | FACTORY CONNECTED SPEED TAPS | | | |
| | COOL | HEAT | FAN | PARK |
| ALL | BLACK | YELLOW | RED | BROWN,BLUE |
| BLOWER SPEED SELECTION | | | | |
| | HI ← | | | → LO |
| SPEED TAPS | BLACK | BROWN | BLUE | YELLOW | RED |

| JACK/PLUG CHART | |
|---|---|
| J,P48 | JACK/PLUG-INDOOR BLOWER-POWER |
| J,P49 | JACK/PLUG-INDOOR BLOWER-SPD TAP |
| P1,P58 | JACK/PLUG-BURNER CONTROL |
| J,P84 | JACK/PLUG-COMB AIR INDUCER |
| J,P135 | JACK/PLUG-SECONDARY LIMIT (S) |
| P2,P156 | JACK/PLUG-INDUCER/IGNITER |
| J,P159 | JACK/PLUG-IGNITION |

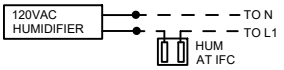


1. 'R' REQUIRED ON SOME OUTDOOR UNITS
2. PARK TERMINALS ARE UNPOWERED TERMINALS. ALL UNUSED MOTOR LEADS MUST BE WIRED TO A PARK TERMINAL.
3. DO NOT USE RED (LOW SPEED) MOTOR LEAD FOR HEATING SPEED RESULTING TEMPERATURE RISE WILL BE OUTSIDE OF RISE RANGE.
4. L13 POWER CHOKE USED ON ¾ AND 1 HP ONLY
5. USE COPPER CONDUCTORS ONLY.

NOTE-
IF ANY WIRE IN THIS APPLIANCE IS REPLACED,IT MUST BE REPLACED WITH WIRE OF LIKE SIZE, RATING,INSULATION THICKNESS AND TERMINATION.

THERMOSTAT HEAT ANTICIPATION SETTINGS

| | |
|---|---|
| .65 AMP | HONEYWELL VALVE |
| .50 AMP | WHITE-RODGERS VALVE |

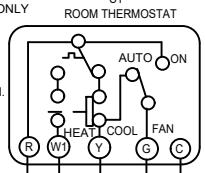


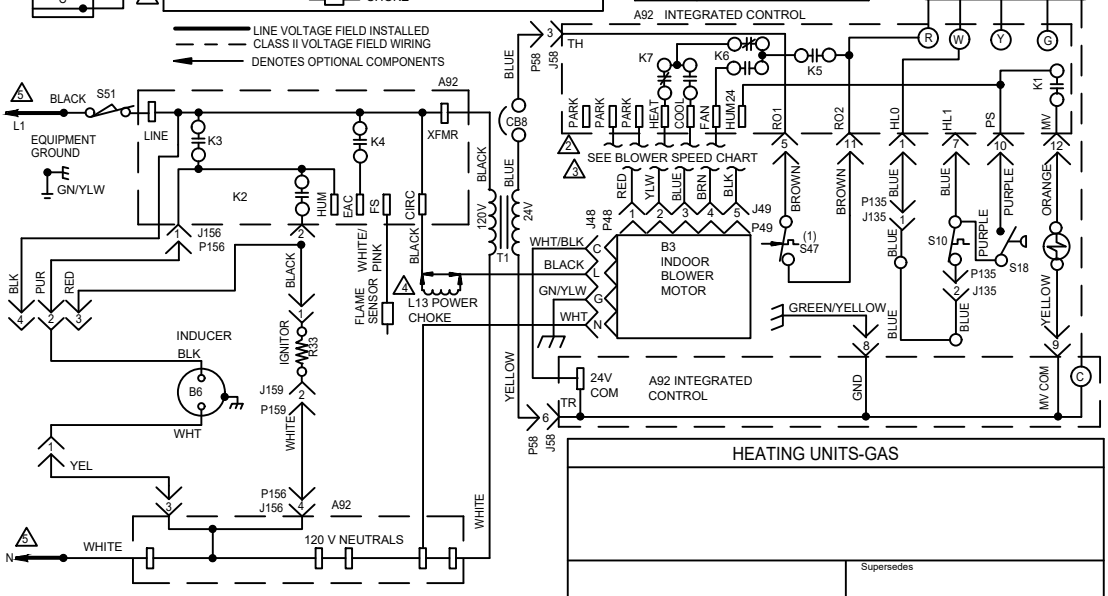


WARNING-
ELECTRIC SHOCK HAZARD,CAN CAUSE INJURY OR DEATH.UNIT MUST BE GROUNDED IN ACCORDANCE WITH NATIONAL AND LOCAL CODES.

HEATING UNITS-GAS

Supersedes

09/24

**Form No.**
**538480-01**

© 2011

Litho U.S.A.