© 2026

508671-01
10/2026
Supersedes 5/2025

INVERTER BYPASS KIT

INSTALLATION INSTRUCTIONS FOR INVERTER BYPASS KIT (609165−06; 37G66) USED WITH LGX/LCX/LHX/LGT/LDT078-152 UNITS

Shipping and Packing List

37G66

Package 1 of 1 contains:

- 1− K3 contactor
- 3− Harnesses
- 1− Mounting bracket
- 1− Bag assembly containing:
  - 2− #8−32 X ½ Thread forming screws
  - 3− Wire ties
  - 1− Wiring Diagram

Application

The inverter bypass kit is used on units equipped with an inverter driven (VFD) blower motor. The inverter bypass kit can be used to operate the unit in single speed (CAV) blower mode if the inverter needs to be serviced or is not immediately available for replacement.

⚠ CAUTION

As with any mechanical equipment, contact with sharp sheet metal edges can result in personal injury. Take care while handling this equipment and wear gloves and protective clothing.

⚠ WARNING

Improper installation, adjustment, alteration, service or maintenance can cause property damage, personal injury or loss of life. Installation and service must be performed by a licensed professional HVAC installer or equivalent, service agency, or the gas supplier.

Installation

Installation is shown in MSAV® mode, see FIGURE 1; the inverter is not bypassed. See Change to VFD Bypass section to operate unit in CAV mode. See FIGURE 2. Disconnect all power to unit.

1 - Install K3 blower contactor to under the TB13 terminal block using screws provided or self-tapping screws.

2 - Disconnect existing wire connect from TB13 to VFD and connect the high voltage harness as follow:

a. Connect the existing high voltage harness from TB13 terminal block to K3 contactor per wire markings.

b. Connect harness marked J249 and P249 to K3 contactor per wire markings.

3 - Locate low voltage harness marked K3-A1, A2 and connect leads marked K3-A1, A2 to the appropriate on K3. Remove the existing Ionizer harness at J392 and then connect low voltage harness in the kit from K3-A1, A2 to J392 of M4 Core Lite.

4 - Route wires as shown and secure to high voltage wires with wire ties provided.

TABLE 1

HARNESS IDENTIFICATION

Kit No.	Harness Type	Harness Part No.	Wire Markings
37G66	High Voltage	108626-01	K3-T1, T2, T3 P249
		108627-01	K3-L1, L2, L3 J249
	Low Voltage	108628-01	K3-A1, A2 P392-1, 3

1026
508671-01

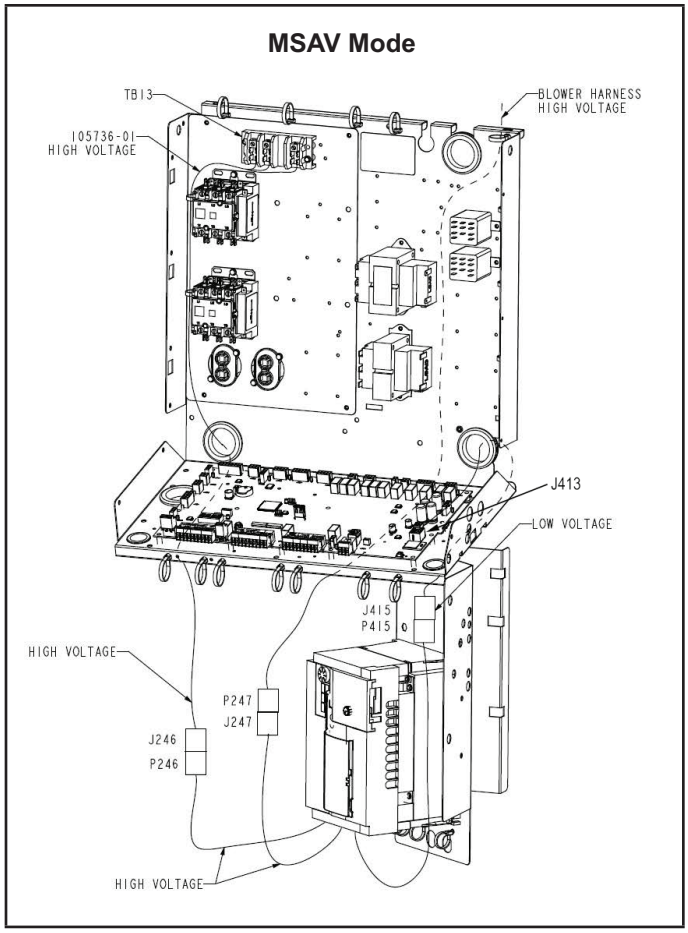

FIGURE 1. Factory Wiring

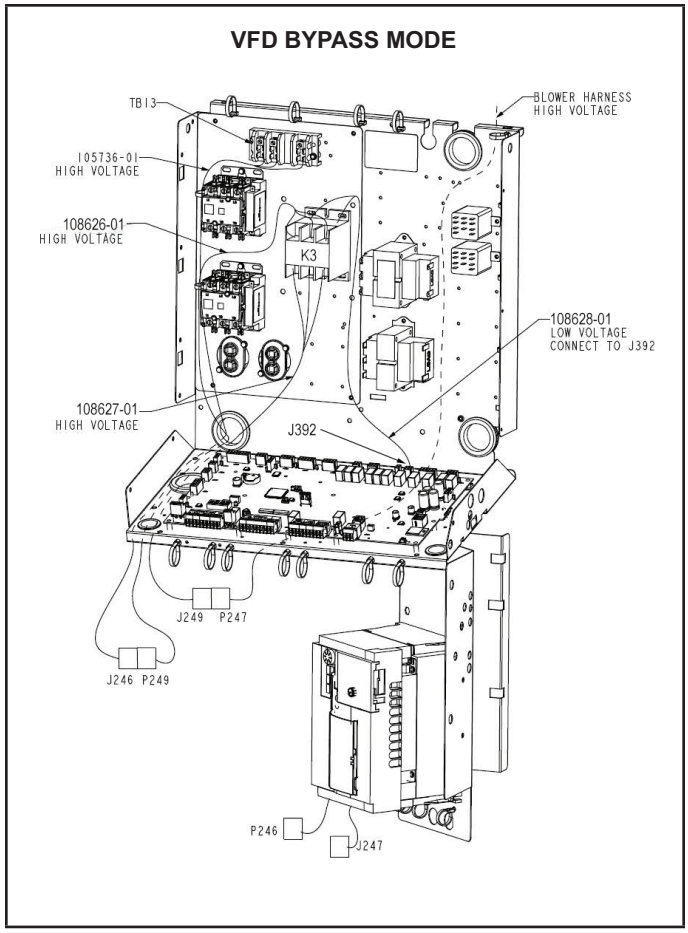

FIGURE 2. Inverter Bypass Installed Wiring

Change To VFD Bypassed - 078-152 Units

Use this section to bypass the VFD and operate unit in CAV mode. See FIGURE 2 and FIGURE 3.

1 - Disconnect all power to unit.

Low Voltage Changeover

2 - Disconnect P415 from J415.

High Voltage Changeover

3 - Disconnect P246 from J246.

4 - Disconnect P247 from J247.

5 - Connect J246 into P249 and Connect P247 into J249.

Belt Drive Blower Changeover

6 - Verify connections are made according to previous steps.

7 - Verify correct phasing of Blower motor.

8 - Restore power to unit.

Change To MSAV Mode - 078-152 Units

Use this section to return blower to inverter driven mode. See FIGURE 1.

1 - Disconnect all power to unit.

Low Voltage Changeover

2 - Remove harness connect K3 to J392.

3 - Reconnect the existing Ionizer Low Voltage harness.

4 - Connect P415 to J415

High Voltage Changeover

5 - Disconnect P247 from J249 and J246 from P249

6 - Connect P247 into J247.

7 - Connect J246 into P246.

Belt Drive Blower Changeover

8 - Verify connections are made according to previous steps.

9 - Verify correct phasing of Blower motor.

10 - Restore power to unit.

Configure M4 For VFD Bypass

Use the following mobile service app menu to configure the Unit Controller.

1 - RTU Options > Configuration IDs > CONFIGURATION ID 1

Set position 6 to the appropriate setting to enable the VFD Bypass:

M=Manual Bypass

2 - RTU Options > Blower > VFD Bypass

Activate the VFD Bypass by setting the toggle to Engaged.

NOTE - *Controllers must be upgraded to firmware version 09.02.0610 or later for VFD bypass activation to work properly.*

Rev 0
538583-01

AA BB CC DD EE FF

01

KEY LIST		
LOCATION	COMPONENT DESCRIPTION	
DD08	B3	MOTOR,BLOWER
DD06	K3	CONTACTOR,BLOWER
AA06	TB13	TERMINAL STRIP,POWER DISTRIBUTION

02

03

04

05

06

07

08

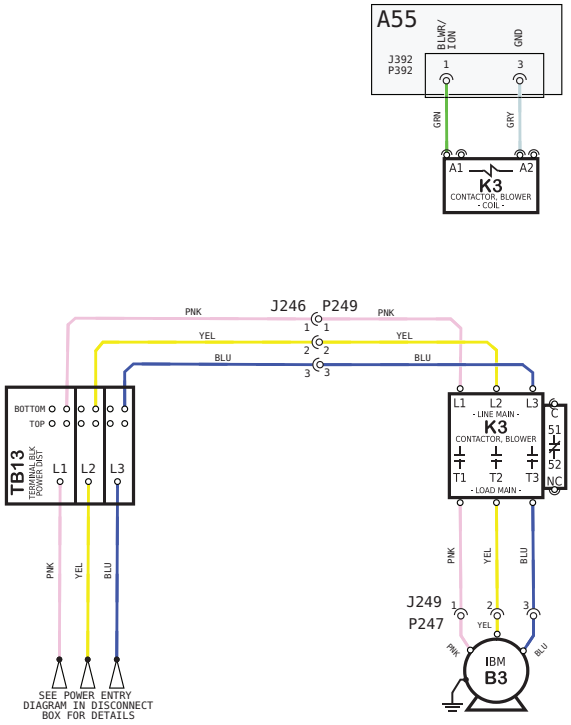

09

10

Model: LCX_LGX_LHX_092-150S
MSAV-VFD BYPASS KIT
Voltage: ALL VOLTAGES
Supersedes: N/A Form No: 538583-01 Rev: 0

© 2019

HEATING	COOLING	COOLING	ACCS	ACCS
SECTION A	SECTION B	SECTION B3/5	SECTION C	SECTION D

WIRING DIAGRAM FLOW

7x10
CUT SIZE

REV	EC NO.	DATE	BY	APVD	REVISION NOTE
---	CN-012332X	04-22-2025	ZN	MCF	ORIGINATED AT PD&R CARROLLTON, TX

FIGURE 3. Wiring Diagram