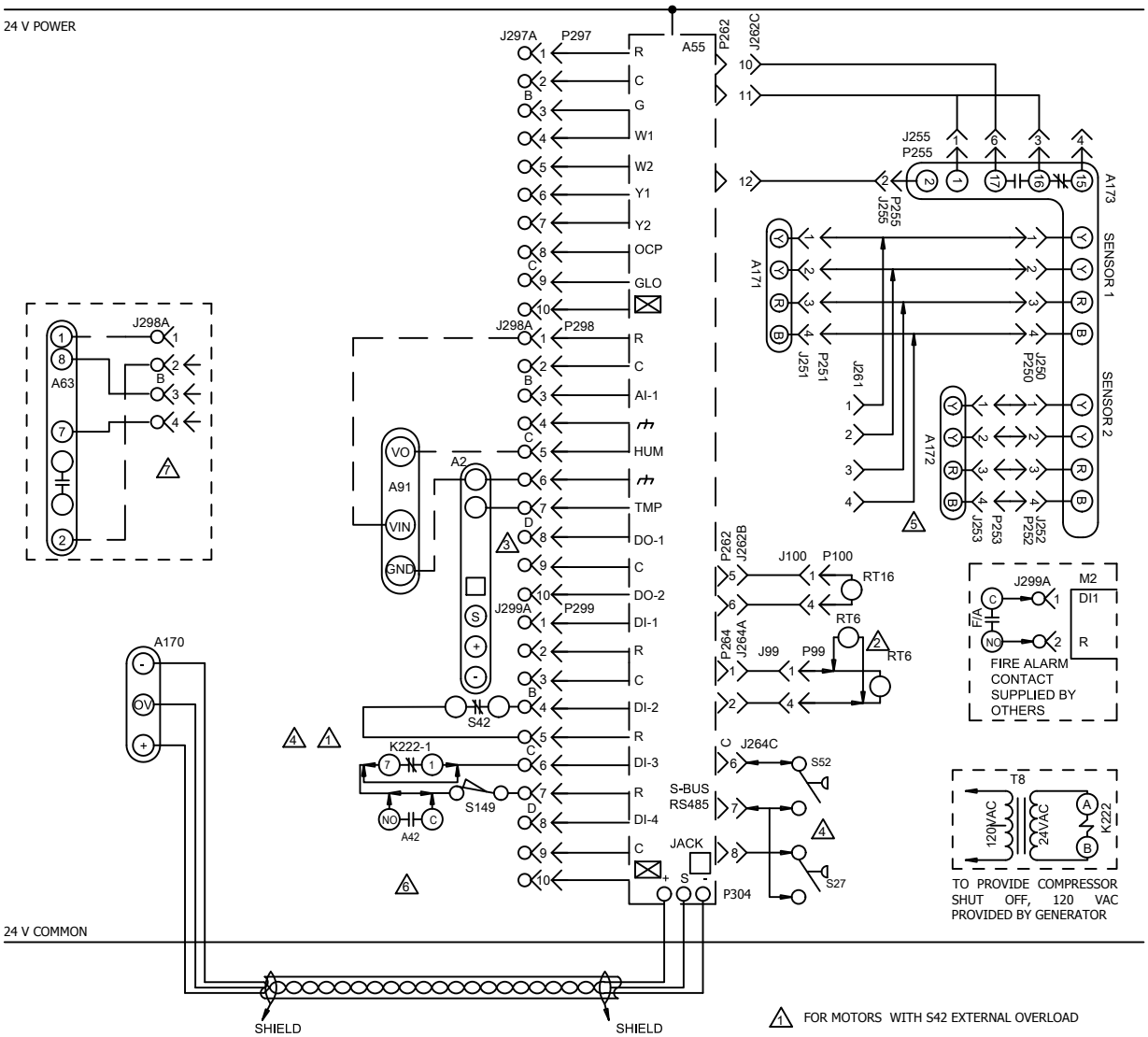

1. FOR MOTORS WITH S42 EXTERNAL OVERLOAD
2. REMOTE LOCATION OF RT6
3. P298-8 IS SERVICE RELAY OUTPUT (24VAC) IF USED CONNECT TO AN INDICATOR LIGHT
4. A55 SETTINGS MUST BE MODIFIED WHEN S42, S52 OR S149 ARE INSTALLED
5. CONNECT A172 SENSOR TO J261 ON SUPPLY AIR SMOKE DETECTOR ONLY
6. A42 USED ON 036 THROUGH 72 UNITS ONLY

KEY	COMPONENT
A2	SENSOR, ELECTRONIC THERMOSTAT
A55	PANEL, LENNOX MAIN PANEL
A63	SENSOR, CO2 (IAQ) OPTIONAL
A91	SENSOR, HUMIDITY
A170	CONTROL, NOVAR SE GATEWAY
A171	SENSOR ONE, SMOKE, RETURN AIR
A172	SENSOR TWO, SMOKE, SUPPLY AIR
A173	MODULE, CONTROL SMOKE DETECTION
J99	JACK, RT6 SUPPLY AIR SENSOR
J100	JACK, RT16 RETURN AIR SENSOR
J250	JACK, SMOKE DETECTOR ONE
J251	JACK, SMOKE DETECTOR ONE
J252	JACK, SMOKE DETECTOR TWO
J253	JACK, SMOKE DETECTOR TWO
J255	JACK, MODULE, CONTROL SMOKE DETECTION
J261	JACK, SUPPLY SMOKE DETECTOR JUMPER
J262	JACK, ECONOMIZER
J264	JACK, BLOWER DECK
J297	JACK, THERMOSTAT - DDC INTERFACE
J298	JACK, IAQ INTERFACE
J299	JACK, SAFETY INTERFACE
P99	PLUG, RT6 SUPPLY AIR SENSOR
P100	PLUG, RT16 RETURN AIR SENSOR
P250	PLUG, SMOKE DETECTOR ONE
P251	PLUG, SMOKE DETECTOR ONE
P252	PLUG, SMOKE DETECTOR TWO
P253	PLUG, SMOKE DETECTOR TWO
P255	PLUG, MODULE, CONTROL SMOKE DETECTION

P262	PLUG, ECONOMIZER
P264	PLUG, BLOWER DECK
P297	PLUG, THERMOSTAT - DDC INTERFACE
P298	PLUG, IAQ INTERFACE
P299	PLUG, SAFETY INTERFACE
P304	PLUG, SYS BUS
RT6	SENSOR, SUPPLY AIR TEMP
RT16	SENSOR, RETURN AIR TEMP
S27	SWITCH, FILTER
S52	SWITCH, AIRFLOW
S42	SWITCH, OVERLOAD RELAY BLOWER MOTOR LO
S149	SWITCH, OVERFLOW

DESIGNATES OPTIONAL WIRING
CLASS II FIELD WIRING

04/18	WIRING DIAGRAM 537987-01	04/18
ACCESSORIES		
CONTROL FOR STRATEGOS SERIES NOVAR GATEWAY		
SECTION C		REV. 0
Supersedes 537112-01	New Form No. 537987-01	